G0758Z Unique Parts

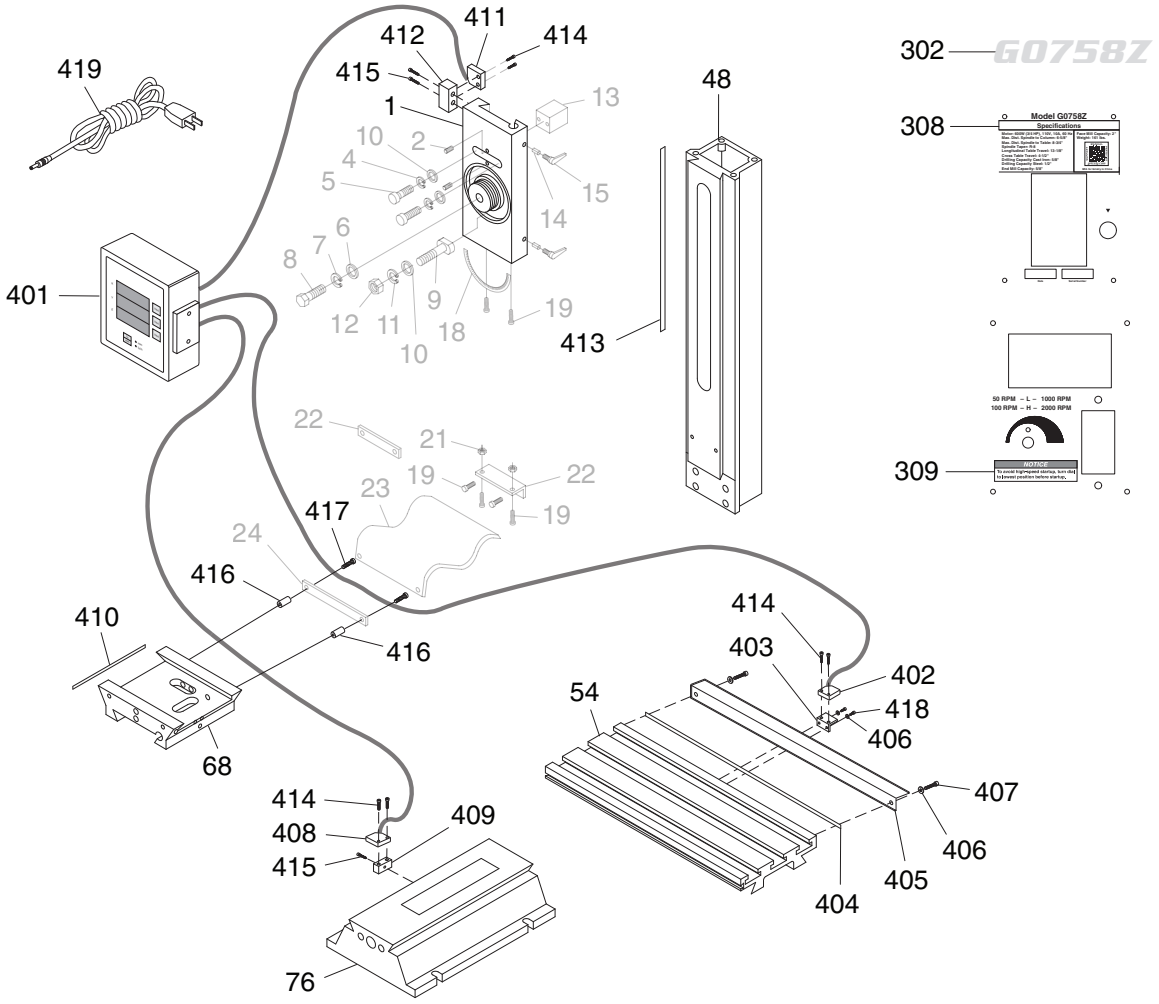

REF	PART #	DESCRIPTION
1	P0758Z001	Z-AXIS SLIDE
48	P0758Z048	COLUMN
54	P0758Z054	TABLE
68	P0758Z068	SADDLE
76	P0758Z076	BASE
302	P0758Z302	MODEL NUMBER LABEL
308	P0758Z308	MACHINE ID LABEL
309	P0758Z309	CONTROL PANEL LABEL
401	P0758Z401	DRO DISPLAY UNIT
402	P0758Z402	X-AXIS DRO SENSOR
403	P0758Z403	X-AXIS SENSOR MOUNTING BRACKET
404	P0758Z404	X-AXIS METALLIC STRIP 10 X 480MM
405	P0758Z405	ALUM BRACKET 30 X 480
406	P0758Z406	FLAT WASHER 4MM

REF	PART #	DESCRIPTION
407	P0758Z407	CAP SCREW M4-.7 X 8
408	P0758Z408	Y-AXIS DRO SENSOR
409	P0758Z409	Y-AXIS SENSOR MOUNTING BLOCK
410	P0758Z410	Y-AXIS METALLIC STRIP 10 X 150MM
411	P0758Z411	Z-AXIS DRO SENSOR
412	P0758Z412	Z-AXIS SENSOR MOUNTING BLOCK
413	P0758Z413	Z-AXIS METALLIC STRIP 10 X 390MM
414	P0758Z414	CAP SCREW M3-.5 X 16
415	P0758Z415	CAP SCREW M4-.7 X 16
416	P0758Z416	STEEL SLEEVE 5 X 18 X 33L
417	P0758Z417	CAP SCREW M5-.8 X 50
418	P0758Z418	CAP SCREW M4-.7 X 8
419	P0758Z419	DRO POWER CORD 2W 18G 72" 1-15P

SECTION 9: PARTS

Column

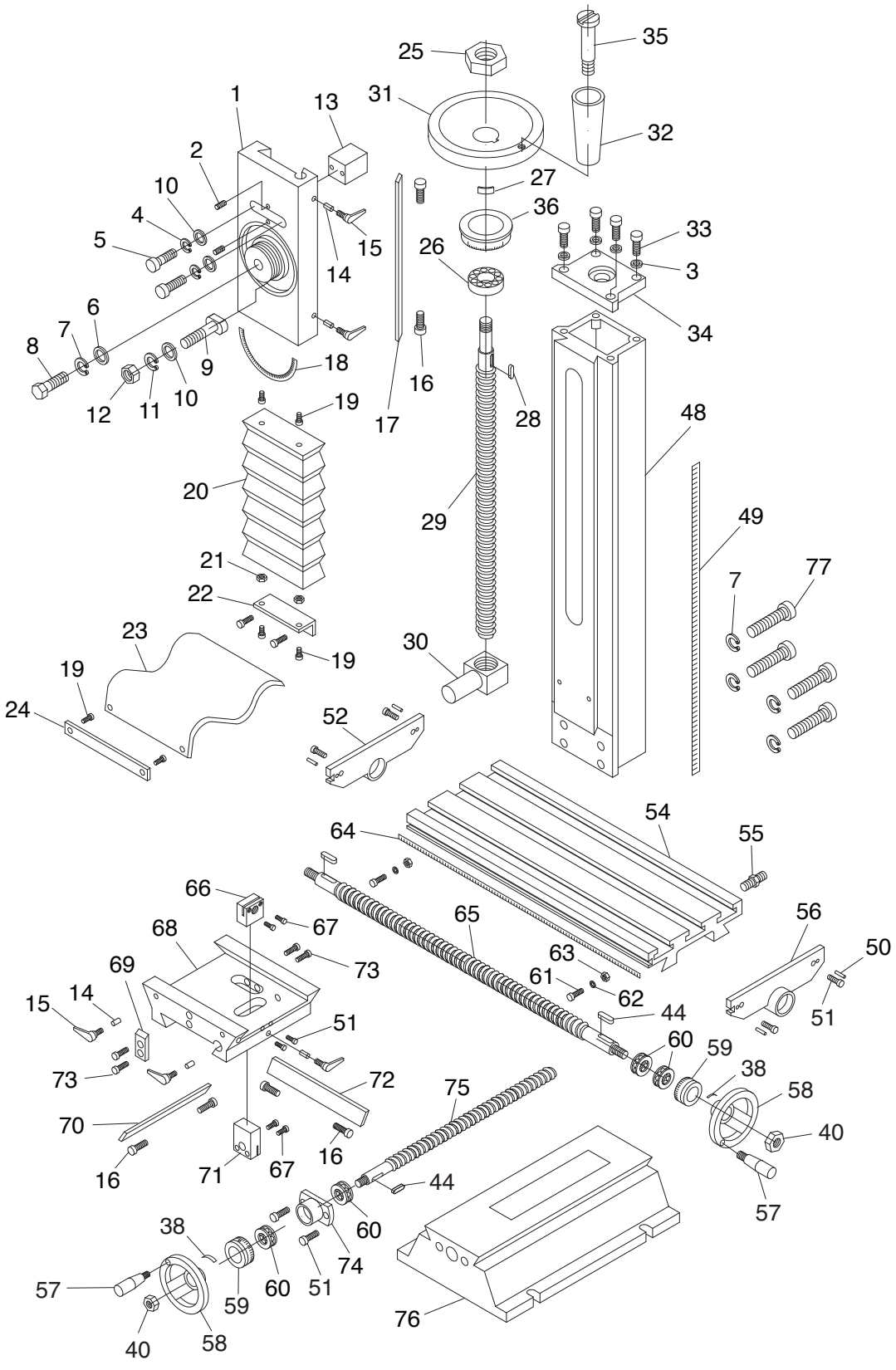

Column

REF	PART #	DESCRIPTION
1	P0758001	Z-AXIS SLIDE
2	P0758002	SET SCREW M6-1 X 16
3	P0758003	FLAT WASHER 6MM
4	P0758004	LOCK WASHER 8MM
5	P0758005	CAP SCREW M8-1.25 X 25
6	P0758006	FLAT WASHER 12MM
7	P0758007	LOCK WASHER 12MM
8	P0758008	CAP SCREW M12-1.75 X 40
9	P0758009	T-BOLT M8-1.25 X 60
10	P0758010	FLAT WASHER 8MM
11	P0758011	LOCK WASHER 8MM
12	P0758012	HEX NUT M8-1.25
13	P0758013	SLIDE ALIGNMENT BLOCK
14	P0758014	LOCK PLUNGER, BRASS
15	P0758015	ADJUSTABLE HANDLE M6-1 X 16
16	P0758016	GIB ADJUSTMENT SCREW
17	P0758017	Z-AXIS GIB
18	P0758018	HEADSTOCK ANGLE SCALE
19	P0758019	CAP SCREW M5-.8 X 10
20	P0758020	Z-AXIS WAY COVER
21	P0758021	HEX NUT M5-.8
22	P0758022	Z-AXIS WAY COVER BRACKET
23	P0758023	Y-AXIS WAY COVER
24	P0758024	Y-AXIS WAY COVER BRACKET
25	P0758025	HEX NUT M16-1.5
26	P0758026	THRUST BEARING 51200
27	P0758027	HANDWHEEL CURVED PLATE SPRING
28	P0758028	KEY 4 X 4 X 16
29	P0758029	Z-AXIS LEADSCREW
30	P0758030	Z-AXIS LEADSCREW NUT
31	P0758031	Z-AXIS HANDWHEEL
32	P0758032	HANDWHEEL HANDLE M6-1 X 10
33	P0758033	CAP SCREW M6-1 X 14
34	P0758034	COLUMN TOP COVER
35	P0758035	SHOULDER SCREW M6-1 X 60, 10
36	P0758036	Z-AXIS GRADUATED DIAL
38	P0758038	HANDWHEEL CURVED PLATE SPRING
40	P0758040	HEX NUT M8-1.25
44	P0758044	KEY 4 X 4 X 12
48	P0758048	COLUMN
49	P0758049	Z-AXIS SCALE
50	P0758050	THREADED SLEEVE M6-1 X 16
51	P0758051	CAP SCREW M6-1 X 14
52	P0758052	X-AXIS LEADSCREW BRACKET (LH)
54	P0758054	TABLE
55	P0758055	COOLANT HOSE FITTING
56	P0758056	X-AXIS LEADSCREW BRACKET (RH)
57	P0758057	TABLE HANDWHEEL HANDLE M6-1 X 10
58	P0758058	TABLE HANDWHEEL
59	P0758059	TABLE GRADUATED DIAL
60	P0758060	THRUST BEARING 51100
61	P0758061	CAP SCREW M6-1 X 10
62	P0758062	LIMIT STOP
63	P0758063	T-NUT M6-1
64	P0758064	X-AXIS SCALE
65	P0758065	X-AXIS LEADSCREW
66	P0758066	X-AXIS LEADSCREW NUT
67	P0758067	CAP SCREW M4-.7 X 20
68	P0758068	SADDLE
69	P0758069	TABLE STOP BLOCK
70	P0758070	Y-AXIS GIB
71	P0758071	Y-AXIS LEADSCREW NUT
72	P0758072	X-AXIS GIB
73	P0758073	CAP SCREW M6-1 X 25
74	P0758074	Y-AXIS BEARING HOUSING
75	P0758075	Y-AXIS LEADSCREW
76	P0758076	BASE
77	P0758077	CAP SCREW M12-1.75 X 90

Please Note: *We do our best to stock replacement parts whenever possible, but we cannot guarantee that all parts shown here are available for purchase. Call* ***(800) 523-4777*** *or visit our online parts store at* ***www.grizzly.com*** *to check for availability.*

Electrical Box

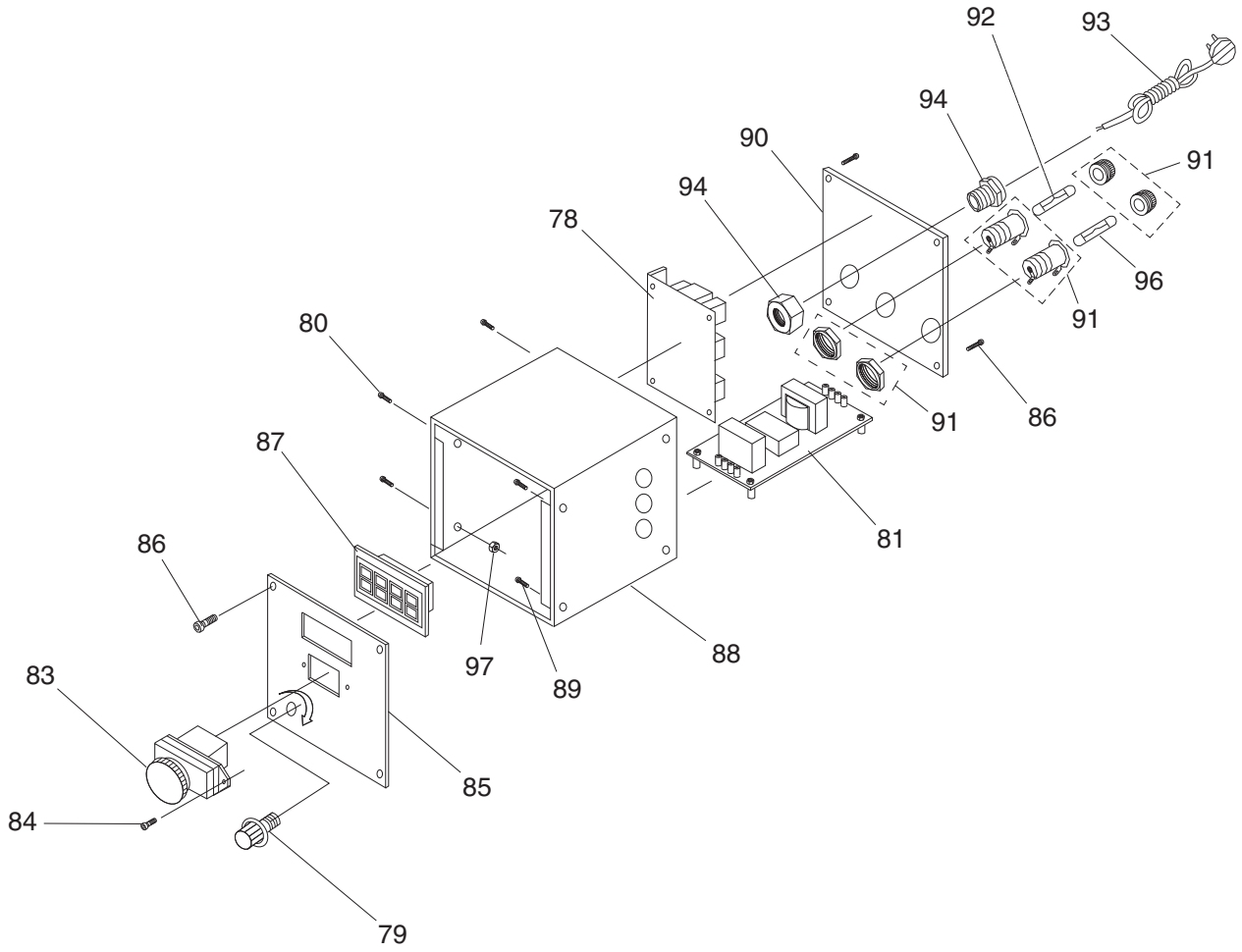

REF	PART #	DESCRIPTION
78	P0758078	CIRCUIT BOARD JD-014 5WR02J
79	P0758079	SPINDLE SPEED KNOB WX14-12
80	P0758080	CAP SCREW M3-.5 X 16
81	P0758081	CIRCUIT BOARD CESX 1101-28
83	P0758083	ON/OFF SWITCH KEDU KJD-17B/120V
84	P0758084	CAP SCREW M4-.7 X 10
85	P0758085	CONTROL PANEL PLATE
86	P0758086	CAP SCREW M4-.7 X 6
87	P0758087	RPM DIGITIAL DISPLAY ZD-SX-THL

REF	PART #	DESCRIPTION
88	P0758088	ELECTRICAL BOX
89	P0758089	CAP SCREW M5-.8 X 8
90	P0758090	ELECTRICAL BOX REAR COVER
91	P0758091	FUSE HOLDER
92	P0758092	FUSE 15A 250V FAST-ACTING, GLASS
93	P0758093	POWER CORD 16G 3W 72" 5-15
94	P0758094	STRAIN RELIEF M20 X 1.5 TYPE-3
96	P0758096	FUSE 10A 250V FAST-ACTING, GLASS
97	P0758097	HEX NUT M3-.5

Headstock

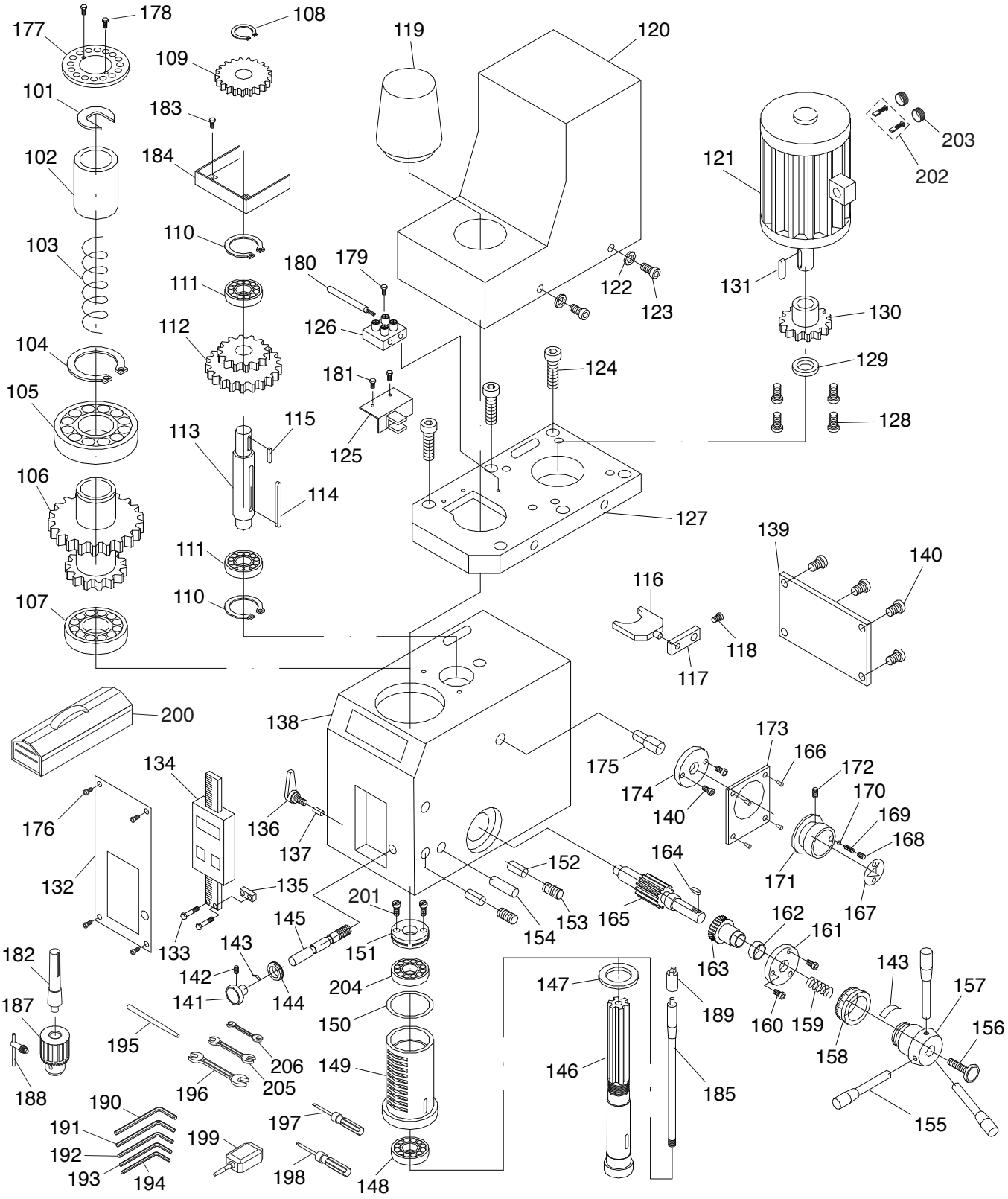

177
178
108
109
119
120
101
183
184
102
121
203
202
110
103
180
179
111
122
123
131
130
112
126
104
124
129
181
105
128
113
115
125
106
114
127
139
140
111
116
110
107
118
117
200
138
173
166
175
172
134
174
170
140
169
176
136
168
137
164
152
171
132
135
201
167
145
153
165
162
161
133
143
151
154
163
182
142
204
143
157
141
144
147
189
187
150
160
159
156
195
206
158
149
146
205
196
188
185
190
197
155
191
199
192
198
193
194
148

Headstock

REF	PART #	DESCRIPTION
101	P0758101	QUILL RETAINING CLIP
102	P0758102	BUSHING
103	P0758103	COMPRESSION SPRING 2.5 X 29 X 100
104	P0758104	EXT RETAINING RING 45MM
105	P0758105	BALL BEARING 6209ZZ
106	P0758106	COMBO GEAR 60/70T
107	P0758107	ANGULAR CONTACT BEARING 7007-2RS
108	P0758108	EXT RETAINING RING 15MM
109	P0758109	GEAR 37T
110	P0758110	EXT RETAINING RING 32MM
111	P0758111	BALL BEARING 6002ZZ
112	P0758112	COMBO GEAR 42/62T
113	P0758113	SHAFT
114	P0758114	KEY 5 X 5 X 50
115	P0758115	KEY 5 X 5 X 12
116	P0758116	FORK
117	P0758117	FORK ARM
118	P0758118	CAP SCREW M5-.8 X 8
119	P0758119	DRAWBAR CAP
120	P0758120	MOTOR COVER
121	P0758121	MOTOR 600W 110VDC
122	P0758122	FLAT WASHER 4MM
123	P0758123	CAP SCREW M4-.7 X 8
124	P0758124	CAP SCREW M6-1 X 14
125	P0758125	L-BRACKET
126	P0758126	SPEED SENSOR
127	P0758127	MOTOR MOUNT
128	P0758128	CAP SCREW M5-.8 X 12
129	P0758129	MOTOR GEAR RING
130	P0758130	GEAR 25T
131	P0758131	KEY 4 X 4 X 6
132	P0758132	HEADSTOCK FRONT PANEL PLATE
133	P0758133	HEX BOLT M3-.5 X 6
134	P0758134	Z-AXIS DRO ASSEMBLY
135	P0758135	DRO SLIDE MOUNT
136	P0758136	ADJUSTABLE HANDLE M6-1 X 16
137	P0758137	LOCK PLUNGER, BRASS
138	P0758138	HEADSTOCK CASTING
139	P0758139	HEADSTOCK REAR COVER
140	P0758140	CAP SCREW M4-.7 X 8
141	P0758141	FINE DOWNFEED KNOB
142	P0758142	SET SCREW M5-.8 X 6
143	P0758143	SPRING PIECE
144	P0758144	FINE DOWNFEED GRADUATED DIAL
145	P0758145	WORM SHAFT
146	P0758146	SPINDLE R8
147	P0758147	QUILL SEAL, RUBBER (LOWER)
148	P0758148	TAPERED ROLLER BEARING 32007
149	P0758149	QUILL
150	P0758150	QUILL SEAL, RUBBER (UPPER)
151	P0758151	PRELOAD ADJUSTER NUT
152	P0758152	DOWEL PIN 4 X 20, BRASS
153	P0758153	SET SCREW M5-.8 X 12

REF	PART #	DESCRIPTION
154	P0758154	DOWEL PIN 6 X 30
155	P0758155	COARSE DOWNFEED LEVER M10-1.5 X 14
156	P0758156	KNOB BOLT M8-1.25 X 30
157	P0758157	COARSE DOWNFEED HUB
158	P0758158	COURSE DOWNFEED GRADUATED DIAL
159	P0758159	COMPRESSION SPRING 1.2 X 12 X 2.5
160	P0758160	CAP SCREW M4-.7 X 40
161	P0758161	FLANGE
162	P0758162	BUSHING
163	P0758163	WORM GEAR
164	P0758164	KEY 4 X 4 X 12
165	P0758165	GEAR SHAFT 16T
166	P0758166	RIVET 2 X 5MM NAMEPLATE, STEEL
167	P0758167	HI/LO INDICATOR PLATE
168	P0758168	SET SCREW M8-1.25 X 8
169	P0758169	COMPRESSION SPRING 0.8 X 5 X 25
170	P0758170	STEEL BALL 6.5MM
171	P0758171	HI/LO HANDWHEEL
172	P0758172	SET SCREW M5-.8 X 16
173	P0758173	SPEED KNOB PLATE
174	P0758174	FORK SHAFT FLANGE
175	P0758175	FORK SHAFT
176	P0758176	CAP SCREW M3-.5 X 6
177	P0758177	SPINDLE RING 16MM
178	P0758178	CAP SCREW M3-.5 X 6
179	P0758179	HEX BOLT M3-.5 X 12
180	P0758180	SPEED SENSOR CORD
181	P0758181	HEX BOLT M3-.5 X 6
182	P0758182	DRILL CHUCK ARBOR R8 X B16
183	P0758183	CAP SCREW M3-.5 X 6
184	P0758184	GEAR GUARD
185	P0758185	DRAWBAR 7/16-20 X 9-7/8
187	P0758187	DRILL CHUCK B16 3-16MM
188	P0758188	DRILL CHUCK KEY 1/4" STD 11T SD-3/4"
189	P0758189	DRAWBAR RETAINER CAP
190	P0758190	HEX WRENCH 6MM
191	P0758191	HEX WRENCH 5MM
192	P0758192	HEX WRENCH 4MM
193	P0758193	HEX WRENCH 3MM
194	P0758194	HEX WRENCH 2.5MM
195	P0758195	SPINDLE PIN
196	P0758196	WRENCH 17 X 19MM OPEN-ENDS
197	P0758197	SCREWDRIVER FLAT #2
198	P0758198	SCREWDRIVER PHILLIPS #2
199	P0758199	BOTTLE FOR OIL
200	P0758200	TOOLBOX
201	P0758201	PRELOAD ADJUSTER SCREW M5-.8 X 10
202	P0758202	MOTOR CARBON BRUSH 2-PC SET
203	P0758203	MOTOR CARBON BRUSH CAP 1-PC
204	P0758204	TAPERED ROLLER BEARING 32005
205	P0758205	WRENCH 12 X 14MM OPEN-ENDS
206	P0758206	WRENCH 8 X 10MM OPEN-ENDS

Chip Guard

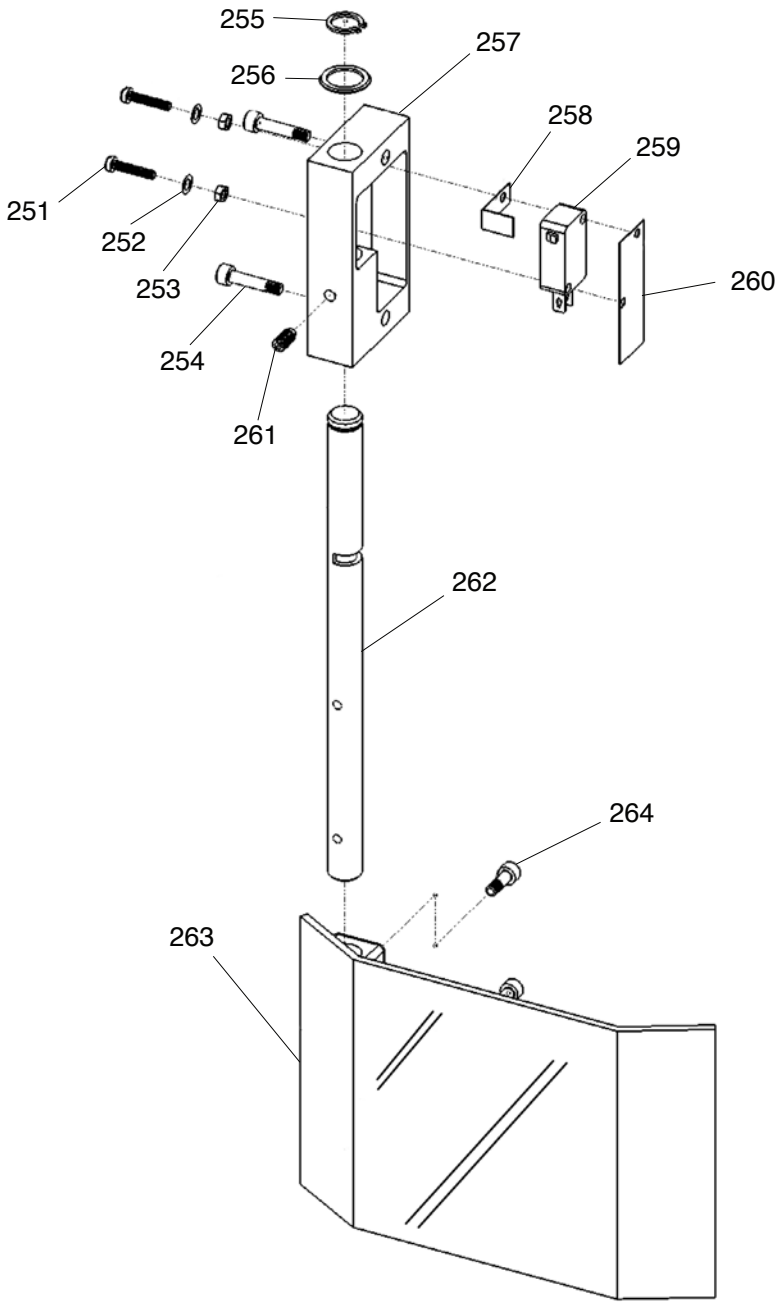

REF	PART #	DESCRIPTION
251	P0758251	CAP SCREW M3-.5 X 16
252	P0758252	FLAT WASHER 3MM
253	P0758253	HEX NUT M3-.5
254	P0758254	CAP SCREW M5-.8 X 15
255	P0758255	EXT RETAINING RING 12MM
256	P0758256	WAVY WASHER 20MM
257	P0758257	GUARD MOUNTING BLOCK

REF	PART #	DESCRIPTION
258	P0758258	LIMIT SWITCH L-BRACKET, COPPER
259	P0758259	LIMIT SWITCH DATER KW1-103
260	P0758260	PROTECTIVE PAPER
261	P0758261	SET SCREW M5-.8 X 10
262	P0758262	CHIP GUARD POST
263	P0758263	CHIP GUARD
264	P0758264	PHLP HD SCR M4-.7 X 10

Labels & Cosmetics

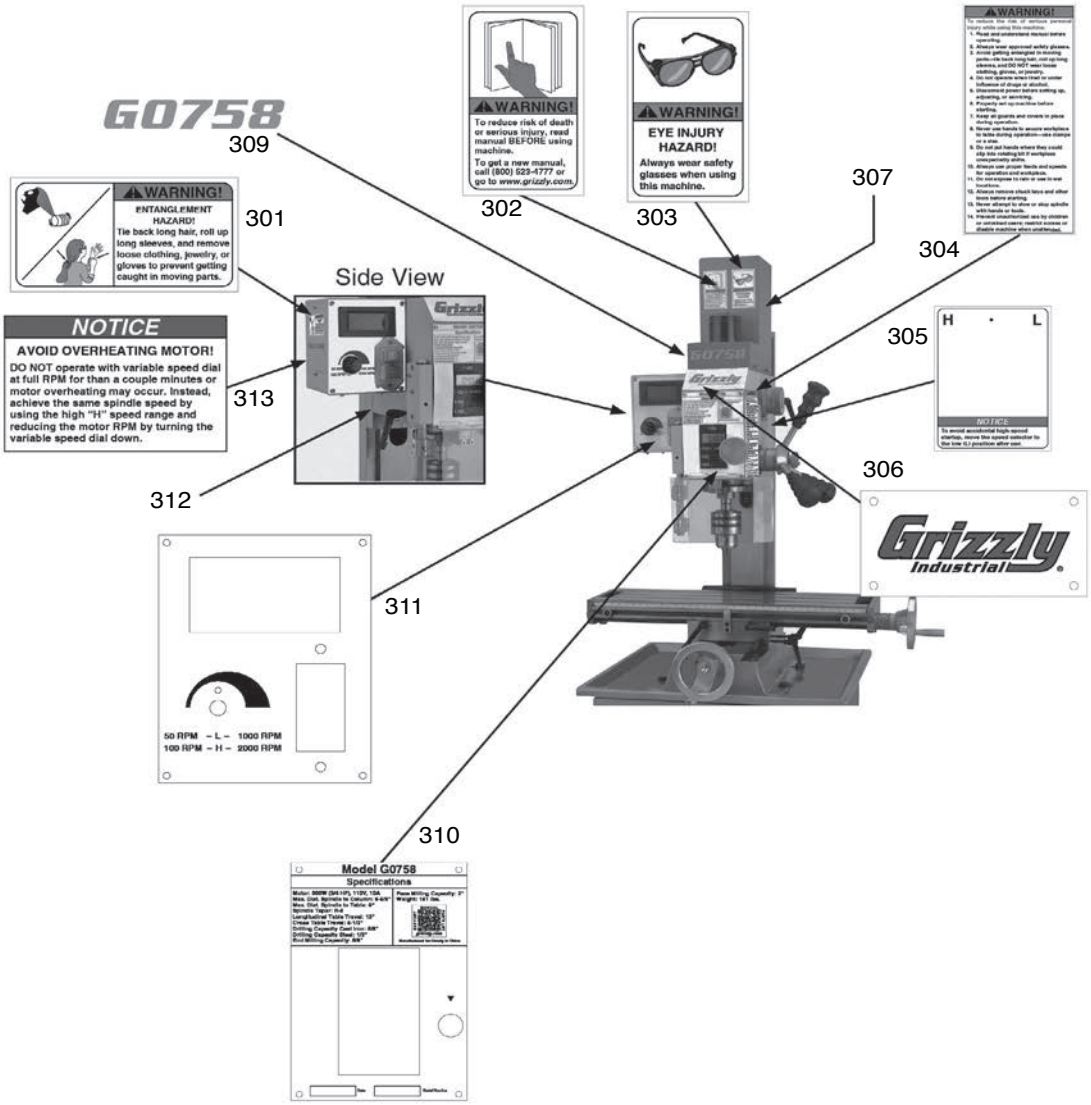

REF	PART #	DESCRIPTION
301	P0758301	ENTANGLEMENT HAZARD LABEL
302	P0758302	READ MANUAL LABEL
303	P0758303	EYE INJURY WARNING LABEL
304	P0758304	GENERAL WARNINGS LABEL
305	P0758305	HI/LO SPEED RANGE LABEL
306	P0758306	GRIZZLY INDUSTRIAL LABEL

REF	PART #	DESCRIPTION
307	P0758307	GRIZZLY GREEN TOUCH-UP PAINT
309	P0758309	MODEL NUMBER LABEL P-7535C
310	P0758310	MACHINE ID LABEL
311	P0758311	CONTROL PANEL LABEL
312	P0758312	GRIZZLY PUTTY TOUCH-UP PAINT
313	P0758313	AVOID OVERHEATING MOTOR LABEL

⚠WARNING

Safety labels help reduce the risk of serious injury caused by machine hazards. If any label comes off or becomes unreadable, the owner of this machine MUST replace it in the original location before resuming operations. For replacements, contact (800) 523-4777 or www.grizzly.com.