SECTION 9: PARTS

We do our best to stock replacement parts when possible, but we cannot guarantee that all parts shown are available for purchase. Call **(800) 523-4777** or visit **www.grizzly.com/parts** to check for availability.

Blast Cabinet

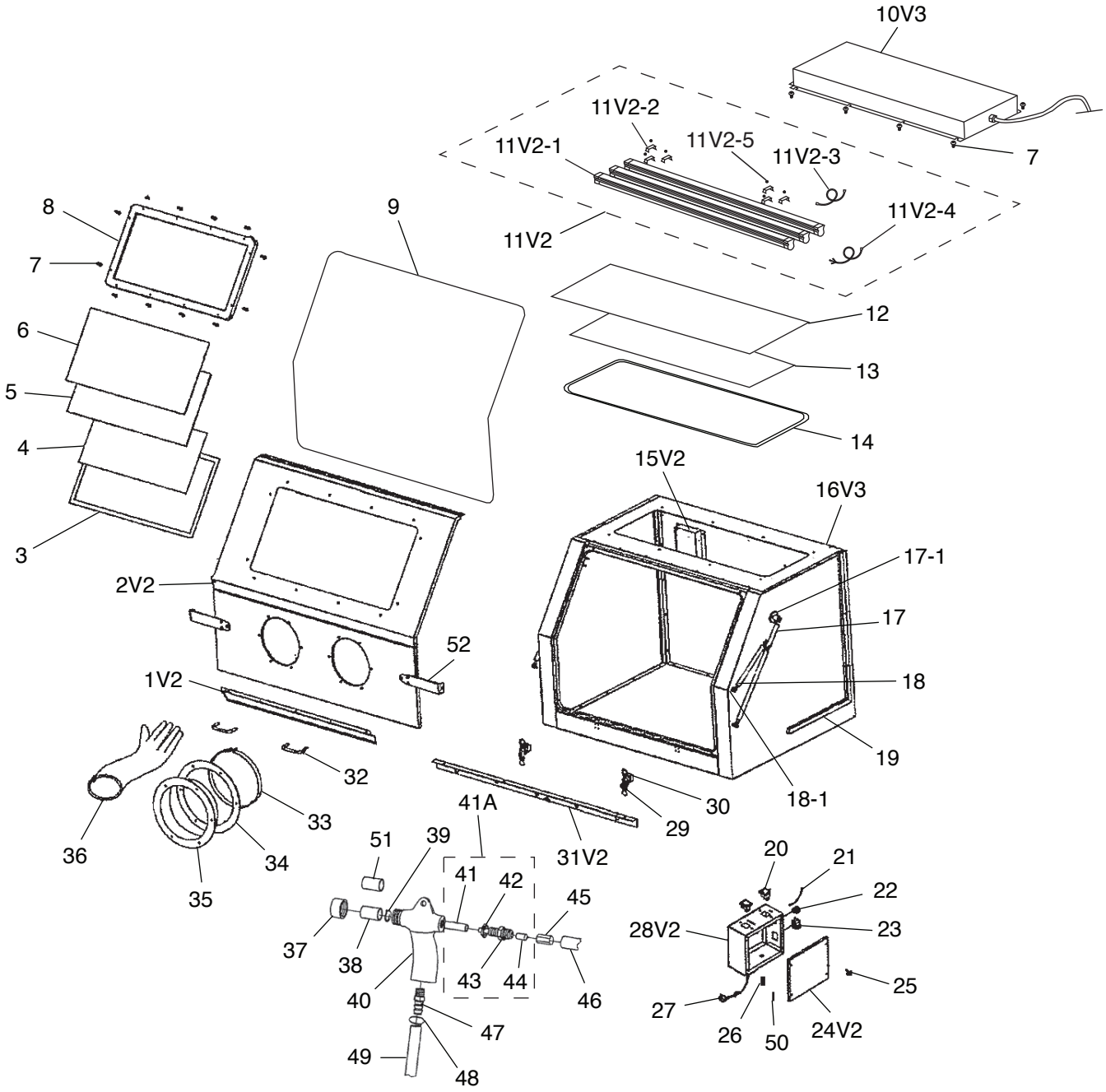

BUY PARTS ONLINE AT GRIZZLY.COM!
Scan QR code to visit our Parts Store.

Blast Cabinet Parts List

REF	PART #	DESCRIPTION
1V2	P0714001V2	HANGER BRACKET V2.03.24
2V2	P0714002V2	FRONT DOOR V2.03.24
3	P0714003	FRONT WINDOW SEAL
4	P0714004	FRONT WINDOW REPLACEMENT FILM
5	P0714005	INNER FRONT WINDOW
6	P0714006	OUTER FRONT WINDOW
7	P0714007	PHLP HD SCR M6-1 X 35
8	P0714008	FRONT WINDOW FRAME
9	P0714009	FRONT DOOR SEAL
10V3	P0714010V3	LIGHT COVER V3.03.24
11V2	P0714011V2	LED LIGHT ASSEMBLY V2.05.22
11V2-1	P0714011V2-1	LED 18W 36"
11V2-2	P0714011V2-2	LIGHT BRACKET
11V2-3	P0714011V2-3	LED 3-PIN CABLE
11V2-4	P0714011V2-4	MAIN LED CORD 20G 3W 8"
11V2-5	P0714011V2-5	RIVET 4 X 10MM BLIND
12	P0714012	LIGHT WINDOW
13	P0714013	LIGHT WINDOW PROTECT FILM
14	P0714014	LIGHT WINDOW SEAL
15V2	P0714015V2	VENT COVER V2.03.24
16V3	P0714016V3	BLAST CABINET V3.03.24
17	P0714017	FRONT DOOR SUPPORT
17-1	P0714017-1	SIDE ANCHOR POINT
18	P0714018	GAS SPRING
18-1	P0714018-1	SIDE ANCHOR POINT
19	P0714019	CORD RACEWAY
20	P0714020	ON/OFF SWITCH
21	P0714021	LIGHT CORD 16AWG 3C 5'
22	P0714022	WIRE CLIP
23	P0714023	ELECTRICAL RECEPTACLE 5-15

REF	PART #	DESCRIPTION
24V2	P0714024V2	SWITCH BOX COVER V2.03.24
25	P0714025	TAP SCREW M4 X 6
26	P0714026	FUSE HOLDER ASSEMBLY
27	P0714027	POWER CORD 14AWG 3C 6' 5-15
28V2	P0714028V2	SWITCH BOX V2.03.24
29	P0714029	LATCH
30	P0714030	LATCH BRACKET
31V2	P0714031V2	WORK HANGER V2.03.24
32	P0714032	FRONT DOOR HANDLE
33	P0714033	GLOVE CLAMP
34	P0714034	INNER GLOVE RING
35	P0714035	OUTER GLOVE RING
36	P0714036	GLOVE SET LEFT AND RIGHT
37	P0714037	NOZZLE CAP
38	P0714038	BLAST NOZZLE 6MM ID
39	P0714039	SEAL
40	P0714040	BLAST GUN BODY
41	P0714041	SLEEVE
41A	P0714041A	HOSE CONNECTOR 1/4" ASSEMBLY
42	P0714042	LOCK COLLAR
43	P0714043	HOSE CONNECTOR 1/4"
44	P0714044	QUICK CONNECTOR 12-G 1/4"
45	P0714045	ADAPTER
46	P0714046	AIR HOSE
47	P0714047	HOSE CONNECTOR 3/8"
48	P0714048	HOSE CLAMP
49	P0714049	SAND HOSE
50	P0714050	FUSE 15A 20 X 80MM
51	P0714051	BLAST NOZZLE 7MM ID

BUY PARTS ONLINE AT GRIZZLY.COM!
Scan QR code to visit our Parts Store.

Stand & Cabinet Base

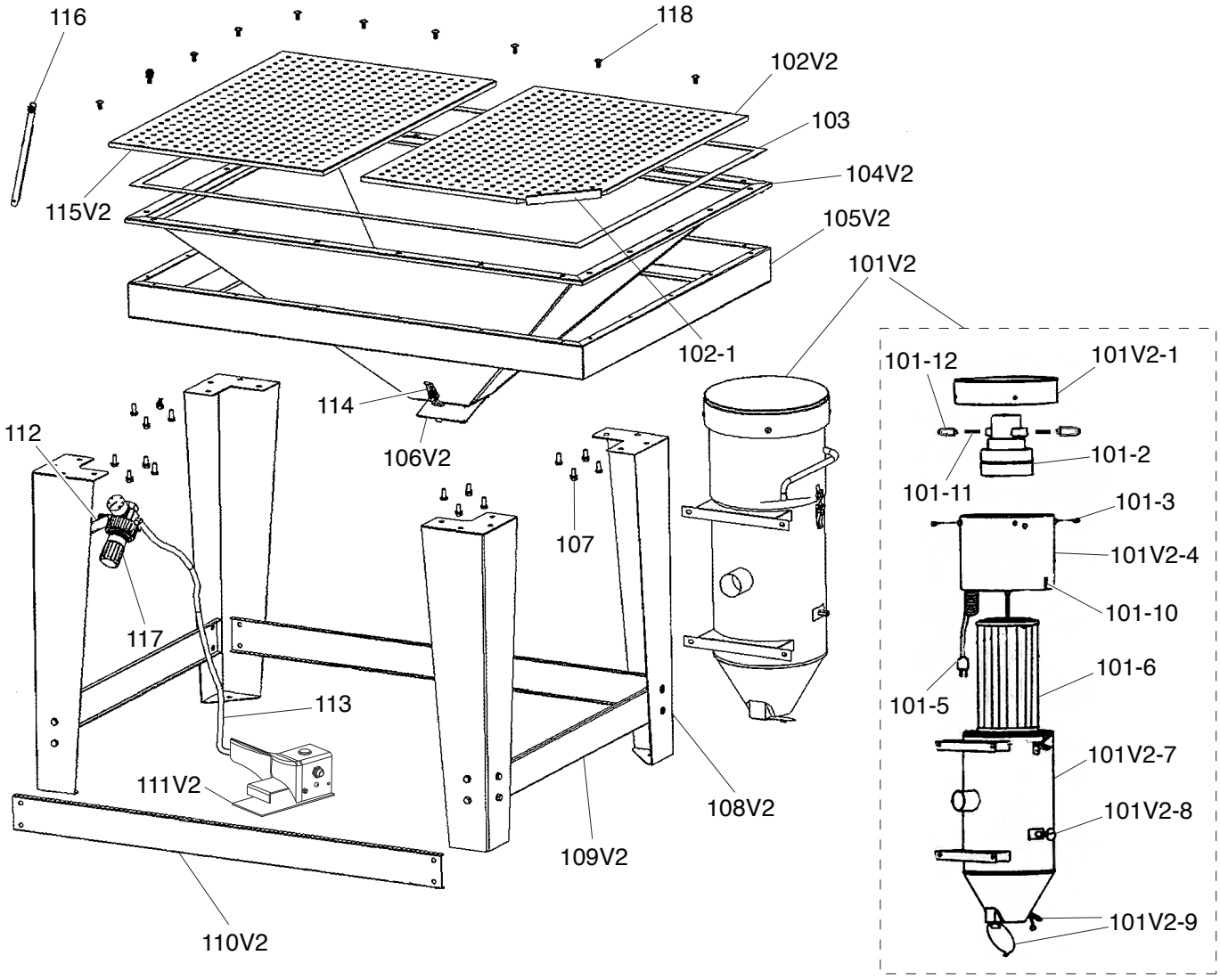

REF	PART #	DESCRIPTION
101V2	P0714101V2	DUST COLLECTOR ASSY V2.03.24
101V2-1	P0714101V2-1	MOTOR COVER
101-2	P0714101-2	MOTOR 1.5HP 110V 1-PH
101-3	P0714101-3	PHLP HD SCR M6-1 X 12
101V2-4	P0714101V2-4	FILTER HOUSING
101-5	P0714101-5	POWER CORD 14AWG 3C 4' 5-15
101-6	P0714101-6	CARTRIDGE FILTER 5 MICRON
101V2-7	P0714101V2-7	CANISTER
101V2-8	P0714101V2-8	CANISTER PLUNGER ASSEMBLY
101V2-9	P0714101V2-9	DOOR W/HINGE & LATCH ASSY
101-10	P0714101-10	HOUSING LATCH ASSEMBLY
101-11	P0714101-11	CARBON BRUSH SET 1-PAIR
101-12	P0714101-12	BRUSH HOLDER
102V2	P0714102V2	RIGHT WORK TABLE V2.03.24
102-1	P0714102-1	RUBBER PROTECTOR
103	P0714103	HOPPER SEAL

REF	PART #	DESCRIPTION
104V2	P0714104V2	HOPPER V2.03.24
105V2	P0714105V2	HOPPER SUPPORT V2.03.24
106V2	P0714106V2	HOPPER DUMP DOOR V2.03.24
107	P0714107	HEX BOLT M8-1.25 X 20
108V2	P0714108V2	LEG V2.03.24
109V2	P0714109V2	SHORT BRACE 32-1/4" V2.03.24
110V2	P0714110V2	LONG BRACE 43-3/4" V2.03.24
111V2	P0714111V2	FOOT VALVE ASSEMBLY V2.03.24
112	P0714112	AIR REGULATOR BRACKET
113	P0714113	AIR HOSE
114	P0714114	FUNNEL DRAIN DOOR LATCH
115V2	P0714115V2	LEFT WORK TABLE V2.03.24
116	P0714116	SUCTION TUBE
117	P0714117	AIR REGULATOR ASSEMBLY 0-125MPA
118	P0714118	PHLP HD SCR M6-1 X 16

BUY PARTS ONLINE AT GRIZZLY.COM!
Scan QR code to visit our Parts Store.

Labels & Cosmetics

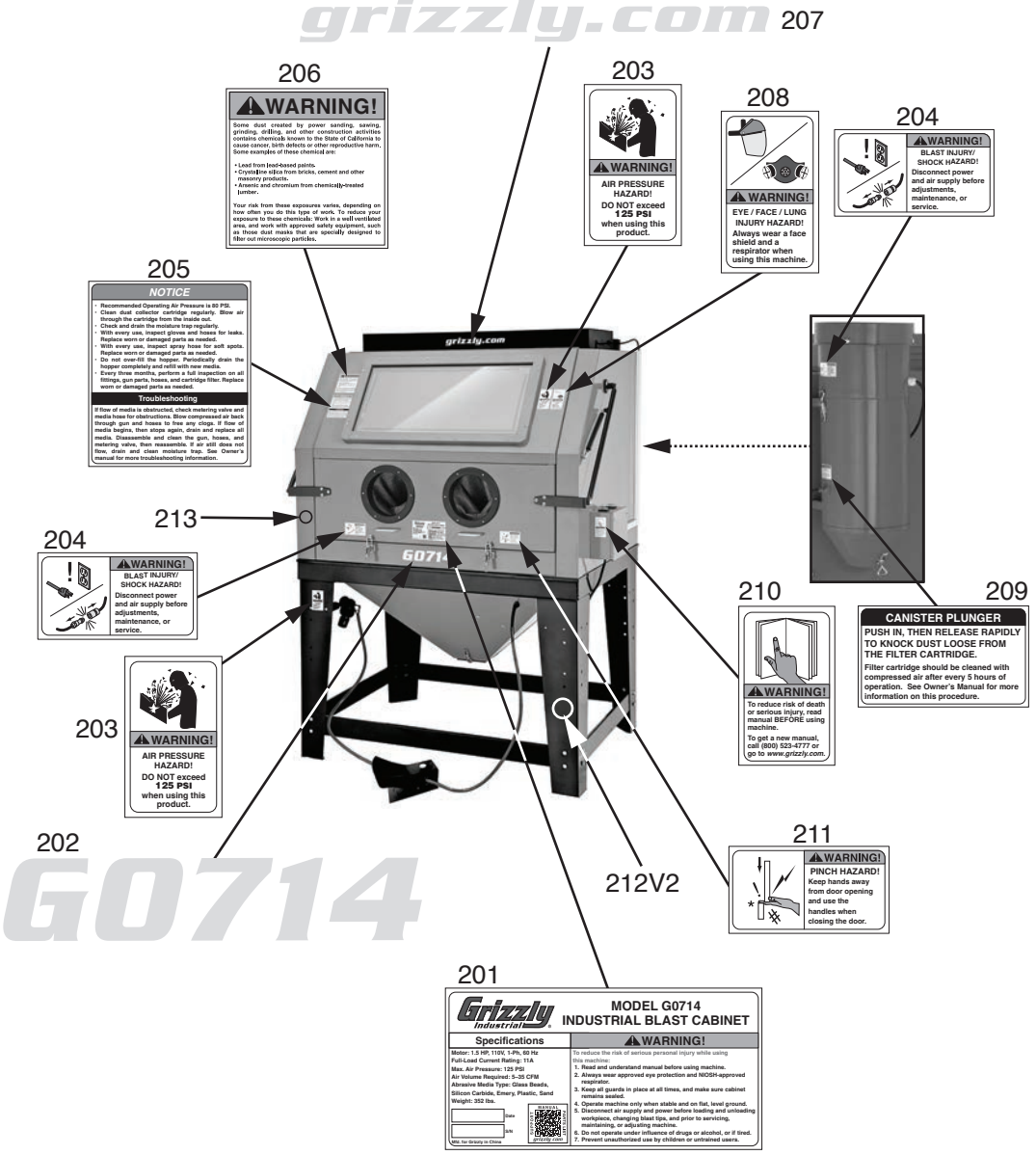

REF	PART #	DESCRIPTION
201	P0714201	MACHINE ID LABEL
202	P0714202	MODEL NUMBER LABEL
203	P0714203	AIR PRESSURE HAZARD LABEL
204	P0714204	DISCONNECT WARNING LABEL
205	P0714205	NOTICE/TROUBLESHOOTING LABEL
206	P0714206	DUST HAZARD WARNING LABEL
207	P0714207	GRIZZLY.COM LABEL

REF	PART #	DESCRIPTION
208	P0714208	GOGGLES/RESP. WARNING LABEL
209	P0714209	PLUNGER INSTRUCTION LABEL
210	P0714210	READ MANUAL LABEL
211	P0714211	PINCH HAZARD LABEL
212V2	P0714212V2	TOUCH-UP PAINT, GRIZZLY BLACK
213	P0714213	TOUCH-UP PAINT, GRIZZLY GREEN

⚠WARNING

Safety labels help reduce the risk of serious injury caused by machine hazards. If any label comes off or becomes unreadable, the owner of this machine MUST replace it in the original location before resuming operations. For replacements, contact (800) 523-4777 or www.grizzly.com.

BUY PARTS ONLINE AT GRIZZLY.COM!
Scan QR code to visit our Parts Store.