MODEL G0714
35" X 48" INDUSTRIAL BLAST CABINET
OWNER'S MANUAL
(For models manufactured since 03/24)



COPYRIGHT © NOVEMBER, 2010 BY GRIZZLY INDUSTRIAL, INC., REVISED MAY, 2024 (LW)
WARNING: NO PORTION OF THIS MANUAL MAY BE REPRODUCED IN ANY SHAPE OR FORM WITHOUT THE WRITTEN APPROVAL OF GRIZZLY INDUSTRIAL, INC.
#CR13399 PRINTED IN CHINA V5.05.24

******Keep for Future Reference******

⚠ WARNING!

This manual provides critical safety instructions on the proper setup, operation, maintenance, and service of this machine/tool. Save this document, refer to it often, and use it to instruct other operators.

Failure to read, understand and follow the instructions in this manual may result in fire or serious personal injury—including amputation, electrocution, or death.

The owner of this machine/tool is solely responsible for its safe use. This responsibility includes but is not limited to proper installation in a safe environment, personnel training and usage authorization, proper inspection and maintenance, manual availability and comprehension, application of safety devices, cutting/sanding/grinding tool integrity, and the usage of personal protective equipment.

The manufacturer will not be held liable for injury or property damage from negligence, improper training, machine modifications or misuse.

⚠ WARNING!

Some dust created by power sanding, sawing, grinding, drilling, and other construction activities contains chemicals known to the State of California to cause cancer, birth defects or other reproductive harm. Some examples of these chemicals are:

- **Lead from lead-based paints.**
- **Crystalline silica from bricks, cement and other masonry products.**
- **Arsenic and chromium from chemically-treated lumber.**

Your risk from these exposures varies, depending on how often you do this type of work. To reduce your exposure to these chemicals: Work in a well ventilated area, and work with approved safety equipment, such as those dust masks that are specially designed to filter out microscopic particles.

Table of Contents

INTRODUCTION 2
- Manual Accuracy 2
- Contact Info 2
- Machine Description 2
- Identification 3
- Machine Data Sheet 4

SECTION 1: SAFETY 6
- Safety Instructions for Machinery 6
- Additional Safety for Blast Cabinets 8

SECTION 2: POWER SUPPLY 9

SECTION 3: SETUP 11
- Needed for Setup 11
- Unpacking 11
- Inventory 12
- Site Considerations 13
- Mounting 14
- Air System Setup 15
- Pneumatic Diagram 16
- Assembly 17
- Test Run 21

SECTION 4: OPERATIONS 23
- Preparation 23
- Basic Operation 24
- Operation Tips 25
- Blasting Media 26

SECTION 5: ACCESSORIES 29

SECTION 6: MAINTENANCE 30
- Schedule 30
- Cleaning 30

SECTION 7: SERVICE 31
- Troubleshooting 31
- Filter Replacement 32
- Motor Brush Replacement 33
- LED Replacement 36

SECTION 8: WIRING 38
- Wiring Safety Instructions 38
- Wiring Diagram 39
- Wiring Components 40

SECTION 9: PARTS 41
- Blast Cabinet 41
- Stand & Cabinet Base 43
- Labels & Cosmetics 44

WARRANTY & RETURNS 45

INTRODUCTION

Manual Accuracy

We are proud to provide a high-quality owner's manual with your new machine!

We made every effort to be exact with the instructions, specifications, drawings, and photographs in this manual. Sometimes we make mistakes, but our policy of continuous improvement also means that **sometimes the machine you receive is slightly different than shown in the manual**.

If you find this to be the case, and the difference between the manual and machine leaves you confused or unsure about something, check our website for an updated version. We post current manuals and manual updates for free on our website at **www.grizzly.com**.

Alternatively, you can call our Technical Support for help. Before calling, make sure you write down the **manufacture date** and **serial number** from the machine ID label (see below). This information is required for us to provide proper tech support, and it helps us determine if updated documentation is available for your machine.

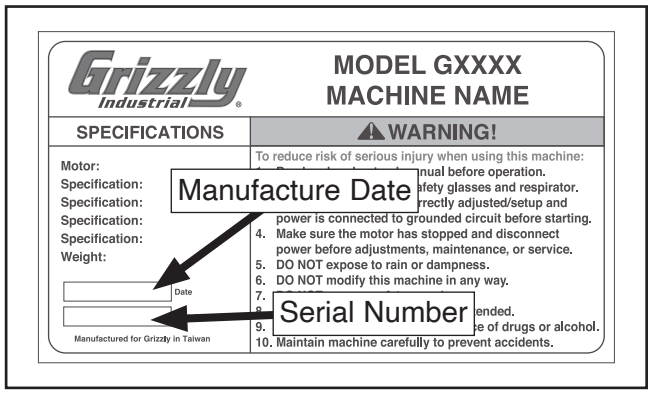

Contact Info

We stand behind our machines! If you have questions or need help, contact us with the information below. Before contacting, make sure you get the **serial number** and **manufacture date** from the machine ID label. This will help us help you faster.

Grizzly Technical Support
1815 W. Battlefield
Springfield, MO 65807
Phone: (570) 546-9663
Email: techsupport@grizzly.com

We want your feedback on this manual. What did you like about it? Where could it be improved? Please take a few minutes to give us feedback.

Grizzly Documentation Manager
P.O. Box 2069
Bellingham, WA 98227-2069
Email: manuals@grizzly.com

Machine Description

This blast cabinet is designed for high-use media blasting operations, where airflow up to 35 CFM and air pressure up to 125 PSI can be used. Air pressure is fully adjustable with an air pressure regulator, and the media output can be adjusted with the media flow valve. Blasting operations through a hand-held blast gun are controlled by a foot valve, and most operations can be carried out with all types of blasting media.

An internal set of LED lights provide illumination during blasting operations, and a built-in dust collector maintains blasting environment visibility. The front of the cabinet is equipped with a large gas-assisted folding door for easy workpiece loading and unloading. Media can be quickly unloaded through the hopper dump port and reloaded through the loading door.

Identification

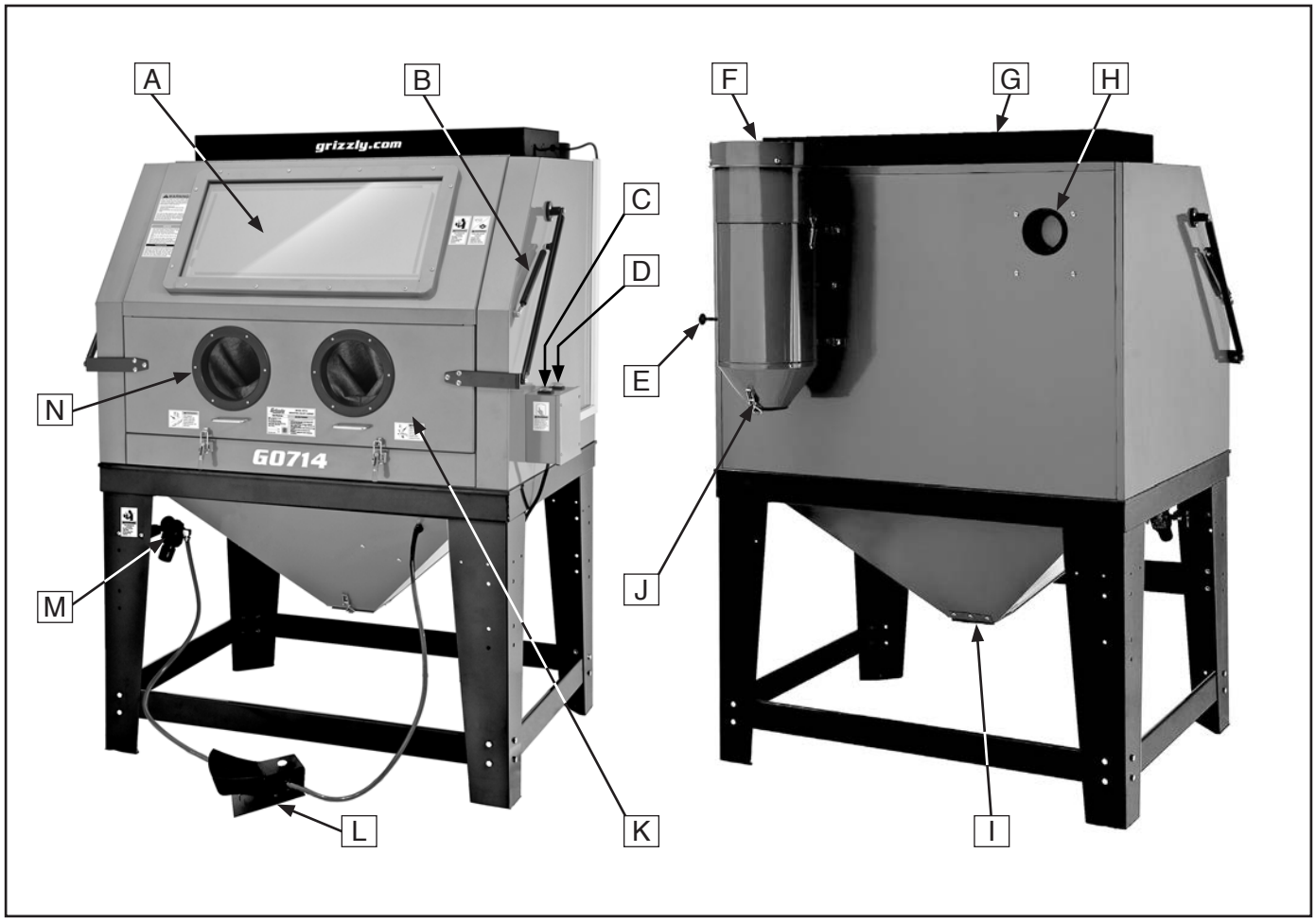

A. Viewing Window
B. Gas-Assisted Door Support System
C. DUST COLLECTOR ON/OFF Switch
D. LIGHT ON/OFF Switch
E. Filter Cleaning Plunger
F. Dust Collector
G. LED Light Assembly
H. Fresh Air Intake Port
I. Hopper Dump Port
J. Dust Collector Dump Port
K. Loading Door
L. Foot Valve for Blast Gun Control
M. Air Regulator w/Gauge
N. Blasting Gloves

MACHINE DATA SHEET

Customer Service #: (570) 546-9663 · To Order Call: (800) 523-4777 · Fax #: (800) 438-5901

MODEL G0714
35" X 48" INDUSTRIAL BLAST CABINET

Product Dimensions:

Weight	352 lbs.
Width (side-to-side) x Depth (front-to-back) x Height	51-1/2 x 47 x 69-1/2 in.
Footprint (Length x Width)	24 x 47-1/2 in.

Shipping Dimensions:

Type	Wood Box
Content	Machine
Weight	436 lbs.
Length x Width x Height	53 x 38 x 42 in.

Electrical:

Power Requirement	110V, Single-Phase, 60 Hz
Full-Load Current Rating	11A
Minimum Circuit Size	15A
Connection Type	Cord & Plug
Power Cord Included	Yes
Power Cord Length	72 in.
Power Cord Gauge	14 AWG
Plug Included	Yes
Included Plug Type	5-15
Switch Type	Sealed ON/OFF Rocker Switch
Number of Lights	3
Lighting Type	18W LED, 36 in.

Motors:

Main

Horsepower	1-1/2 HP
Phase	Single-Phase
Amps	11A
Type	Universal
Power Transfer	Direct
Bearings	Shielded & Permanently Lubricated

Main Specifications:

Operation Information

Suggested Operating Air Pressure Range	60 - 125 PSI
Maximum Air Pressure	125 PSI
Recommended Air Supply	5 - 35 CFM
Maximum Abrasive Capacity	250 lbs.
Suggested Abrasive Capacity	55 lbs.
Abrasive Type	Dry Only
Load & Unload Access	Front
Maximum Load Capacity	132 lbs.
Design Type	Floor
Blast Compartment Door	37-1/2 in. Wide x 29-1/4 in. Tall

Dust Collector Filter Information

Dimensions	6-3/4" Dia. x 12" Tall
Type	Pleated
Rating	5 Microns

Construction Information

Body	Welded Heavy-Duty Steel
Paint Type/Finish	Powder Coated

Other Specifications:

Country of Origin	China
Warranty	1 Year
Serial Number Location	ID Label
Assembly Time	60 Minutes

Features:

Front-Loading Door
Natural Rubber/Vinyl Blast Gloves
Blast Gun Includes 4 Ceramic Tips
Perforated Steel Work Table
Powder Coated Inside and Out
12-Gauge Steel Legs (16-Gauge Panels)
Extra-Rugged, Heavy-Duty Foot Valve Assembly
Internal LED Lighting System

SECTION 1: SAFETY

For Your Own Safety, Read Instruction Manual Before Operating This Machine

The purpose of safety symbols is to attract your attention to possible hazardous conditions. This manual uses a series of symbols and signal words intended to convey the level of importance of the safety messages. The progression of symbols is described below. Remember that safety messages by themselves do not eliminate danger and are not a substitute for proper accident prevention measures. Always use common sense and good judgment.

⚠DANGER **Indicates an imminently hazardous situation which, if not avoided, WILL result in death or serious injury.**

⚠WARNING **Indicates a potentially hazardous situation which, if not avoided, COULD result in death or serious injury.**

⚠CAUTION **Indicates a potentially hazardous situation which, if not avoided, MAY result in minor or moderate injury. It may also be used to alert against unsafe practices.**

NOTICE **Alerts the user to useful information about proper operation of the machine to avoid machine damage.**

Safety Instructions for Machinery

⚠WARNING

OWNER'S MANUAL. Read and understand this owner's manual BEFORE using machine.

TRAINED OPERATORS ONLY. Untrained operators have a higher risk of being hurt or killed. Only allow trained/supervised people to use this machine. When machine is not being used, disconnect power, remove switch keys, or lock-out machine to prevent unauthorized use—especially around children. Make your workshop kid proof!

DANGEROUS ENVIRONMENTS. Do not use machinery in areas that are wet, cluttered, or have poor lighting. Operating machinery in these areas greatly increases the risk of accidents and injury.

MENTAL ALERTNESS REQUIRED. Full mental alertness is required for safe operation of machinery. Never operate under the influence of drugs or alcohol, when tired, or when distracted.

ELECTRICAL EQUIPMENT INJURY RISKS. You can be shocked, burned, or killed by touching live electrical components or improperly grounded machinery. To reduce this risk, only allow qualified service personnel to do electrical installation or repair work, and always disconnect power before accessing or exposing electrical equipment.

DISCONNECT POWER FIRST. Always disconnect machine from power supply BEFORE making adjustments, changing tooling, or servicing machine. This prevents an injury risk from unintended startup or contact with live electrical components.

EYE PROTECTION. Always wear ANSI-approved safety glasses or a face shield when operating or observing machinery to reduce the risk of eye injury or blindness from flying particles. Everyday eyeglasses are NOT approved safety glasses.

⚠WARNING

WEARING PROPER APPAREL. Do not wear loose clothing, gloves, neckties, or jewelry that can become entangled in moving parts. Always tie back or cover long hair. Wear non-slip footwear to reduce risk of slipping and losing control or accidentally contacting cutting tool or moving parts.

HAZARDOUS DUST. Dust created by machinery operations may cause cancer, birth defects, or long-term respiratory damage. Be aware of dust hazards associated with each workpiece material. Always wear a NIOSH-approved respirator to reduce your risk.

HEARING PROTECTION. Always wear hearing protection when operating or observing loud machinery. Extended exposure to this noise without hearing protection can cause permanent hearing loss.

REMOVE ADJUSTING TOOLS. Tools left on machinery can become dangerous projectiles upon startup. Never leave chuck keys, wrenches, or any other tools on machine. Always verify removal before starting!

USE CORRECT TOOL FOR THE JOB. Only use this tool for its intended purpose—do not force it or an attachment to do a job for which it was not designed. Never make unapproved modifications—modifying tool or using it differently than intended may result in malfunction or mechanical failure that can lead to personal injury or death!

AWKWARD POSITIONS. Keep proper footing and balance at all times when operating machine. Do not overreach! Avoid awkward hand positions that make workpiece control difficult or increase the risk of accidental injury.

CHILDREN & BYSTANDERS. Keep children and bystanders at a safe distance from the work area. Stop using machine if they become a distraction.

GUARDS & COVERS. Guards and covers reduce accidental contact with moving parts or flying debris. Make sure they are properly installed, undamaged, and working correctly BEFORE operating machine.

FORCING MACHINERY. Do not force machine. It will do the job safer and better at the rate for which it was designed.

NEVER STAND ON MACHINE. Serious injury may occur if machine is tipped or if the cutting tool is unintentionally contacted.

STABLE MACHINE. Unexpected movement during operation greatly increases risk of injury or loss of control. Before starting, verify machine is stable and mobile base (if used) is locked.

USE RECOMMENDED ACCESSORIES. Consult this owner's manual or the manufacturer for recommended accessories. Using improper accessories will increase the risk of serious injury.

UNATTENDED OPERATION. To reduce the risk of accidental injury, turn machine ***OFF*** and ensure all moving parts completely stop before walking away. Never leave machine running while unattended.

MAINTAIN WITH CARE. Follow all maintenance instructions and lubrication schedules to keep machine in good working condition. A machine that is improperly maintained could malfunction, leading to serious personal injury or death.

DAMAGED PARTS. Regularly inspect machine for damaged, loose, or mis-adjusted parts—or any condition that could affect safe operation. Immediately repair/replace BEFORE operating machine. For your own safety, DO NOT operate machine with damaged parts!

MAINTAIN POWER CORDS. When disconnecting cord-connected machines from power, grab and pull the plug—NOT the cord. Pulling the cord may damage the wires inside. Do not handle cord/plug with wet hands. Avoid cord damage by keeping it away from heated surfaces, high traffic areas, harsh chemicals, and wet/damp locations.

EXPERIENCING DIFFICULTIES. If at any time you experience difficulties performing the intended operation, stop using the machine! Contact our Technical Support at (570) 546-9663.

Additional Safety for Blast Cabinets

⚠WARNING

PERSONAL PROTECTION EQUIPMENT. Media blasting presents a real hazard of silicosis and other lung contamination injuries! These injuries are permanent and can get worse over time. If you use media blasting equipment without the proper hood, eye protection, and respirator, your lungs and eyes may become permanently damaged. Protect yourself correctly, and keep all unprotected bystanders away. For the latest types of protective equipment and acceptable respirator types, contact your local OSHA or NIOSH office.

WORK AREA SAFETY. To prevent accidental contamination of shop air, clean dust collector and filters often, and repair any suction hose leaks immediately.

MAINTAINING MACHINE. To prevent accidental contamination of shop air, check the blast cabinet for any leaks before use, and reseal immediately.

AVOIDING ENTRAPMENT. To prevent an entrapment hazard for animals or children, always close and latch the blast cabinet door when not in use.

LEAVING THE AREA. To prevent accidental blasting injury, disconnect air supply when leaving the blast cabinet.

MAINTAINING COMPONENTS. To prevent accidental contamination or blast injury, replace tips, hoses, lenses, and gloves when they become worn.

SAFE MEDIA BLASTING. Do not use system over the rated PSI or lines and seals may burst and cause injury.

SAFE MAINTENANCE. To prevent accidental blasting injury or shock, disconnect air supply and power before loading and unloading a workpiece, and before doing maintenance or changing blast tips.

SAFE ENVIRONMENT. To avoid media escaping from the cabinet, never use the blast cabinet if the dust collector is ***OFF*** or its filter is clogged. If you do, media will exit through the cabinet air intake and enter the shop work environment. Always close and latch the blast cabinet door shut before and after operation.

⚠WARNING

Like all machinery there is potential danger when operating this machine. Accidents are frequently caused by lack of familiarity or failure to pay attention. Use this machine with respect and caution to decrease the risk of operator injury. If normal safety precautions are overlooked or ignored, serious personal injury may occur.

⚠CAUTION

No list of safety guidelines can be complete. Every shop environment is different. Always consider safety first, as it applies to your individual working conditions. Use this and other machinery with caution and respect. Failure to do so could result in serious personal injury, damage to equipment, or poor work results.

SECTION 2: POWER SUPPLY

Availability

Before installing the machine, consider the availability and proximity of the required power supply circuit. If an existing circuit does not meet the requirements for this machine, a new circuit must be installed. To minimize the risk of electrocution, fire, or equipment damage, installation work and electrical wiring must be done by an electrician or qualified service personnel in accordance with all applicable codes and standards.



⚠WARNING

Electrocution, fire, shock, or equipment damage may occur if machine is not properly grounded and connected to power supply.

Full-Load Current Rating

The full-load current rating is the amperage a machine draws at 100% of the rated output power. On machines with multiple motors, this is the amperage drawn by the largest motor or sum of all motors and electrical devices that might operate at one time during normal operations.

Full-Load Current Rating at 110V ..... 11 Amps

The full-load current is not the maximum amount of amps that the machine will draw. If the machine is overloaded, it will draw additional amps beyond the full-load rating.

If the machine is overloaded for a sufficient length of time, damage, overheating, or fire may result—especially if connected to an undersized circuit. To reduce the risk of these hazards, avoid overloading the machine during operation and make sure it is connected to a power supply circuit that meets the specified circuit requirements.

Circuit Requirements

This machine is prewired to operate on a power supply circuit that has a verified ground and meets the following requirements:

Nominal Voltage 110V, 115V, 120V
Cycle ..... 60 Hz
Phase ..... Single-Phase
Minimum Circuit Size ..... 15 Amps

A power supply circuit includes all electrical equipment between the breaker box or fuse panel in the building and the machine. The power supply circuit used for this machine must be sized to safely handle the full-load current drawn from the machine for an extended period of time. (If this machine is connected to a circuit protected by fuses, use a time delay fuse marked D.)

⚠CAUTION

For your own safety and protection of property, consult an electrician if you are unsure about wiring practices or electrical codes in your area.

Note: *Circuit requirements in this manual apply to a dedicated circuit—where only one machine will be running on the circuit at a time. If machine will be connected to a shared circuit where multiple machines may be running at the same time, consult an electrician or qualified service personnel to ensure circuit is properly sized for safe operation.*

Grounding & Plug Requirements

This machine is equipped with a power cord that has an equipment-grounding wire and a grounding plug. Only insert plug into a matching receptacle (outlet) that is properly installed and grounded in accordance with all local codes and ordinances. DO NOT modify the provided plug!

⚠WARNING

Serious injury could occur if you connect machine to power before completing setup process. DO NOT connect to power until instructed later in this manual.

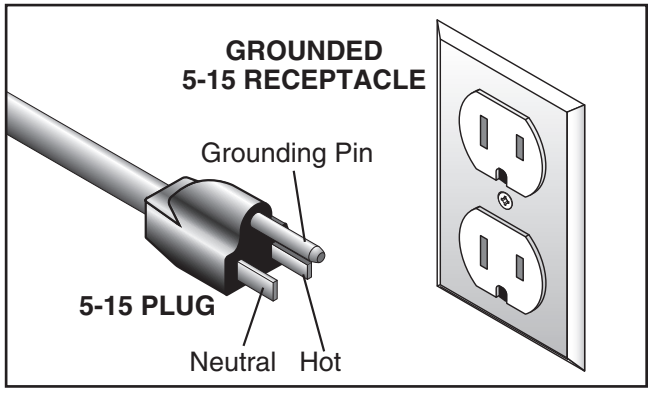

Figure 1. Typical 5-15 plug and receptacle.

⚠CAUTION

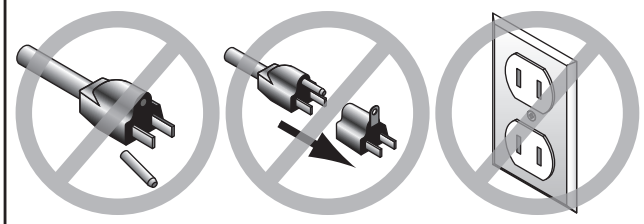

SHOCK HAZARD!

Two-prong outlets do not meet the grounding requirements for this machine. Do not modify or use an adapter on the plug provided—if it will not fit the outlet, have a qualified electrician install the proper outlet with a verified ground.

Improper connection of the equipment-grounding wire can result in a risk of electric shock. The wire with green insulation (with or without yellow stripes) is the equipment-grounding wire. If repair or replacement of the power cord or plug is necessary, do not connect the equipment-grounding wire to a live (current carrying) terminal.

Check with a qualified electrician or service personnel if you do not understand these grounding requirements, or if you are in doubt about whether the tool is properly grounded. If you ever notice that a cord or plug is damaged or worn, disconnect it from power, and immediately replace it with a new one.

Extension Cords

We do not recommend using an extension cord with this machine. If you must use an extension cord, only use it if absolutely necessary and only on a temporary basis.

Extension cords cause voltage drop, which can damage electrical components and shorten motor life. Voltage drop increases as the extension cord size gets longer and the gauge size gets smaller (higher gauge numbers indicate smaller sizes).

Any extension cord used with this machine must be in good condition and contain a ground wire and matching plug/receptacle. Additionally, it must meet the following size requirements:

Minimum Gauge Size.....14 AWG
Maximum Length (Shorter is Better).....50 ft.

SECTION 3: SETUP

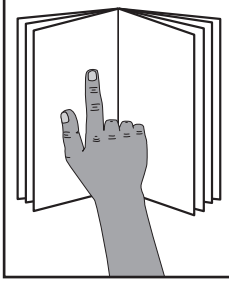

⚠WARNING

This machine presents serious injury hazards to untrained users. Read through this entire manual to become familiar with the controls and operations before starting the machine!



⚠WARNING

Wear safety goggles during the entire setup process!

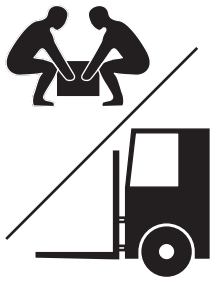

⚠WARNING

HEAVY LIFT!

Straining or crushing injury may occur from improperly lifting machine or some of its parts. To reduce this risk, get help from other people and use a forklift (or other lifting equipment) rated for weight of this machine.

Needed for Setup

The following items are needed, but not included, for the setup/assembly of this machine.

Description	Qty
• Safety Goggles	2
• Leather Gloves	2-Pair
• Wrench 17mm	1
• Ratchet	1
• Socket 10mm	1
• An Assistant	1
• Phillips Screwdriver #2	1
• Fast Drying Silicone Sealant	1

Unpacking

This machine was carefully packaged for safe transport. When unpacking, separate all enclosed items from packaging materials and inspect them for shipping damage. ***If items are damaged, please call us immediately at (570) 546-9663.***

IMPORTANT: Save all packaging materials until you are completely satisfied with the machine and have resolved any issues between Grizzly or the shipping agent. *You MUST have the original packaging to file a freight claim. It is also extremely helpful if you need to return your machine later.*

Inventory

The following is a list of items shipped with your machine. Before beginning setup, lay these items out and inventory them.

If any non-proprietary parts are missing (e.g. a nut or a washer), we will gladly replace them; or for the sake of expediency, replacements can be obtained at your local hardware store.

Inventory (Figures 2–3)	Qty
A. Blast Cabinet Assembly	1
B. Dust Collector	1
C. Left Work Table	1
D. Right Work Table	1
E. Hopper Support	1
F. Hopper	1
G. Legs	4
H. Light Window Adhesive Film 35½" x 10"	5
I. Viewing Window Film 26" x 12"	5
J. Blast Tip Set	1
—Blast Tip 6mm ID	2
—Blast Tip 7mm ID	2
K. Teflon Tape (Pipe Fittings)	1
L. Regulator & Foot Valve w/Hoses	1
M. Leg Supports (43¾")	2
N. Leg Supports (32¼")	2
O. Bolt Bag	1
—Hex Bolts M8-1.25 x 20 (Stand)	32
—Flat Washers 8mm (Stand)	32
—Lock Washers 8mm (Stand)	32
—Hex Nuts M8-1.25 (Stand)	16
—Phillips Head Screws M6-1 x 16 (Hopper)	22
—Flat Washers 6mm (Hopper)	22
—Cabinet Screws M6-1 x 12 (Regulator)	2
—Flange Nuts M6-1 (Regulator)	2
—Cabinet Screws M6-1 x 12 (Dust Collector)	4
—Flange Nuts M6-1 (Dust Collector)	4

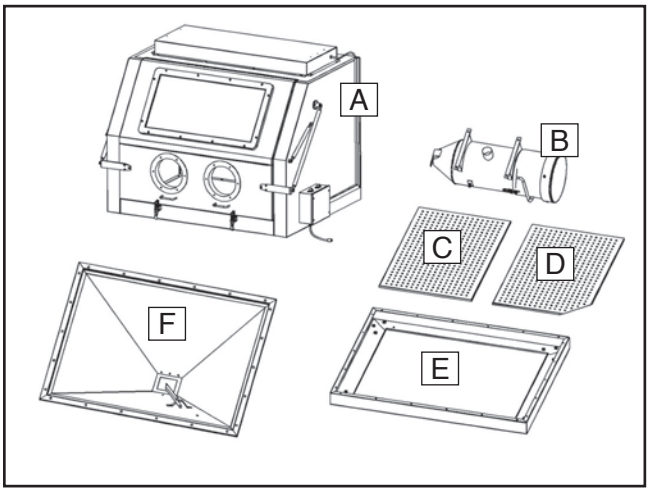

Figure 2. Main inventory.

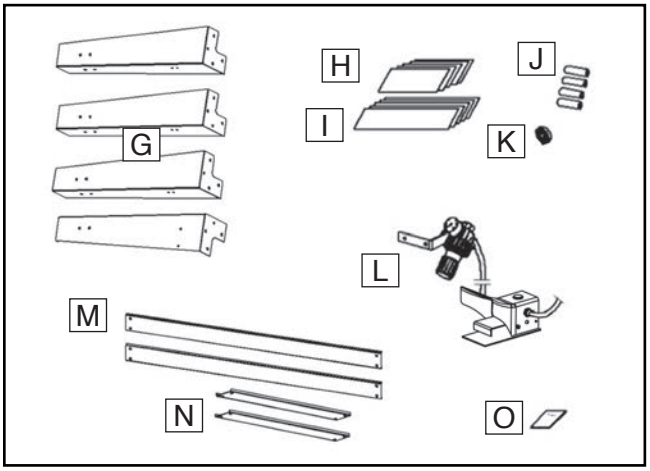

Figure 3. Small items inventory.

NOTICE

If you cannot find an item on this list, carefully check around/inside the machine and packaging materials. Often, these items get lost in packaging materials while unpacking or they are pre-installed at the factory.

Site Considerations

Weight Load

Refer to the **Machine Data Sheet** for the weight of your machine. Make sure that the surface upon which the machine is placed will bear the weight of the machine, additional equipment that may be installed on the machine, and the heaviest workpiece that will be used. Additionally, consider the weight of the operator and any dynamic loading that may occur when operating the machine.

Space Allocation

Consider the largest size of workpiece that will be processed through this machine and provide enough space around the machine for adequate operator material handling or the installation of auxiliary equipment. With permanent installations, leave enough space around the machine to open or remove doors/covers as required by the maintenance and service described in this manual. **See below for required space allocation.**

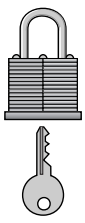

⚠CAUTION

Children or untrained people may be seriously injured by this machine. Only install in an access restricted location.

Physical Environment

The physical environment where the machine is operated is important for safe operation and longevity of machine components. For best results, operate this machine in a dry environment that is free from excessive moisture, hazardous chemicals, airborne abrasives, or extreme conditions. Extreme conditions for this type of machinery are generally those where the ambient temperature range exceeds 41°–104°F; the relative humidity range exceeds 20%–95% (non-condensing); or the environment is subject to vibration, shocks, or bumps.

Electrical Installation

Place this machine near an existing power source. Make sure all power cords are protected from traffic, material handling, moisture, chemicals, or other hazards. Make sure to leave enough space around machine to disconnect power supply or apply a lockout/tagout device, if required.

Lighting

Lighting around the machine must be adequate enough that operations can be performed safely. Shadows, glare, or strobe effects that may distract or impede the operator must be eliminated.

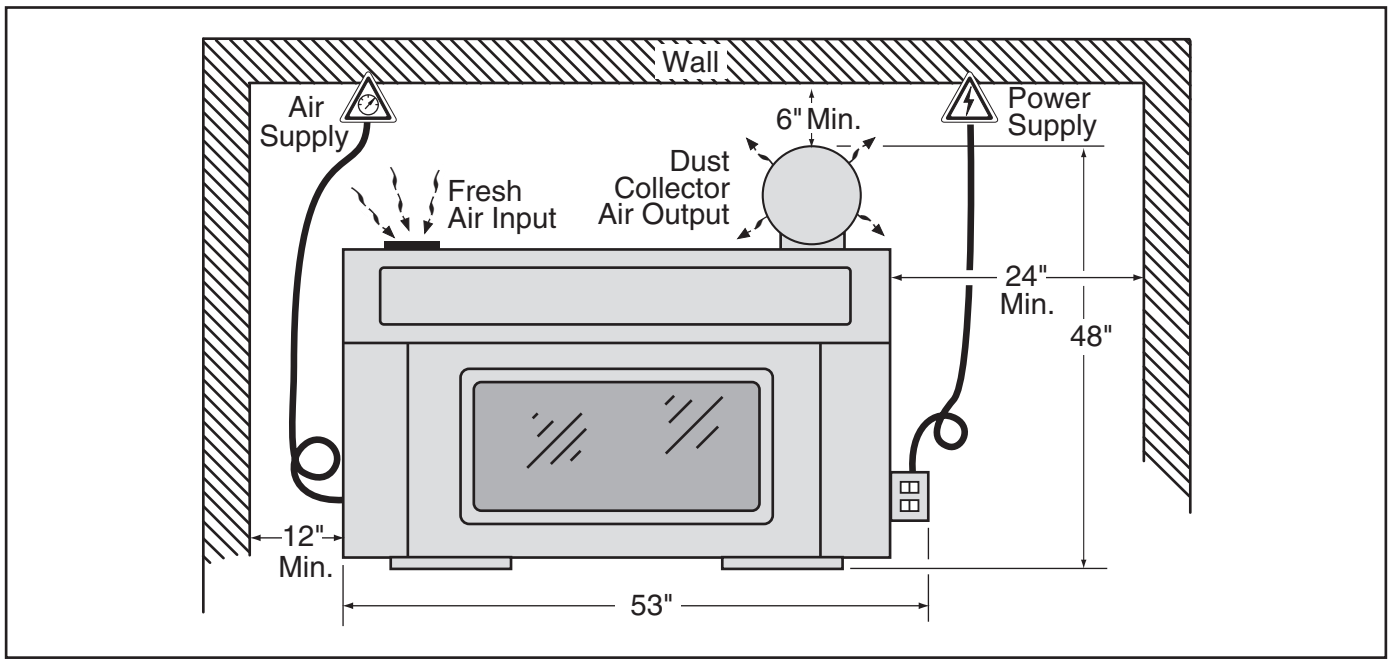

Figure 4. Working clearances.

Mounting

Although not required, we recommend that you mount your new machine to the floor. Because this is an optional step and floor materials may vary, floor mounting hardware is not included. Generally, you can either bolt your machine to the floor or mount it on machine mounts. Both options are described below. Whichever option you choose, we recommend leveling your machine with a precision level placed on the table surface.

Bolting to Concrete Floors

Lag shield anchors with lag screw and anchor studs (see **Figure 5**) are two popular methods for anchoring an object to a concrete floor. We suggest you research the many options and methods for mounting your machine and choose the best that fits your specific application.

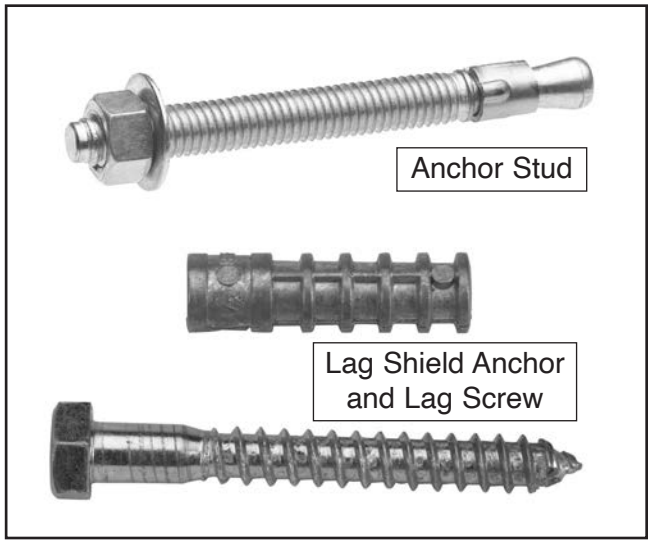

Figure 5. Typical fasteners for mounting to concrete floors.

NOTICE

Anchor studs are stronger and more permanent alternatives to lag shield anchors; however, they will stick out of the floor, which may cause a tripping hazard if you decide to move your machine.

Using Machine Mounts

Using machine mounts, shown in **Figure 6**, gives the advantage of fast leveling and vibration reduction. The large size of the foot pads distributes the weight of the machine to reduce strain on the floor.



Figure 6. Machine mount example.

NOTICE

We strongly recommend securing your machine to the floor if it is hardwired to the power source. Consult with your electrician to ensure compliance with local codes.

Air System Setup

Air Supply

The ability of this blast cabinet to accomplish its task is directly related to how well the air supply system is designed. For this blast cabinet to operate at its maximum potential for large blasting jobs, with the largest blast tip and widest spray pattern, the volume of compressed air feeding the regulator should be 35 CFM at 125 PSI. This requirement demands an industrial grade two-stage compressor that is designed for near continuous duty.

Refer to your compressor Owner's Manual and make sure that the compressor can handle the load of this industrial blast cabinet. Smaller compressors can be used, but the duration of the work shift and tip size installed must be reduced so a safe compressor duty cycle is maintained. Not allowing the compressor to cool will lead to compressor or motor failure. The smaller the compressor, the longer cool-down time that will be required between the work cycles. However, with that said, if a smaller diameter blast tip is used with a sharp type of media, less air pressure and a lower CFM can be sufficient for smaller projects.

If using smaller compressors, make sure to service the compressor more frequently, and verify that your compressor has the best cooling airflow possible.

When filling or servicing the blast cabinet, there is a risk of subjecting the compressor to airborne media or dust. Be sure to locate the blast cabinet away from the compressor operating environment. If even small amounts of media dust enter the compressor through the intake or during general service, the piston rings, valves, and bearings can be quickly destroyed.

If an air compressor is not available or the blast cabinet is to be used at a remote location, NEVER connect this blast cabinet to pressurized bottled gasses such as oxygen bottles used in welding operations. Line ruptures or explosions can occur, causing equipment damage, serious injury, or death.

Air Plumbing

Usually, when installing a new supply line for a blast cabinet where the complete system does not exceed 125 feet, the inside diameter of the air line should be ¾". For runs up to 300', a supply line with a 1" inside diameter is recommended. Be sure to make the supply line long enough to allow the compressed air to cool as much as possible, so the moisture vapors can condensate on the inner walls of the air line instead of accumulating in the blast cabinet or the media.

Install the air supply lines with a slight tilt back towards the compressor tank, so the moisture that accumulates from condensation will drain back into the compressor tank instead of puddling in the low areas of the air lines. Install one or more in-line water separators or an air dryer as close to the blast cabinet as possible where the air has had the most time to cool. Water separators typically work best on cool air rather than on hot air that comes right out of the compressor tank.

For an overview of the typical air system for this blast cabinet and its supply system, refer to the **Pneumatic Diagram** on **Page 16**.

If using an existing air system, eliminate air supply restrictions and pressure drops that may occur at small quick-disconnect fittings, elbows, small supply piping, undersized water separators, kinked lines, or rust-filled piping.

Remove any in-line oilers that are installed directly in the blast cabinet air supply line, or the media and blast cabinet will become contaminated with oil and blasting operations will quickly come to a halt. Air supply lines for other machines that have in-line oilers need not be removed, providing that these lines only feed from the blast cabinet supply line.

Make sure to install an air supply quick-disconnect fitting or a shut-off valve that can be locked out to prevent the air pressure from accidentally being turned on. These items allow for the blast cabinet to be serviced safely or allow it to sit idle when not in use.

Pneumatic Diagram

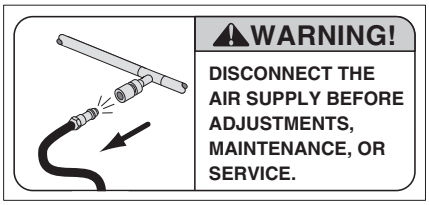

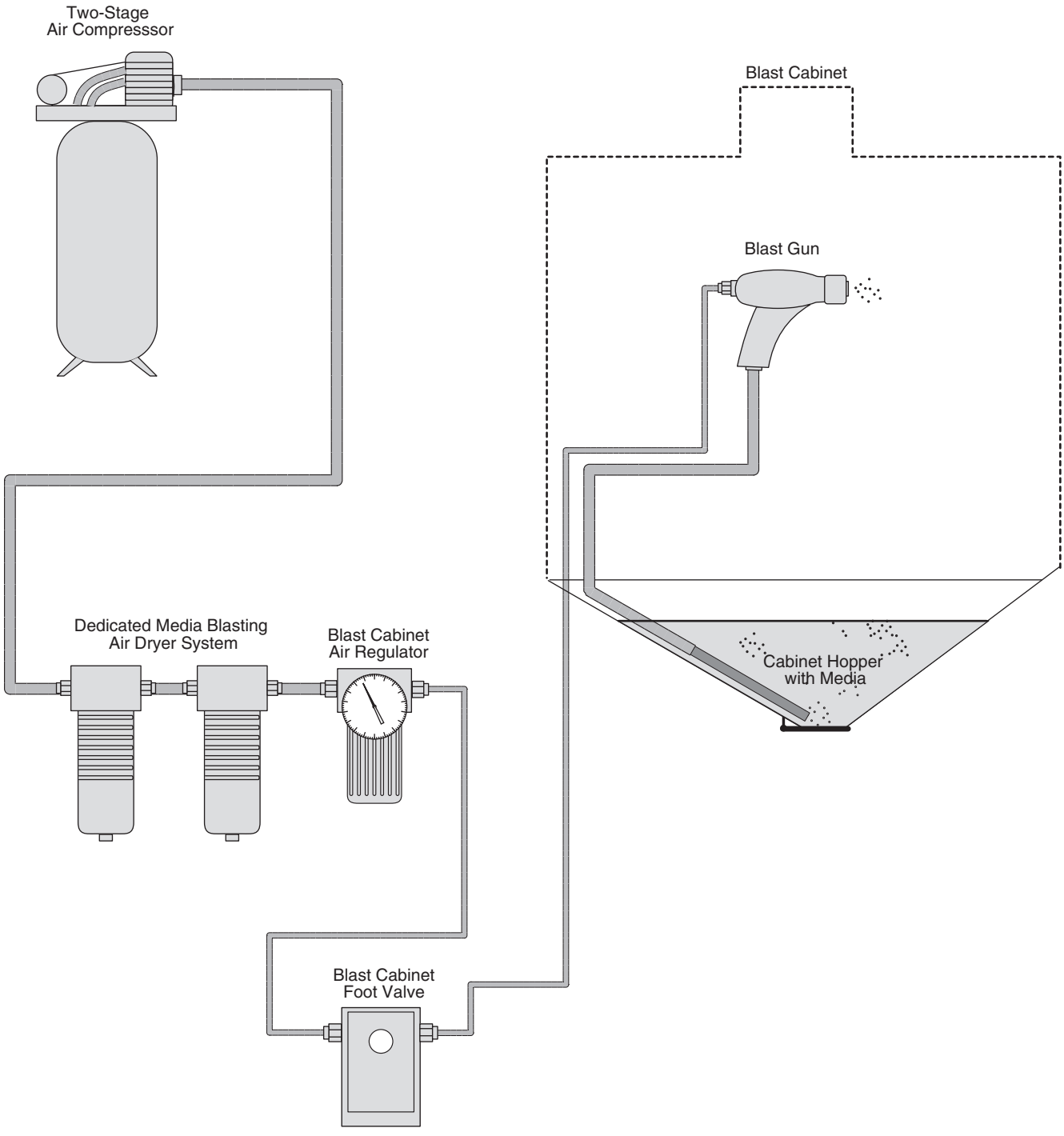

Assembly

The machine must be fully assembled before it can be operated. Before beginning the assembly process, refer to **Needed for Setup** and gather all listed items. To ensure the assembly process goes smoothly, first clean any parts that are covered or coated in heavy-duty rust preventative (if applicable).



⚠WARNING

HEAVY LIFT!

Straining or crushing injury may occur from improperly lifting machine or some of its parts. To reduce this risk, get help from other people and use a forklift (or other lifting equipment) rated for weight of this machine.

To assemble blast cabinet:

1. Disassemble crate and place sheet of cardboard on floor to protect cabinet.

2. Tilt cabinet off of hopper, as shown in **Figure 7**, and place cabinet on its back. Leave hopper in place on pallet.

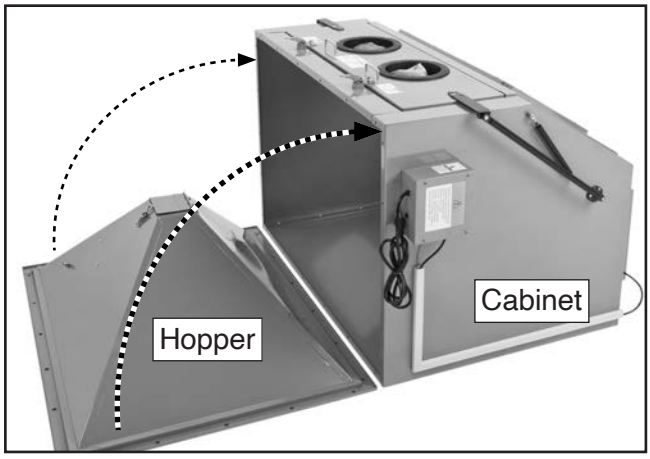

Figure 7. Unpacking cabinet.

3. Invert hopper to expose hopper seal, as shown in **Figure 8**.

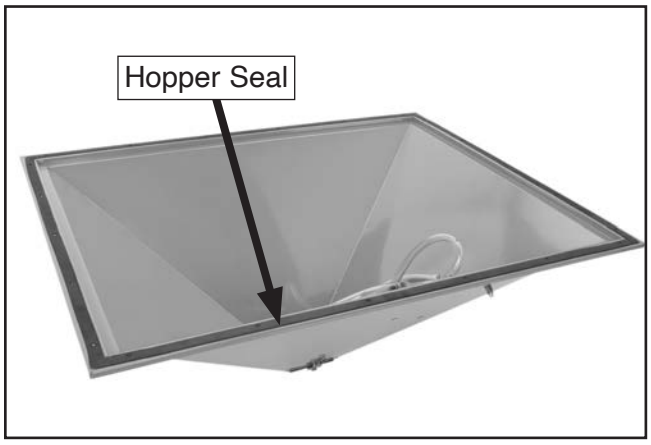

Figure 8. Hopper seal location.

4. Drill or punch out hopper mounting holes in hopper seal.

   Note: *Pre-punching holes in hopper seal will allow fasteners to be started and installed without the tendency to cross thread.*

⚠CAUTION

In next step, remember that door is spring-loaded and handles must be held firmly before door is unlatched and opened. Otherwise, door may suddenly swing open and cause injury or damage.

5. With one hand, grasp cabinet door handle. With other hand, unlatch door and let it open slowly, as shown in **Figure 9**.

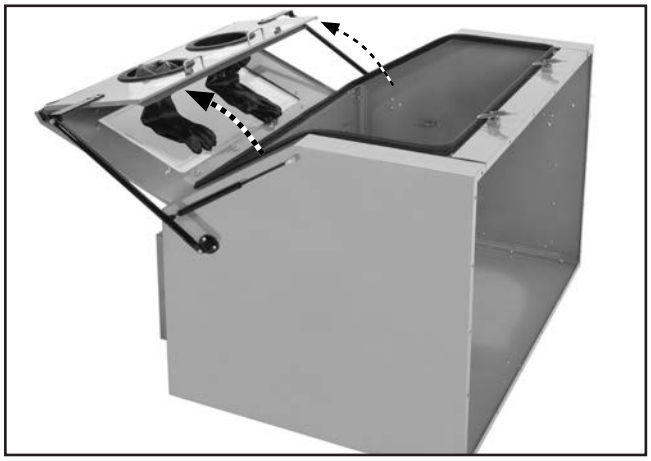

Figure 9. Opening cabinet door.

6. Make sure latch on hopper dump door faces forward, and position hopper next to bottom of cabinet, as shown in **Figure 10**.

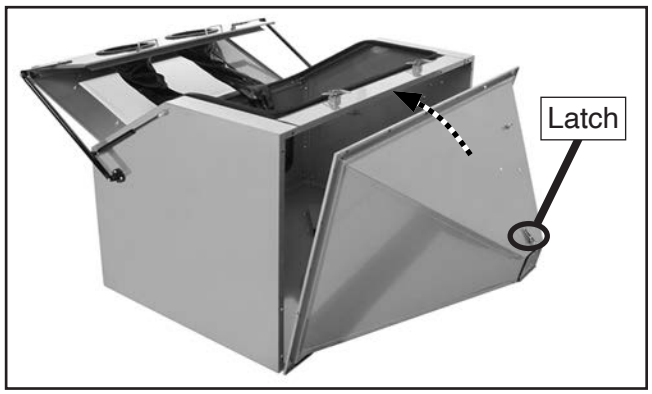

Figure 10. Positioning hopper latch.

7. Fasten (4) stand legs and cross braces to hopper support, as shown in **Figure 11,** using (24) M8-1.25 x 20 hex bolts, (24) 8mm flat washers, (24) 8mm lock washers, and (16) M8-1.25 nuts. When mounting legs, only use (2) holes shown in **Figure 11**.

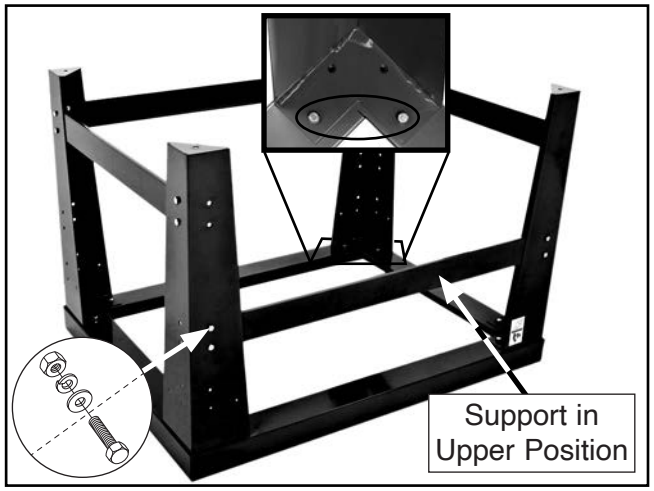

Figure 11. Stand assembly.

⚠CAUTION

To eliminate pinch hazard, in next step, keep fingers clear of hopper support and blast cabinet mating surfaces. When items become aligned, they can slide together without warning, causing a severe pinch injury.

8. Position hopper and hopper support against underside of blast cabinet, as shown in **Figure 12**.

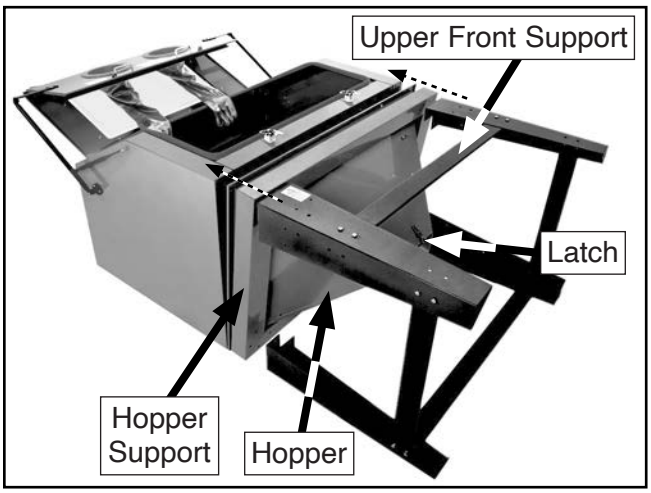

Figure 12. Installing stand and hopper.

NOTICE

In next two steps, to avoid cross-threading screws caused by any foam gasket interference, carefully start screws by hand.

9. Starting at inside-bottom of blast cabinet, install (6) M6-1 x 16 Phillips head screws with 6mm flat washers in order shown in **Figure 13** so all mounting holes line up.

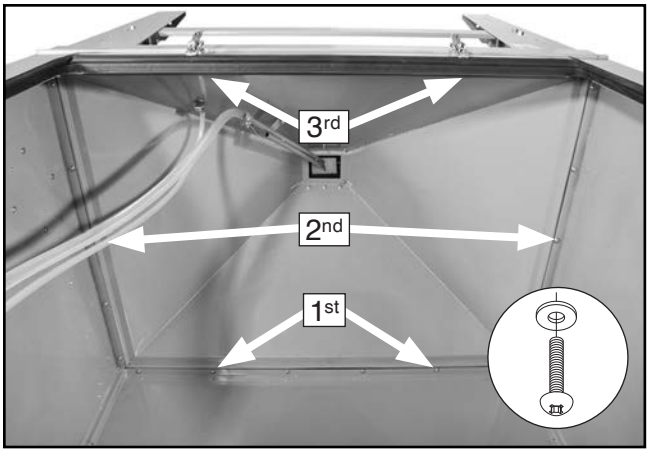

Figure 13. Aligning hopper with cabinet.

10. Install remaining (16) M6-1 x 16 Phillips head screws with their flat washers.

11. Install remaining (8) M8-1.25 x 20 hex bolts, 8mm flat washers, and 8mm lock washers into holes in leg flanges shown in **Figure 14**.

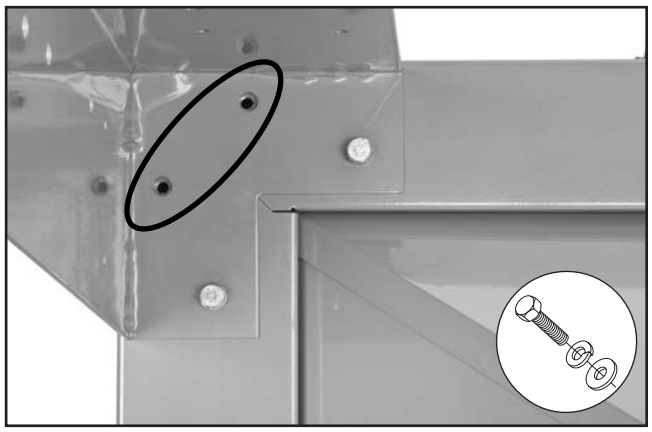

Figure 14. Final leg installation.

12. Close and latch door. With help of assistant, tilt blast cabinet upright onto its legs.

13. Place work tables into cabinet, so work table with corner cut off is positioned at front-right corner of blast cabinet.

14. Route blast gun hoses past notch in right table, and hang blast gun on its hook on right side of cabinet wall, as shown in **Figure 15**.



Figure 15. Blast gun stowage.

15. Fasten pressure gauge and regulator "L" bracket (see **Figure 16**) to left-front leg using (2) M6-1 x 12 cabinet screws and M6-1 flange nuts.

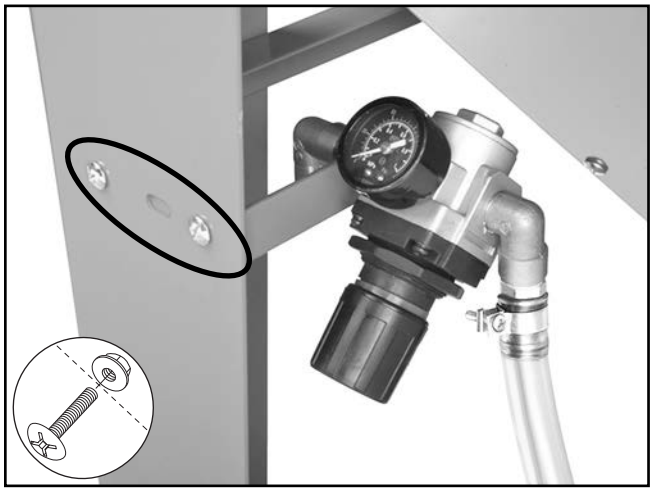

Figure 16. Regulator installation.

16. Connect foot valve output line to fitting located on front-right of hopper shown in **Figure 17**.

17. Position foot pedal (see **Figure 17**) between legs. Fasten it to floor, if desired.

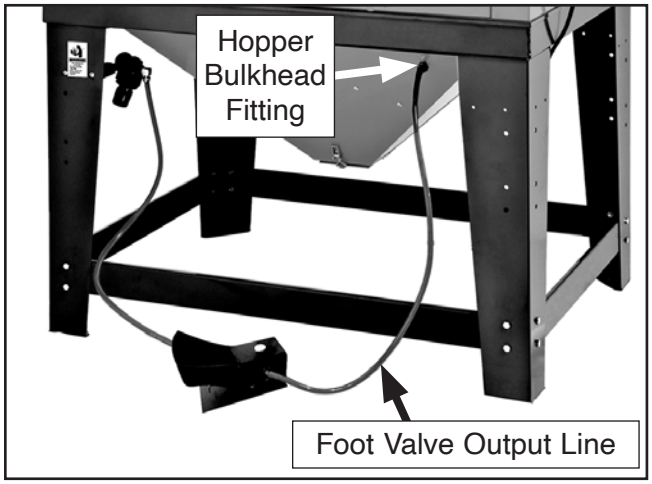

Figure 17. Foot valve installation.

18. Locate dust collector canister assembly and unlatch dust collector motor, lift dust collector out of canister, and set it aside.

19. Working from inside of canister, insert plunger through canister wall so it can be seen protruding from outside of canister (see **Figure 18**).

20. Place spring on plunger, thread hex nut and knob onto plunger, and tighten hex nut against knob, as shown in **Figure 18**.

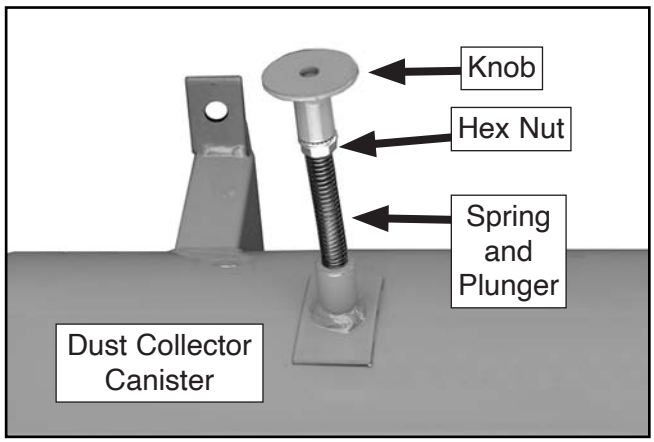

Figure 18. Canister plunger installation.

21. Using (4) M6-1 x 12 cabinet screws and M6-1 flange nuts, fasten dust collector to rear of cabinet so suction port protrudes through hole cut into back of cabinet (see **Figure 19**).

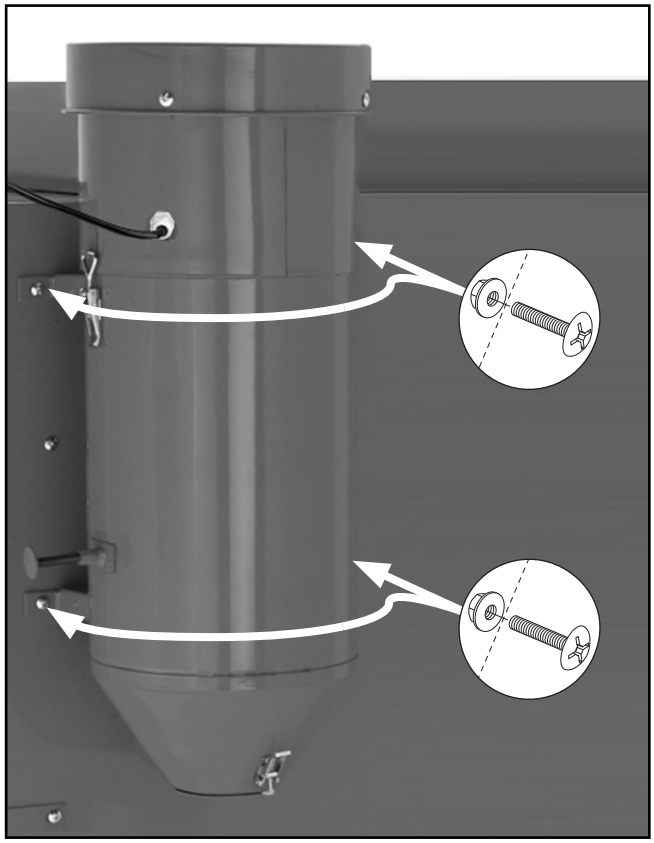

Figure 19. Dust collector installation.

22. Remove inside-right baffle shown in **Figure 20** from cabinet wall.

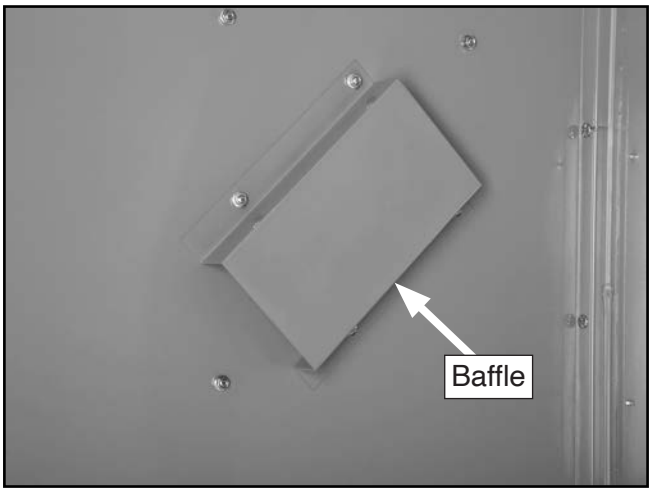

Figure 20. Inside-right baffle.

Note: *Removing this baffle provides access to full circumference of dust collector suction pipe so sealant can be evenly applied without leaks. When dust collector is in operation, and gap shown in* ***Figure 21*** *is sealed, good left-to-right cross cabinet airflow can be achieved for optimum visibility, especially when CFM drops off.*

23. Using silicone (not supplied), seal gap shown in **Figure 21** between suction port and hole in cabinet wall.

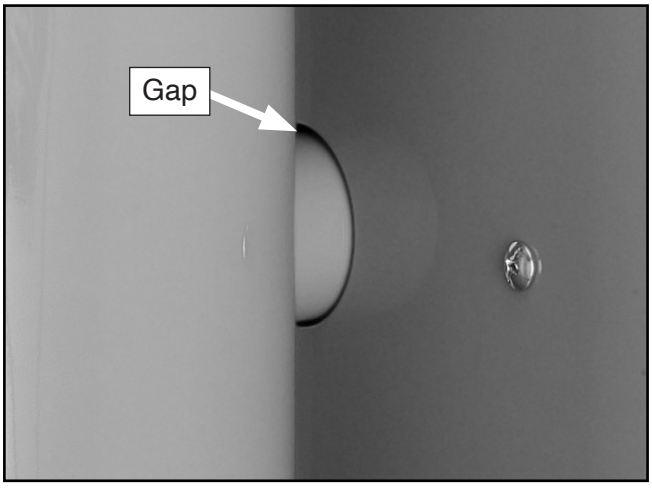

Figure 21. Dust collector gap to be sealed.

24. Re-install baffle in blast cabinet and dust collector in canister.

25. Install dust collector power cord in plastic raceway and snap cover in place, as shown in **Figure 22.**

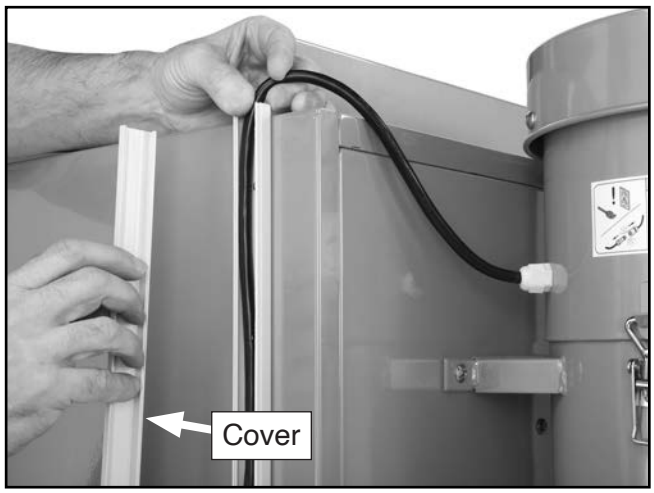

Figure 22. Dust collector power cord installation.

26. Plug dust collector into power supply receptacle on rear of control box shown in **Figure 23**.



Figure 23. Dust collector connected to power supply.

27. Pour desired amount of media into cabinet through front door. DO NOT overfill.

28. Allow silicone sealant to fully cure. Otherwise, when machine is turned ***ON*** and media blasting begins, seal may be broken, causing leakage.

29. Inspect all seals, hose clamps, glove clamps, and window seals for loose fittings, cracks or leaks. Correct as required.

30. Verify that plastic dust sheet is affixed to inside of cabinet viewing window and light window. If blasting operations begin without these dust sheets installed, media will permanently etch window glass and require replacement.

Test Run

Once assembly is complete, test run the machine to ensure it is properly connected to power and safety components are functioning correctly.

If you find an unusual problem during the test run, immediately stop the machine, disconnect it from power, and fix the problem BEFORE operating the machine again. The **Troubleshooting** table in the **SERVICE** section of this manual can help.

The Test Run consists of verifying the following: 1) The lights and the dust collector motor power up and run correctly, 2) the ON/OFF switches work, and 3) the air regulator and system are functional.

⚠WARNING

Serious injury or death can result from using this machine BEFORE understanding its controls and related safety information. DO NOT operate, or allow others to operate, machine until the information is understood.

⚠WARNING

DO NOT start machine until all preceding setup instructions have been performed. Operating an improperly set up machine may result in malfunction or unexpected results that can lead to serious injury, death, or machine/property damage.

To test run machine:

1. Clear all setup tools away from machine.

2. Make sure that DUST COLLECTOR ON/OFF rocker switch is in OFF position, as shown in **Figure 24**.

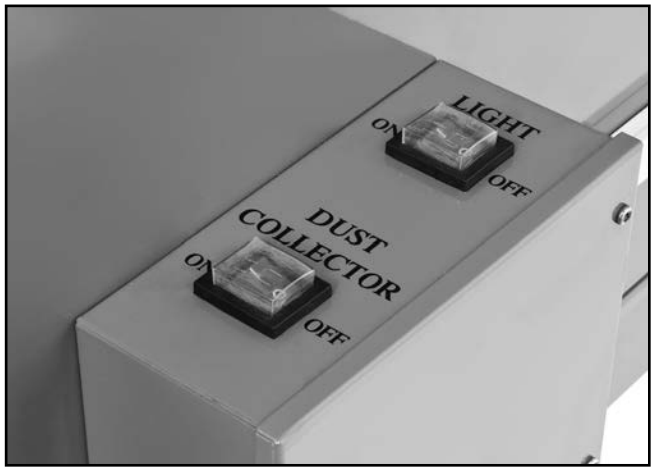

Figure 24. DUST COLLECTOR ON/OFF rocker switch.

3. Connect machine to power source.

4. Verify that dust collector and lights operate correctly by toggling LIGHT and DUST COLLECTOR switches to ON position.

   — When operating correctly, dust collector runs smoothly with little or no vibration or rubbing noises, and all LED lights are brightly illuminated.

   — Investigate and correct strange or unusual noises or vibrations before operating machine further. Always disconnect machine from power when investigating or correcting potential problems.

5. Toggle DUST COLLECTOR switch to OFF position.

6. Put on safety glasses and connect blast cabinet to air supply.

7. Adjust regulator knob to 125 PSI, as shown on gauge.

NOTICE

Whenever closing blast cabinet door, make sure that gloves are out of the way of door seal before door is latched shut. Otherwise gloves and door seal will be pinched and can be damaged.

8. Lower door and latch it shut.

9. Grasp blast gun and press foot pedal. Air should exit from tip of blast gun.

   Note: *If, after this test, regulator gauge needle drops more than a few PSI when you press foot pedal, verify that air supply is not restricted. With proper air supply volume and pressure, blast gun media suction tube should draw 15–17 inches of mercury on manometer.*

10. Listen and watch for air leaks. Spray solution of warm water and dish soap on air lines, valves, and fittings. When leak is found, soap bubbles will form. Correct and reseal as required.

11. Adjust air pressure down to 60 PSI, and disconnect air supply and power supply.

SECTION 4: OPERATIONS

⚠WARNING

Media blasting presents hazard of silicosis and other lung contamination injuries! These injuries are permanent and can get worse over time. If you use media blasting equipment without proper eye protection and respirator, eyes and lungs may become irreversibly contaminated. Only use blast cabinet if you are properly trained in how to use it, correctly protect yourself, and keep all unprotected bystanders away. For latest types of protective equipment and acceptable respirator types, contact local OSHA or NIOSH office.

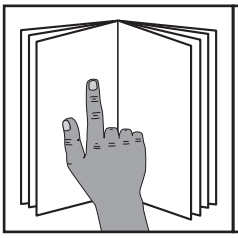

⚠WARNING

To reduce your risk of serious injury, read this entire manual BEFORE using machine.

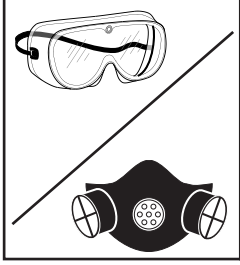

⚠WARNING

To reduce risk of eye injury or lung damage from dust, always wear safety goggles and a respirator when operating machine!

NOTICE

If you are not experienced with this type of machine, WE STRONGLY RECOMMEND that you seek additional training outside of this manual. Read books/magazines or get formal training before beginning any projects. Regardless of the content in this section, Grizzly Industrial will not be held liable for accidents caused by lack of training.

Preparation

⚠WARNING

NEVER sand blast with door open, point gun at yourself or anyone else, or attempt to service any part of machine while it is connected to power or air supply. ALWAYS disconnect blast cabinet from power and air supply when not in use, or during maintenance or adjustments. Ignoring this warning may lead to severe injury.

To prepare for a typical media blasting operation:

1. Conduct daily inspection of cabinet as listed in **Maintenance** on **Page 30**.
2. Select and install required blast tip, load media, and empty dust collector canister.
3. Empty air supply water separators, connect power and air to cabinet, and adjust regulator to required air pressure.
4. Remove water, oil, grease, and loose paint or scale from workpiece, then place workpiece into blast cabinet.
5. Put on safety goggles and respirator, and begin media blasting operation.

Basic Operation

During blasting operations, make sure to keep the water separators drained. Keep in mind that, depending on the temperature and the amount of humidity in the ambient air, water separators may have to be drained once a day or multiple times during your blasting project.

For tips on basic blast cabinet use and how to prevent common problems with blasting operations, refer to **Operation Tips** on **Page 25**.

To use blast cabinet:

1. Prepare cabinet and workpiece for blasting, as discussed in **Preparation** on **Page 23**.

2. Put on safety goggles and respirator.

3. Select and load blasting media through front cabinet door. Refer to **Page 26** for media types if needed.

⚠WARNING

Avoid using media that contains free silica, as this is a leading source of silicosis that can lead to serious injury or death!

4. Install correct tip into blast gun, in position shown in **Figure 25**. Typically, 6mm tip is used, but refer to **Blasting Media** section on **Page 26** to understand when to use larger-sized tips.

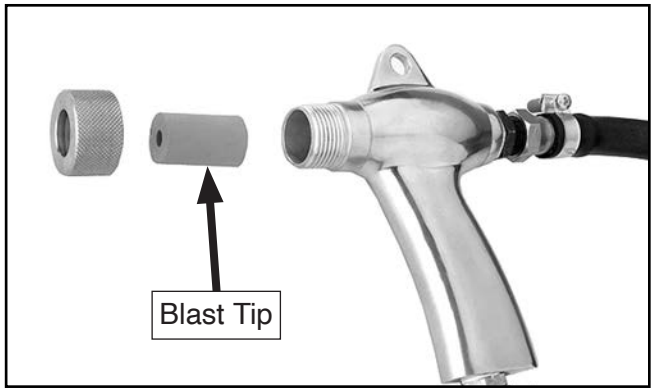

Figure 25. Blast tip installation.

5. Use canister plunger to tap filter clean and make sure canister is empty.

6. Connect media blasting cabinet to power and air supply.

7. Pull down on regulator knob shown in **Figure 26** to unlock it, and turn knob clockwise to increase air pressure for desired blasting operation. Push knob in to lock setting.

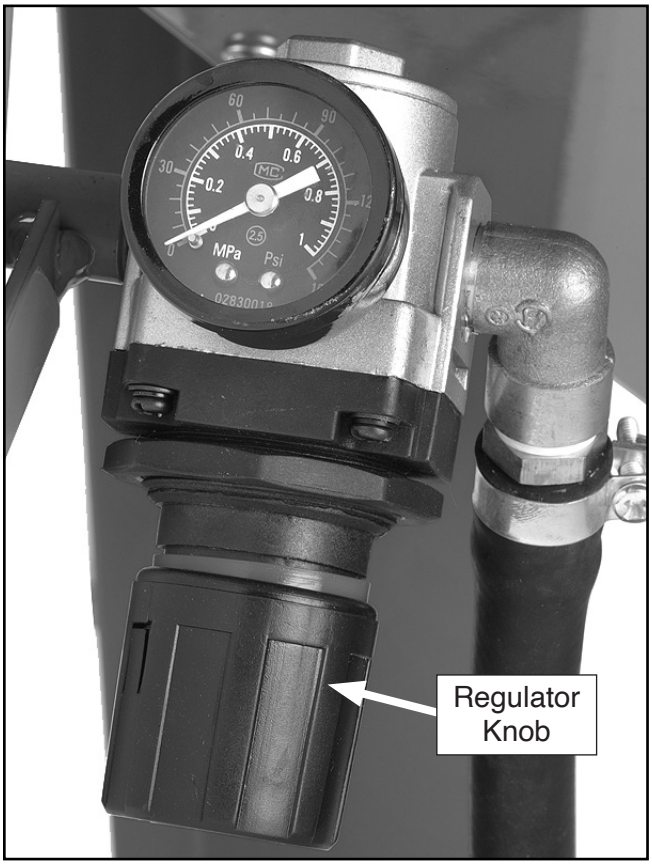

Figure 26. Air pressure regulator.

NOTICE

When loading and unloading heavy or awkward workpiece, you should cover seal with thick cardboard, get lifting assistance, and never rest workpiece on lower door frame. Otherwise you can damage door seal, which will cause cabinet seal to leak.

8. Place workpiece into blast cabinet.

NOTICE

When closing blast cabinet door, move gloves out of the way of door seal before door is latched shut. Otherwise gloves and door seal can be pinched and damaged.

9. Lower door and latch it shut, as shown in **Figure 27**.

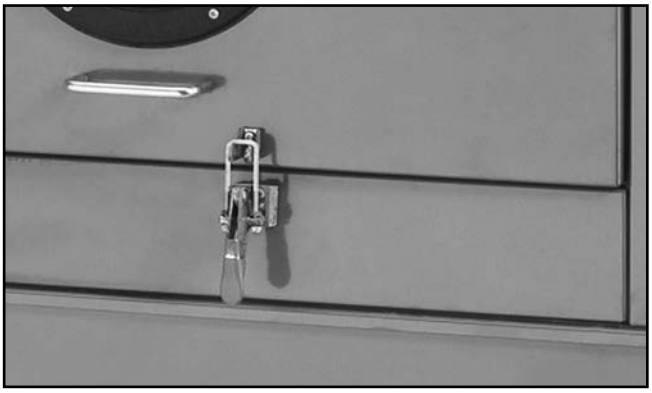

Figure 27. Properly latched door.

10. Toggle LIGHT and DUST COLLECTOR switches to ON position (see **Figure 28**).

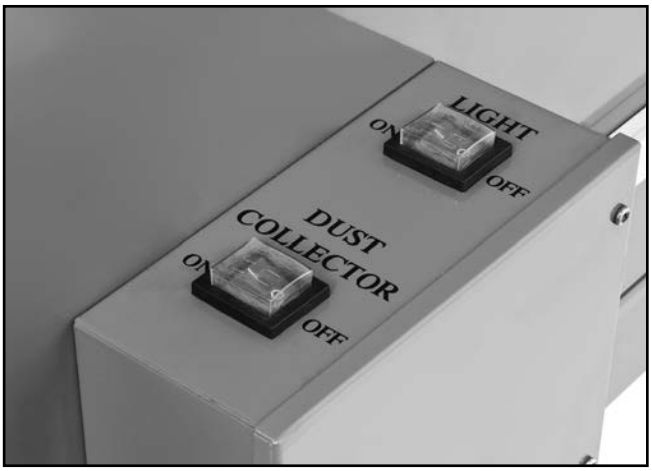

Figure 28. DUST COLLECTOR and LIGHT switches.

11. Point blast gun tip at workpiece in direction where ricochetting spray of abrasive will not hit windows.

12. Slowly press foot pedal and move blast tip in slow, circular motion. Abrasive media will begin spraying from blast gun tip.

13. Every 20–30 minutes during blasting operations, use filter cleaning plunger (see **Page 3**) to knock off material that is caked onto outside of filter. Push plunger in until it stops, then let thumb slide off of button so spring slaps plunger back against inside wall of canister.

14. When blasting operation is complete, disconnect cabinet from power and air supply.

Operation Tips

Improving Productivity

Clean workpieces as much as possible by removing grease, oils, paint, rust, scale and other matter before beginning blasting operations (pressure washers can work well for this). Select the correct media for the task, and do not use air pressure settings that are too high for the media as it will cause media breakdown and dulling.

Maintaining Visibility

Should poor visibility become a problem during blasting operations, do not wipe the windows clean with wet or dry rags. Doing so will scratch the protective plastic sheet, further reducing visibility. Instead, vacuum media away with a soft brush attachment, or use a soft paint brush to brush the dust off of the protective sheets.

Protecting Window Glass

Always make sure to inspect and replace the protective sheets BEFORE the ricochetting media wears through and permanently etches the underlying glass. If using an aggressive media, this is especially true and you may have to double the sheets to protect from wear-through before the blasting project is finished.

Extending Protective Film Life

For most media blasting operations, maintain a distance of six inches. Keep the spray at a 45°–60° degree angle to the workpiece, so the media will ricochet off it and not directly impact the light or viewing window. Doing this will help maintain workpiece visibility and make the protective window film and media last longer. Avoid pointing the gun at the workpiece with the tip perpendicular or 90° from the surface.

Maintaining Workpiece Finish

Blast media will wear the blast gun tip causing an inconsistent abrasive pattern. A poor blast pattern will leave streaks or spots on the workpiece finish. To avoid this situation, rotate the media blasting tip ¼-turn every 10 to 12 hours of use, and replace any tip that has worn larger than 1/16" in diameter from original size.

Media Amounts

Loading only enough media for the job at hand will help you prevent over-using or having to screen excess media. Use just enough media to cover the suction tube opening at the bottom of the hopper by 6" to 8". Experiment with using the least amount of media as possible. The result of using less media is that you will have less material to screen or discard and more fresh media for mixed projects. Store media in a dry place.

Recycling Media

Screen used media with a series of wire mesh screens to refine it to one consistent size.

Air Pressure Settings

Most operations are done with air pressure settings between 60–80 PSI. However, the optimum air pressure is derived from a trial-and-error process based on the factors discussed in the **Blasting Media** section. If required, refer to that section for help.

Air Pressure Exceptions

When blasting thin materials made of aluminum, copper, brass, wood, or other delicate parts, select a fine or soft media and begin blasting at a low pressure, such as 45 PSI. Next, slowly increase the air pressure until you achieve the finish required. When using glass bead media, you may have to keep the operating pressure between 50–80 PSI, or the media will shatter and break down prematurely. However, if using media like silicon carbide and aluminium oxide, you can keep pressures between 100–125 PSI.

Preventing & Clearing Clogs

During blasting operations the gun may periodically clog or become restricted with workpiece debris. If this occurs, cover the blast tip hole tightly, and press the foot valve. Air pressure will be diverted back through the suction circuit in the gun and piping, blowing out the clog. Blasting operations can be resumed afterwards; however, if clogging persists and the cause is other than workpiece debris, refer to **Troubleshooting** on **Page 31** for further solutions.

Blasting Media

Some of the common blasting media types are listed in this section with the MOH scale hardness value listed in parenthesis. All media have benefits and drawbacks, such as the quality of surface finish, media life, toxicity, and the precautions that must be taken to prevent environmental damage or personal injury to your respiratory system. However, all media presents a health risk. Never use media that contains free silica as this is linked to silicosis.

Media Cost vs. Productivity

It is a common assumption that using low-cost media such as basic builder's sand or play sand, is an economical option for blasting. However, since sand is a "dull media," the velocity at which the media must strike the workpiece must be much higher than what is required for "sharp media."

Another requirement when using sand is that the hole in the blast tip must be larger in diameter to avoid clogging caused by the inconsistent grit size, and to prevent caking of other minerals and organic matter mixed in with the sand.

Given the conditions above, the compressor must deliver a high CFM of airflow maintained at a high air pressure, which can generate increased wear and can overheat smaller compressors. Compressors that operate for extended periods at maximum output have higher maintenance costs and a shorter life, not to mention the increased hazard of silicosis for the user and bystanders.

With correct research, excellent productivity can be achieved using sharp media with a smaller tip and less air pressure than with dull media at a higher pressure. Below is a list of Grizzly media that works well in our blast cabinets.

Grizzly Blast Media Part Numbers

G6535: 15 lbs. Aluminum Oxide 220 Grit.
G6536: 15 lbs. Aluminum Oxide 120 Grit.
G6537: 15 lbs. Aluminum Oxide 60 Grit.
G6538: 15 lbs. Glass Bead 50-Micron Grit.

Aluminum Oxide (8.5–9)

Aluminum oxide is commonly used for surface finishing. It has an angular shape, is extremely sharp, has extended blast times, and is highly recyclable.

Silicon Carbide (9–9.5)

This blast media is considered to be the hardest available. The crystal structure is sharp and cutting is fast and aggressive. This media is often used to engrave and etch glass and stone. It has shorter blasting periods. Silicon carbide has no free silica and it can be recycled many times.

Sand Media (6–7)

This media is easy to find and gives an average finish for many projects. Sand has a good recycling life and is economical. However, as discussed in **Media Cost vs. Productivity**, the weak cutting ability and high CFM requirements can lead to additional compressor maintenance. Also, if using sand that contains free silica, there is an increased health hazard for silicosis.

Steel Media (8.9–6)

This aggressive media creates a rough finish that accepts paint well. It is durable and has a long life; however, it MUST be kept very dry to prevent rusting. The main types are as follows:

- **Steel Grit (8–9)**: Compared to aluminum oxide, steel grit is softer and has a low habit of fracture, which leaves an excellent etched surface on rubber, paints, and other coatings. Steel grit comes in many grit sizes and hardness, and is a popular choice for aircraft applications.

- **Steel Shot (6–7.5)**: Steel shot is widely used for stripping, cleaning, and general improvements of metal surfaces. It has a rounded-ball shape and comes in many grades, sizes, and hardness, and usually gives the surface a shiny or polished look. Steel shot peening is also used to de-stress machinery parts such as impeller fins, bearing parts, springs, and torsional components. Steel shot does not create high amounts of dust and it has a superior recycle rate.

Slag Media (7–8, 6–7)

Slag media are by-products of various types of smelting and coal burning processes. Be aware that some slag media may contain unwanted by-products from these processes.

- **Copper Slag (7–8):** Copper slag is a by-product from the copper manufacturing process. It is very economical but non-reusable. It is considered a better alternative to sand and does not present a hazard for silicosis. Best suited for cleaning rust, mill scale, and paint from steel. Copper slag leaves a good surface to anchor and bond coatings and paints. The structure is blocky and sharp-edged.

- **Coal Slag (6–7):** This blast media is made from liquid coal slag that is collected from utility boilers. It then is hardened and crushed. The resulting media is sharp, angular, and fast-cutting with little dust. However, copper slag can release hazardous pollutants into the environment. Various grit sizes can be used from light blasting operations to heavy-duty rust, paint, and mill scale removal. The resulting finish is a good surface ready to anchor and bond coatings and paints.

Glass & Garnet Media (7.5–5.5)

Glass media contains no free silica or heavy metals and is non-toxic and inert. It works well for soft metals and is a common choice when critical tolerances of machine parts must not be affected.

- **Glass Beads (5.5):** Just as the name indicates, this media is round in shape. Glass beads come in various grit sizes and hardness. It is manufactured from lead-free, soda lime-type glass. Unlike angular abrasives that cut, beads burnish and leave a bright finish that typically has no dimensional change. Glass beads can be recycled many times. Common applications are honing wood, blending surfaces, polishing, peening, finishing surfaces, removing scratches, and basic cleaning of most materials.

—**Crushed Glass (5.5)**: This media is created from recycled bottles and other glass. It has a sharp cutting behavior and is often used to remove epoxy coatings, glues, polyurethanes, vinyls, elastomers, rubbers and tar. Crushed glass embeds less particles while blasting, which results in a very light and clean-looking finish.

—**Garnet (6.5–7.5):** Garnet is very effective at cleaning steel, works well on brick, stone, and stainless steel. It is very dense and hard, and is naturally occurring. The recyclability is good, and it is a common choice for use in blast cabinets, the oil and gas industry, and shipyards.

Plastic Bead Media (3–4)

Plastic abrasives are available in a variety of types such as urea, melamine, and acrylic compositions. The beads are round and give reliable, consistent stripping results. Excellent for paints, varnishes, rusts, and oxidation from soft metals, plastics, and wood. The aerospace and automotive industry are chief consumers of this blast media.

—**Urea (3–4):** Urea is the most commonly used plastic media. It is considered to be an environmentally-friendly choice because it is a much safer option than using chemical strippers. It is recyclable and is an excellent choice for stripping tough coatings when speed is a high priority and the surface is not critical.

—**Melamine (3–4):** A long-lasting, recyclable media, this abrasive is the most aggressive of the plastic beads. Due to its hardness, it can strip hard-to-remove coatings and be substituted for some of the other types of glass beads.

—**Acrylic (3–4):** This multipurpose blast media is one of the longest lasting types available, and is available in a wide range of grit sizes. It is often used for stripping sensitive surfaces or delicate parts that may consist of multiple types of compounds.

Soft Media (4.5–2.4)

There are many types of "Soft" blast media, many of which are inert minerals and organic material. Some blast cabinets with dust collection systems require special filters or dust collectors for soft types of media where, the media becomes pulverized and turns to a cloudy dust that can cake onto filters quickly. When used with the Model G0714, the filter cleaning interval will have to be increased to maintain flow.

—**Ground Walnut: (4.5–5)** This is a soft media produced from crushed or ground walnut shells. The structure is multi-faceted and angular with no free silica. Durability is excellent, making this media a good choice for blasting operations where the paint, varnish, or coating must be cleaned but not marred or removed. Great for cleaning hardwoods, jewelry, and electrical items. Using a larger grit under higher pressure settings, ground walnut shells can also be used to strip away paint and varnishes. Also works great for cleaning coke and other carbon deposits from engine parts.

—**Pumice (6–7):** This mineral is a natural volcanic ash that is inert and can be used for the most sensitive blasting operations where the painted or finished surface must be entirely unaffected by the removal of the foreign matter. The structure is honeycombed and block-shaped.

—**Ground Corn Cob (4.5):** An organic, soft-blasting grit that has an angular shape, and has excellent surface cleaning behavior similar to ground walnut and peanut shells. It is available in a selection of grit sizes, and is commonly used to strip light coatings , thin bark, and dirt off of wood without surface damage or grain blowout.

—**Sodium Bicarbonate (2.4):** Baking soda is inert, water-soluble, and has an excellent ability to remove and absorb dirt or contaminants from a surface. It will not peen or cut the underlying workpiece. This important media can be used where small ports and bores must be cleaned without clogging the passages. After blasting operations, any remaining media can be removed with water.

SECTION 5: ACCESSORIES

⚠WARNING

Installing unapproved accessories may cause machine to malfunction, resulting in serious personal injury or machine damage. To reduce this risk, only install accessories recommended for this machine by Grizzly.

NOTICE

Refer to our website or latest catalog for additional recommended accessories.

G0957—80-Gallon 5 HP Extreme-Series Air Compressor

This compressor operates with a maximum pressure of 175 PSI and delivers 18.5 CFM at 90 PSI and 24 CFM at 40 PSI. The fan pulley and cooling fin design provide efficient cooling to keep the unit from overheating. Includes a tank pressure gauge, ½" NPT threaded fitting, and an oil sight glass.



Figure 29. G0957 80-Gallon 5 HP Extreme-Series Air Compressor.

G0572—Hanging Air Filter w/Remote

This filter has a convenient remote control and features a three-speed motor, automatic shutoff timer, and 1-micron inner filter and 5-micron outer filter. Air flow is 556, 702 and 1044 CFM. Overall size is 26"L x 19½"W x 15"H.



Figure 30. G0572 Hanging Air Filter w/Remote.

H2499—Small Half-Mask Respirator
H3631—Medium Half-Mask Respirator
H3632—Large Half-Mask Respirator
H3633—Cartridge Filter

If you work around dust everyday, a half-mask respirator can be a lifesaver. Also compatible with safety glasses!



Figure 31. Half-mask respirator with disposable cartridge filters.

SECTION 6: MAINTENANCE

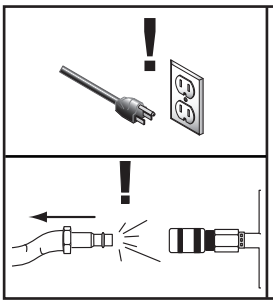

⚠WARNING

Always disconnect power and air supply to machine before performing maintenance. Failure to do this may result in serious personal injury.

Schedule

For optimum performance from this machine, this maintenance schedule must be strictly followed.

Ongoing

To minimize your risk of injury and maintain proper machine operation, shut down the machine immediately if you ever observe any of the items below, and fix the problem before continuing operations:

- Loose mounting bolts.
- Leaks, cracks, abrasions, and wear in fittings, hoses, and cabinet seals.
- Incorrect air pressure for media.
- Dirty filter.
- Worn window protective films.
- Worn or damaged wires/cords.
- Any other unsafe condition.

Daily Maintenance

- Drain water separators.
- Empty dust collector canister.
- Clean filter.
- Rotate blast tip to compensate for wear.

Monthly Maintenance

- Use soapy water on fittings/hoses. Bubbles indicate leak.
- Clean/vacuum dust buildup from inside cabinet/off motor. Inspect for leaks or damage.
- Inspect suction lines carefully for spots that collapse or leak during operation.
- Inspect work gloves for holes or wear.
- Repaint bare metal portions of cabinet (with windows covered).

Cleaning

⚠WARNING

Wear safety goggles and respirator when cleaning cabinet or filter. Failure to comply can cause serious personal injury.

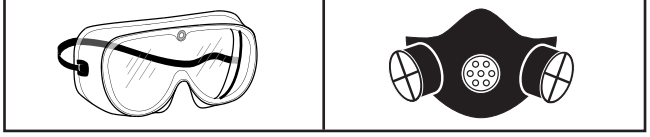

Wipe down the exterior of the cabinet with a light solution of mild dish soap and water, then dry with a clean towel. To avoid scratching windows, never clean them with wet or dry rags. Instead, vacuum media away with a brush attachment, or gently brush the window with a soft paint brush.

Every five hours of use, empty the canister through the dump port shown in **Figure 32**. Typically this media is discarded as it has a high ratio of fine dust contaminants. For major cleaning, unlatch the top of the dust collector and remove the filter element. Inspect all sealing foam and replace as required. Clean the filter canister pleats by carefully blowing them from the inside out with compressed air. If the filter is clogged, or has holes or tears, replace the filter.



Figure 32. Dust collector service.

SECTION 7: SERVICE

Review the troubleshooting and procedures in this section to fix or adjust your machine if a problem develops. If you need replacement parts or you are unsure of your repair skills, then feel free to call our Technical Support at (570) 546-9663.

Troubleshooting

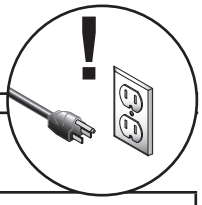

Operation

Symptom	Possible Cause	Possible Solution
Intermittent, clogging, or no media spray at blast gun; or striping is occurring on workpiece.	1. Suction tube has been clogged from contaminant.	1. Cover blast tip and press foot pedal to use air pressure to purge foot valve and suction system. Repeat step periodically during blasting operations.
	2. Incorrect or worn-out media.	2. Verify that media chosen is correct material for blasting operation (**Page 26**). Make sure that media is not worn-out, saturated with debris, or contaminated with moisture, causing it to cake inside of lines. Screen or replace media as required.
	3. Worn or incorrect blast tip.	3. Disconnect machine from air and rotate blast tip ¼-turn to compensate for wear. Replace or install with correct blast tip.
	4. Low airflow or pressure up to cabinet.	4. Troubleshoot air supply system and verify compressor, supply lines, moisture separators, and air dryers have correct airflow and are in good working order.
	5. Blasting system has incorrect airflow or pressure.	5. Adjust air regulator on cabinet to maintain correct air pressure and flow, and verify no hose kinks or clogs exist.
	6. Cabinet is overloaded with media.	6. Remove media but leave just enough for blasting operation.
	7. Blast gun is damaged or has bad seals.	7. Disassemble blast gun, clean and reseal.
	8. Foot valve or lines are at fault.	8. Clean and reseal foot valve, fittings, and lines.
Dust collector won't start or circuit breaker trips.	1. Damaged or loose power cord.	1. Re-secure and test power cord. Replace as required.
	2. ON/OFF switch at fault.	2. Test and replace open switch.
	3. Circuit breaker/fuse has tripped.	3. Replace fuse on control box, reset power supply circuit breaker.
	4. Wiring at fault.	4. Repair for open or shorted wiring connections.
	5. Motor brushes at fault.	5. Replace motor brushes (**Page 33**).
	6. Motor at fault.	6. Test and replace motor as required.
LED lights are dim or will not illuminate.	1. LED light(s) at fault.	1. Replace LED light(s).
	2. ON/OFF switch at fault.	2. Test and replace open switch.
	3. Wiring at fault.	3. Repair for open or shorted wiring connections.

Symptom	Possible Cause	Possible Solution
Poor visibility during blasting operations.	1. Lighting is at fault.	1. Replace one or more LED lights as required to establish correct illumination (**Page 36**). Dim surrounding shop lighting near blast cabinet, or eliminate exterior glare on viewing window with sun shroud.
	2. Protective sheet on windows are worn.	2. Replace protective sheets on viewing window and light window (**Page 36**).
	3. Workpiece is excessively dirty.	3. Prepare workpiece properly. Remove water, oil, grease, and excessive amounts of paint or scale that can be easily removed.
	4. Media selected is too fine or soft for good visibility.	4. Chose another media (**Page 26**) with lower potential for clouding.
	5. No dust collection.	5. Clean dust collector filter (**Page 30**), empty canister, and turn on dust collector. Verify cabinet air intake is unblocked.
	6. Dust collector filter is worn out.	6. Replace filter (**below**).
	7. Dust collector motor is at fault.	7. Replace motor brushes (**Page 33**), or motor if required.

Filter Replacement

⚠WARNING

Wear safety goggles and respirator when cleaning cabinet or filter. Failure to comply can cause serious personal injury.



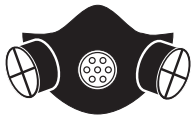

If, after a full filter cleaning, the cabinet still clouds up and general blasting visibility is poor, or if the dust collector has lost a considerable amount of CFM, the filter must be replaced.

To replace filter:

1. DISCONNECT MACHINE FROM POWER!

2. Unlatch dust collector, lift entire motor and filter unit out of canister (see **Figure 33**), then place it on workbench upside down.

3. Spin wing nut off of retaining stud, and remove filter (see **Figure 33**).

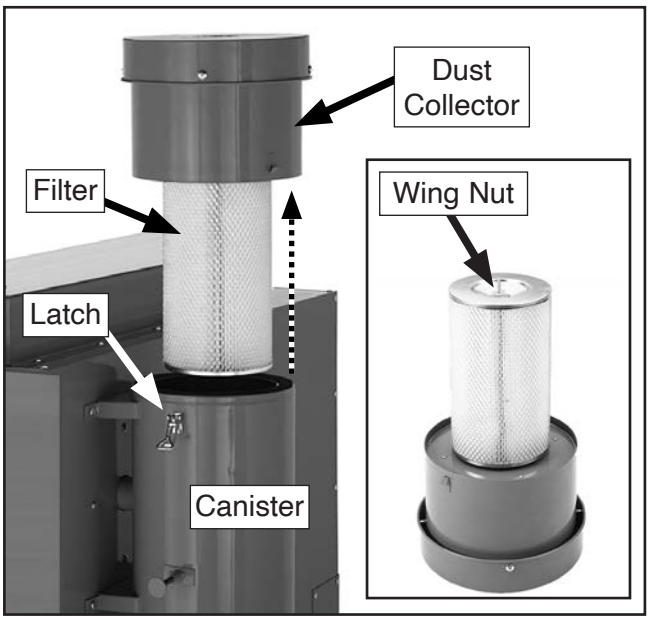

Figure 33. Dust collector and filter.

4. Place new filter over retaining stud, then re-install wing nut and dust collector.

Motor Brush Replacement

During the life of your blasting cabinet, you may find it necessary to replace the dust collector motor brushes. If the motor operates loudly, or the dust collector still has low suction after a new filter has been installed, the motor brushes likely have reached the end of their usable life and need to be replaced.

Items Needed	Qty
Phillips Screwdriver #2	1
Standard Screwdriver #2	1
Acetone and Cotton Rag	1
Crocus Cloth (From Local Auto Parts Store)	1
Carbon Brush Set (P0714101-11)	1

To replace brushes:

1. DISCONNECT MACHINE FROM POWER!

2. Unlatch dust collector, lift entire motor and filter unit out of canister, and place it on a workbench for ease of service (see **Figure 34**).

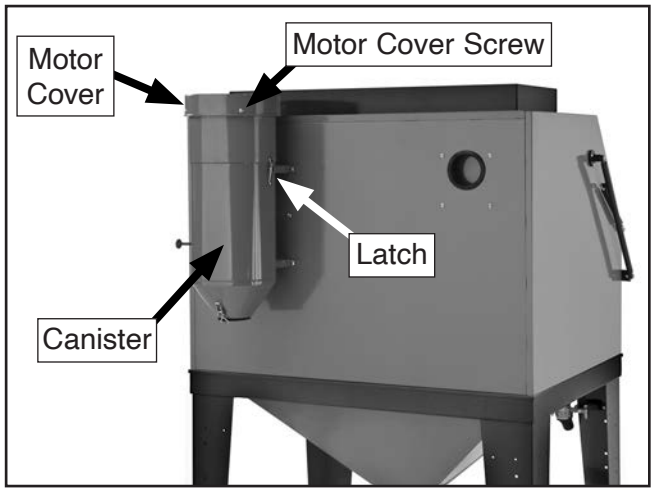

Figure 34. Dust collector components.

3. Remove motor cover shown in **Figure 34**. It is attached with (4) screws.

4. While pulling fan cover upwards, use standard screwdriver to carefully pry out cover lock tangs just enough to clear hooks (see **Figure 35**), then remove cover from motor.

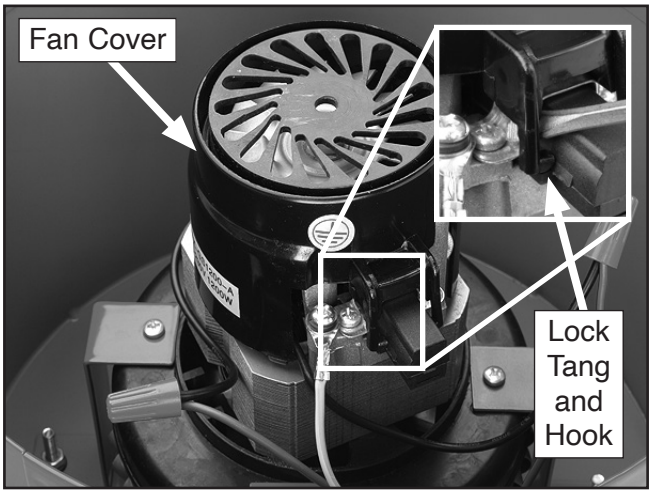

Figure 35. Brush removal.

5. Remove (2) screws that secure each brush housing and remove retainers (see **Figure 36**).

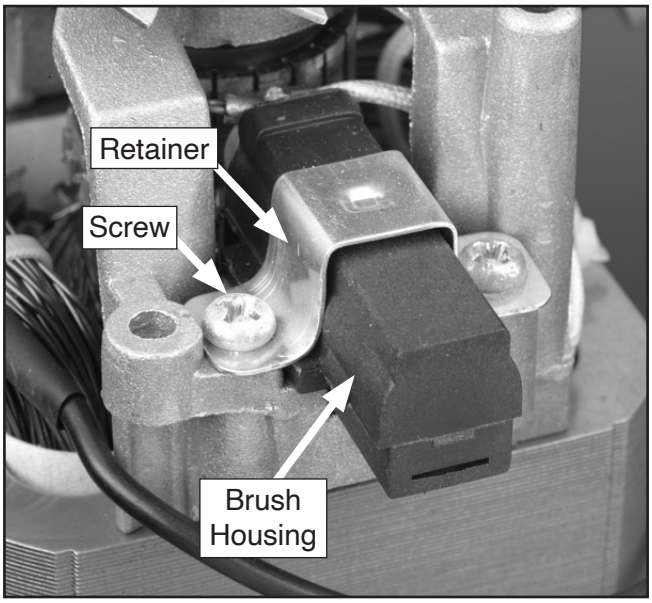

Figure 36. Retainer removal.

6. Lift each brush housing out of its seat and unplug power wire (see **Figure 37**).

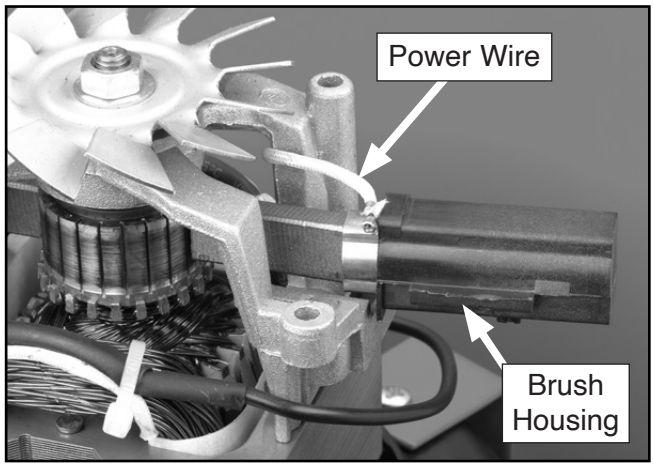

Figure 37. Brush housing removal.

7. Slide brush assembly apart, clean housings and brass sleeves with acetone, and allow parts to dry (see **Figure 38**).

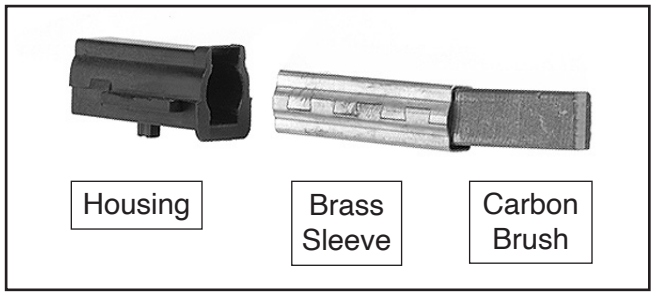

Figure 38. Brush assembly components.

8. Re-assemble housings with brass sleeves and new carbon brushes.

9. Inspect commutator surface for carbon tracking (see **Figure 39**).

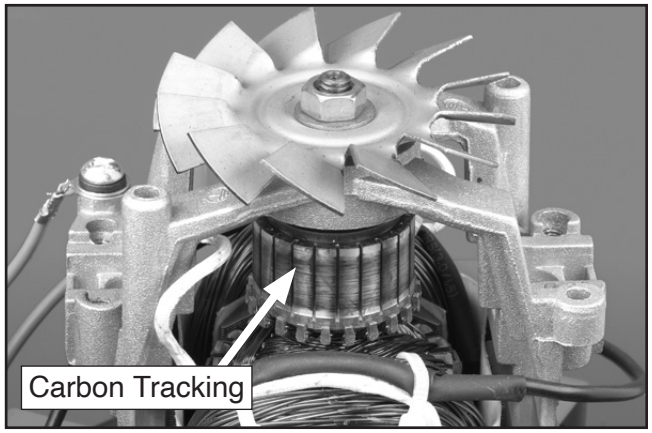

Figure 39. Carbon tracking on commutator surface.

— If brushes have worn deep grooves in commutator, we recommend replacing motor. Typically, labor involved with returning commutator on lathe then undercutting insulator segments far exceeds price of new motor.

— If commutator only has minor wear and black-colored carbon tracking (see **Figure 39**), use fine crocus cloth to polish surface where brushes ride. DO NOT use emery cloth or sandpaper to clean commutator, or you could make it "out-of-round," which will cause new brushes to arc, overheat, and wear out quickly.

10. Finish cleaning process by using acetone and cotton rag to wipe off any oils or contaminants from commutator.

11. Insert power wire spade terminal into brush assembly between brass sleeve and housing (see **Figure 40**).

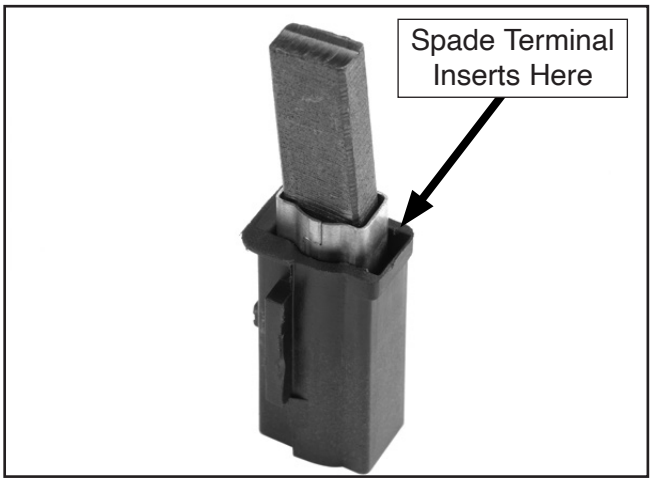

Figure 40. Brush power lead location.

12. Place brush housing into brush seat on motor, and place retainer over brush housing so lock lug drops into lock slot in brush housing (see **Figure 41**).

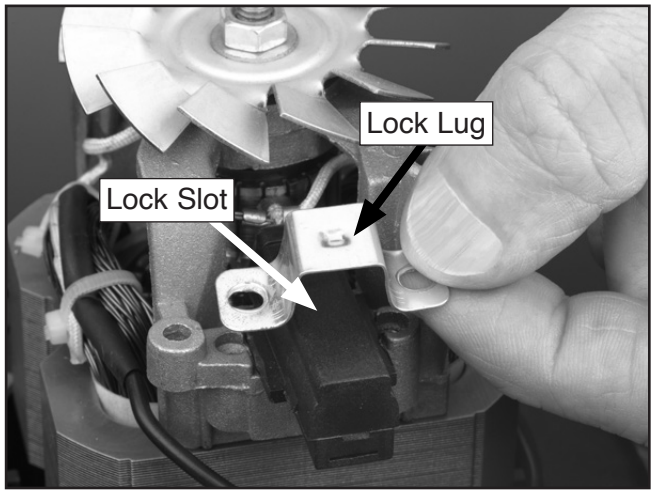

Figure 41. Brush retainer installation.

13. Install and tighten brush housing retaining screws.

14. When brush housings are installed, make sure to route brush power wires well away from commutator, as shown in **Figure 42**, or commutator will wear into wire, causing electrical short.

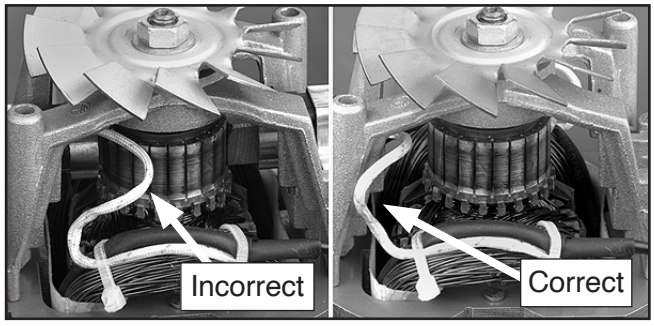

Figure 42. Safe power wire routing.

15. Place fan cover back onto motor so tangs lock onto brush housings, as shown in **Figure 43**.

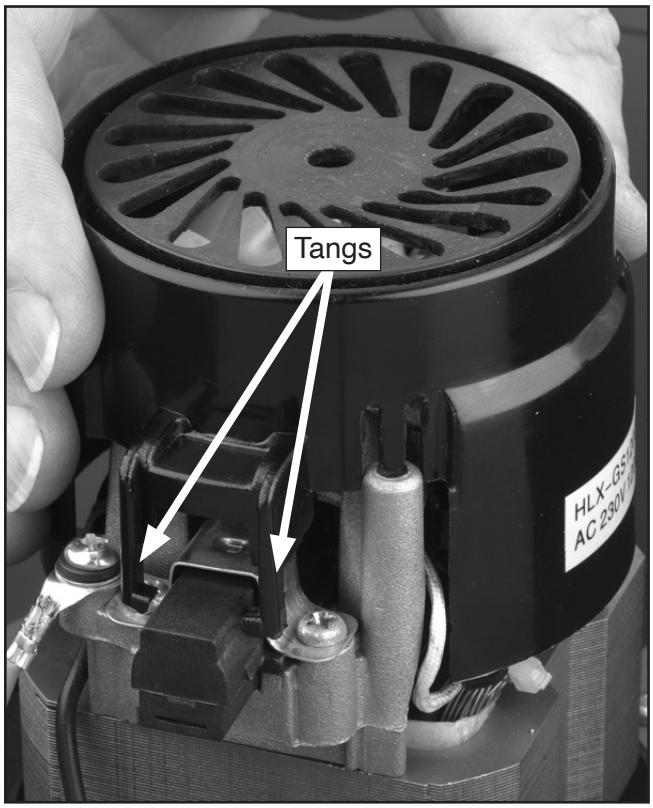

Figure 43. Fan cover installation.

16. Install motor cover and insert dust collector assembly into canister, then latch dust collector in place.

17. Test dust collector operation as outlined in **Test Run** on **Page 21**.

LED Replacement

The three LED lights are accessed through the outside top of the cabinet (not from the inside of the cabinet).

Items Needed	Qty
LED Light Assembly (Part # P0714011V2-1)	1
Phillips Head Screwdriver #2	1
Small Step Ladder	1
Safety Goggles	1
Leather Gloves	1
Soft Cotton Rags	3
Mineral Spirits	1 Pt
Solution of Warm Water and Dish Soap	1 Qt
Assistant	1

To replace LED lights:

1. DISCONNECT MACHINE FROM POWER!

2. Remove raceway covers by sliding them off of their tracks, then lift power cord out of raceways, as shown in **Figure 44**.



Figure 44. Power cord removal.

3. Open blast cabinet door.

4. Have assistant hold work hanger shown in **Figure 45** to avoid possibility of it falling when (4) front cover screws are removed in next step.

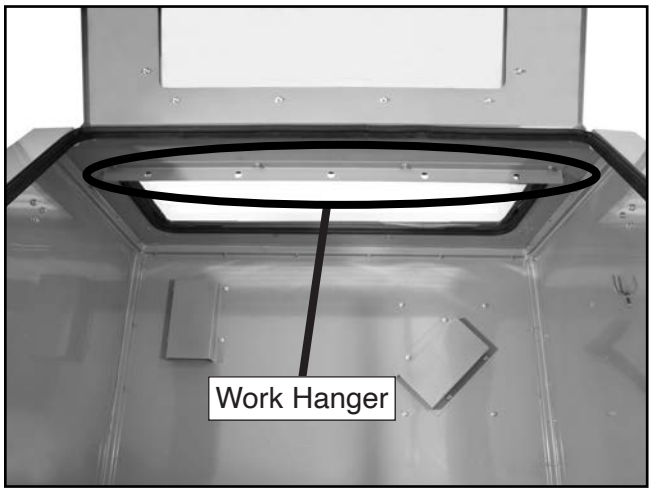

Figure 45. Work hanger location.

5. Loosen (but do not remove) (4) work hanger screws shown in **Figure 46**, then remove remaining (8) LED cover screws.



Figure 46. Location of work hanger screws.

6. Put on leather gloves and safety goggles.

7. Lift LED cover, as shown in **Figure 46**, and carefully pull it toward you so cover slides out from under (4) screws. Make sure not to break sheet of glass that is resting on rubber cabinet seal under LED cover.

8. With help of assistant, place LED housing on top of cabinet, facing upwards, as shown in **Figure 47.**



Figure 47. LED housing facing upwards.

9. Lift sheet of glass off cabinet, and set it on workbench for cleaning.

10. Disconnect any cords attached to LED you want to replace, and remove LED (see **Figure 48**).

Note: *LEDs are held in place by spring clamps.*

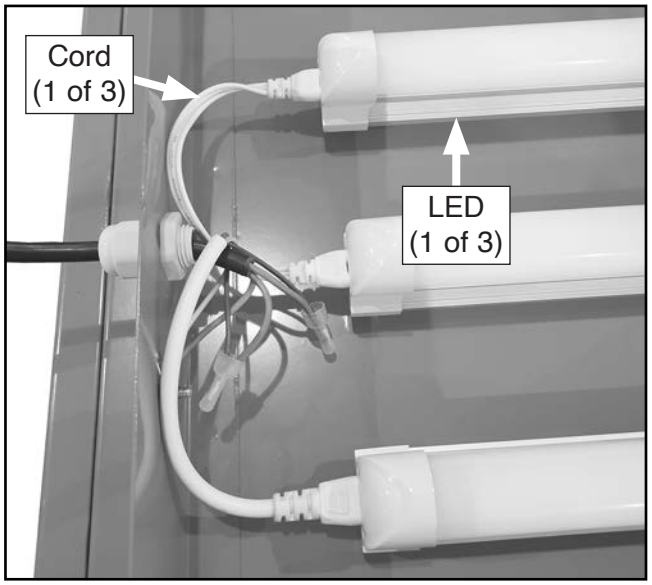

Figure 48. Cords attached to LEDs.

11. Install new LED and connect to cord(s) disconnected in **Step 10**.

12. Connect machine to power and toggle LIGHT switch to ON position to test new lights.

— If all lights light quickly without much flickering or lag, lights are fully functional.

— If any lights struggle for more than five seconds, are dim, or do not light, check cord/wire connections.

Note: *Refer to wiring diagram on **Page 39** if you are unsure about wiring connections.*

13. DISCONNECT MACHINE FROM POWER!

14. Inspect window seal and its surface for evidence of dust streaking between glass and seal, and cabinet and seal.

Make sure that seal is free of any physical damage. Replace or reseal accordingly, but never use glue, caulking, or silicone of any kind between window and its seal, as this will permanently fasten glass to cabinet. Seal is established my means of vacuum created by dust collector.

15. Peel off old adhesive window protection film from glass window.

16. Using paint brush with solution of warm water and dish soap, rinse all dust and abrasives off of window. Do not rub glass with rag or abrasives will scratch surface.

17. Use mineral spirits to break down any adhesive residue leftover from protective film.

18. Clean window with glass cleaner and soft cotton rag.

19. When window is fully dry, affix new protective film.

20. Re-assemble cabinet in reverse order, making sure to install glass window so protective film is toward inside of blast cabinet.

SECTION 8: WIRING

These pages are current at the time of printing. However, in the spirit of improvement, we may make changes to the electrical systems of future machines. Study this section carefully. If there are differences between your machine and what is shown in this section, call Technical Support at (570) 546-9663 for assistance BEFORE making any changes to the wiring on your machine.

⚠WARNING
Wiring Safety Instructions

SHOCK HAZARD. Working on wiring that is connected to a power source is extremely dangerous. Touching electrified parts will result in personal injury including but not limited to severe burns, electrocution, or death. Disconnect the power from the machine before servicing electrical components!

MODIFICATIONS. Modifying the wiring beyond what is shown in the diagram may lead to unpredictable results, including serious injury or fire. This includes the installation of unapproved aftermarket parts.

WIRE CONNECTIONS. All connections must be tight to prevent wires from loosening during machine operation. Double-check all wires disconnected or connected during any wiring task to ensure tight connections.

CIRCUIT REQUIREMENTS. You MUST follow the requirements at the beginning of this manual when connecting your machine to a power source.

WIRE/COMPONENT DAMAGE. Damaged wires or components increase the risk of serious personal injury, fire, or machine damage. If you notice that any wires or components are damaged while performing a wiring task, replace those wires or components.

MOTOR WIRING. The motor wiring shown in these diagrams is current at the time of printing but may not match your machine. If you find this to be the case, use the wiring diagram inside the motor junction box.

CAPACITORS/INVERTERS. Some capacitors and power inverters store an electrical charge for up to 10 minutes after being disconnected from the power source. To reduce the risk of being shocked, wait at least this long before working on capacitors.

EXPERIENCING DIFFICULTIES. If you are experiencing difficulties understanding the information included in this section, contact our Technical Support at (570) 546-9663.

NOTICE

The photos and diagrams included in this section are best viewed in color. You can view these pages in color at www.grizzly.com.

COLOR KEY

BLACK	Bk	BLUE	Bl	YELLOW	Yl	LIGHT BLUE	Lb
WHITE	Wt	BROWN	Br	YELLOW GREEN	Yg	BLUE WHITE	Bw
GREEN	Gn	GRAY	Gy	PURPLE	Pu	TURQUOISE	Tu
RED	Rd	ORANGE	Or	PINK	Pk		

Wiring Diagram

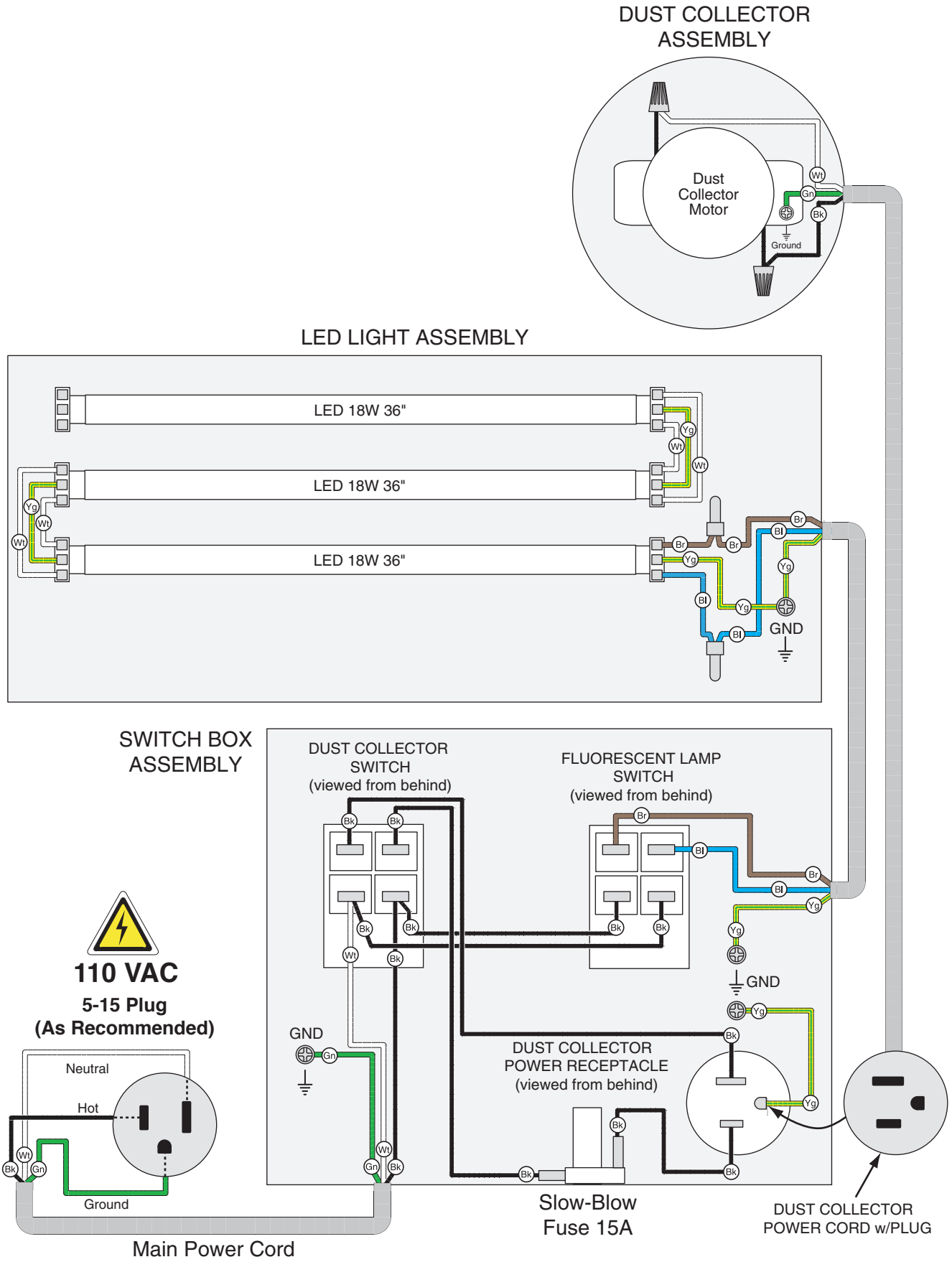

Wiring Components

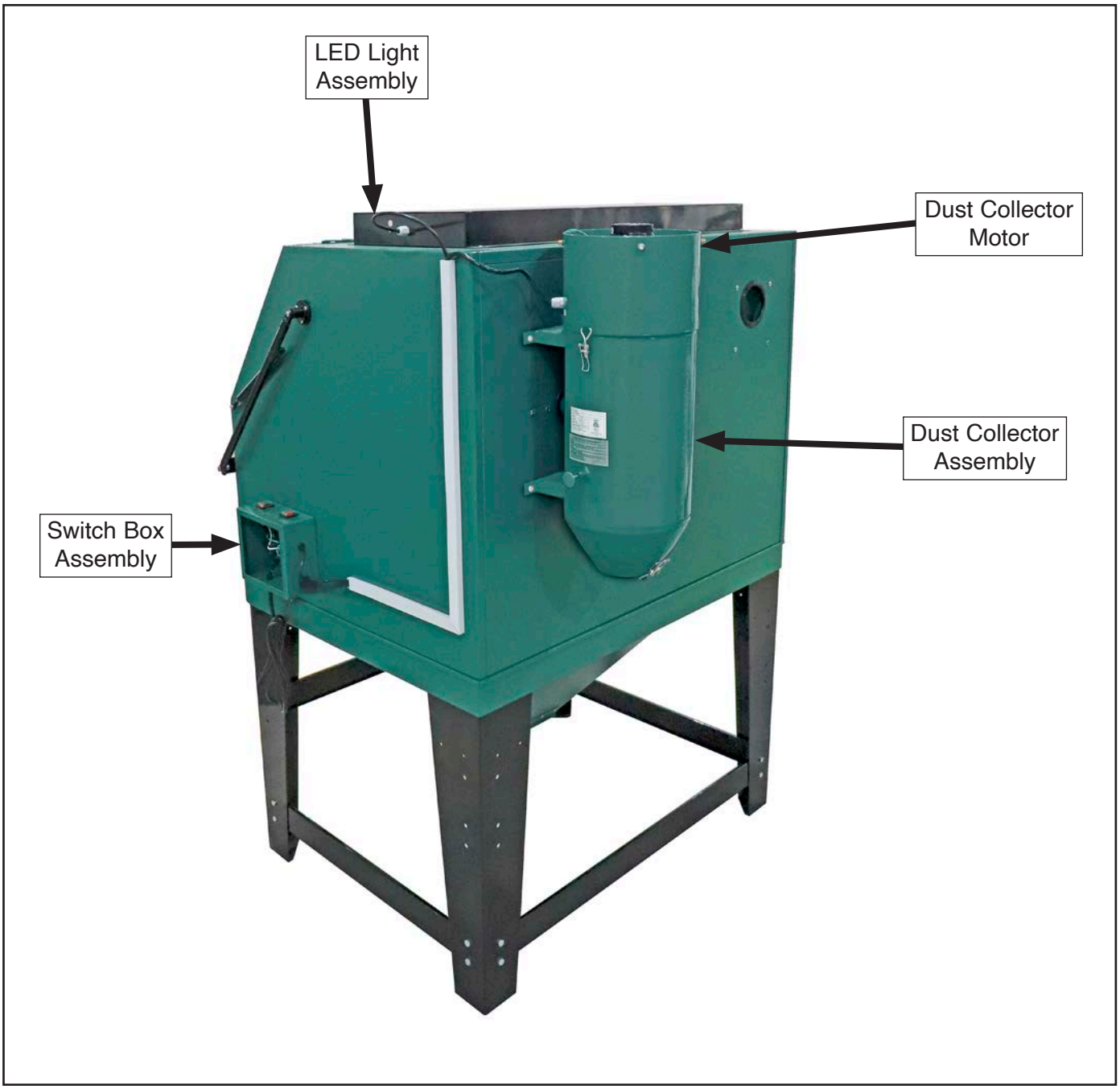

Figure 49. Wiring component locations.

READ ELECTRICAL SAFETY ON PAGE 38!

SECTION 9: PARTS

We do our best to stock replacement parts when possible, but we cannot guarantee that all parts shown are available for purchase. Call **(800) 523-4777** or visit **www.grizzly.com/parts** to check for availability.

Blast Cabinet

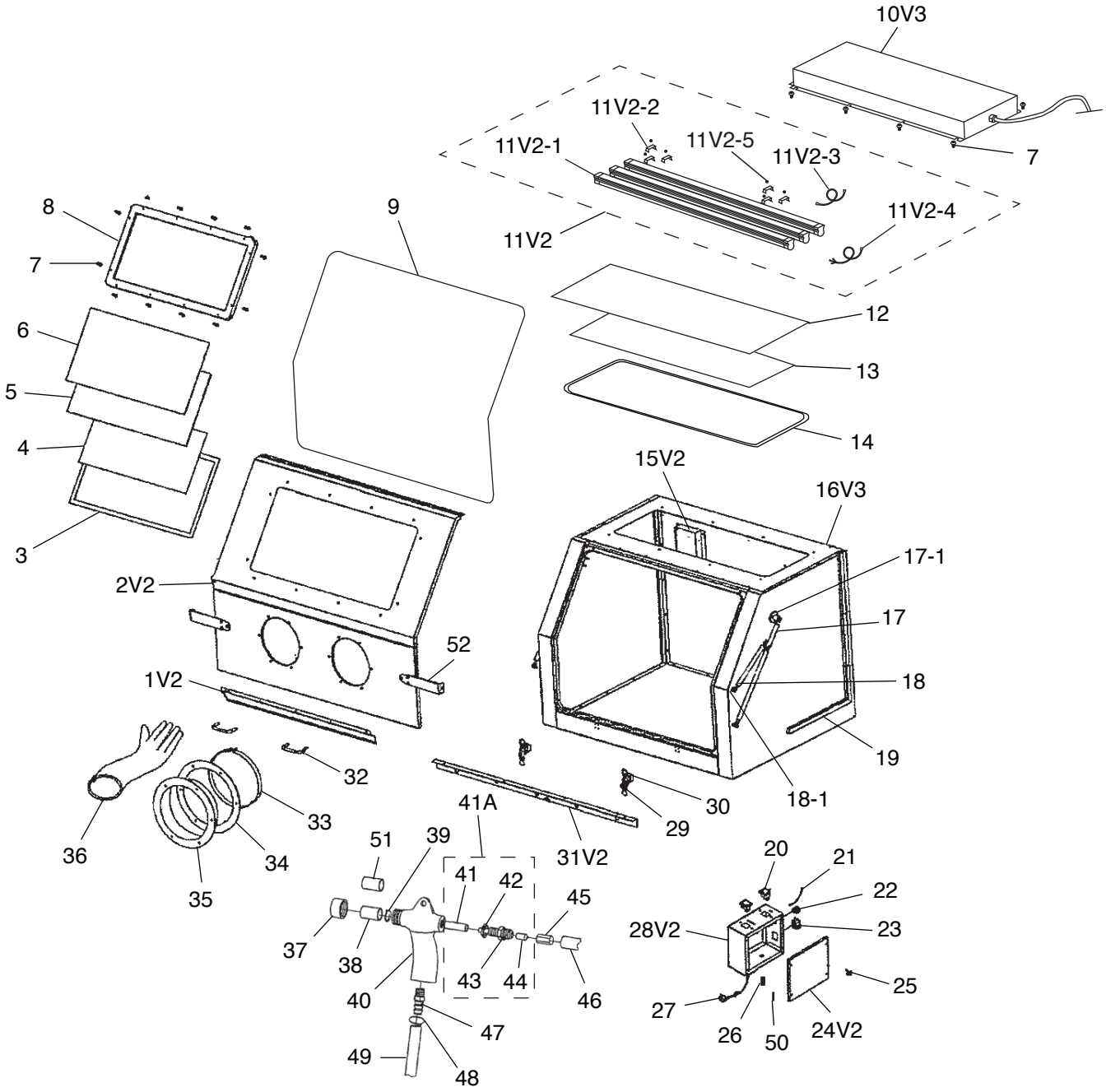

BUY PARTS ONLINE AT GRIZZLY.COM!
Scan QR code to visit our Parts Store.

Blast Cabinet Parts List

REF	PART #	DESCRIPTION
1V2	P0714001V2	HANGER BRACKET V2.03.24
2V2	P0714002V2	FRONT DOOR V2.03.24
3	P0714003	FRONT WINDOW SEAL
4	P0714004	FRONT WINDOW REPLACEMENT FILM
5	P0714005	INNER FRONT WINDOW
6	P0714006	OUTER FRONT WINDOW
7	P0714007	PHLP HD SCR M6-1 X 35
8	P0714008	FRONT WINDOW FRAME
9	P0714009	FRONT DOOR SEAL
10V3	P0714010V3	LIGHT COVER V3.03.24
11V2	P0714011V2	LED LIGHT ASSEMBLY V2.05.22
11V2-1	P0714011V2-1	LED 18W 36"
11V2-2	P0714011V2-2	LIGHT BRACKET
11V2-3	P0714011V2-3	LED 3-PIN CABLE
11V2-4	P0714011V2-4	MAIN LED CORD 20G 3W 8"
11V2-5	P0714011V2-5	RIVET 4 X 10MM BLIND
12	P0714012	LIGHT WINDOW
13	P0714013	LIGHT WINDOW PROTECT FILM
14	P0714014	LIGHT WINDOW SEAL
15V2	P0714015V2	VENT COVER V2.03.24
16V3	P0714016V3	BLAST CABINET V3.03.24
17	P0714017	FRONT DOOR SUPPORT
17-1	P0714017-1	SIDE ANCHOR POINT
18	P0714018	GAS SPRING
18-1	P0714018-1	SIDE ANCHOR POINT
19	P0714019	CORD RACEWAY
20	P0714020	ON/OFF SWITCH
21	P0714021	LIGHT CORD 16AWG 3C 5'
22	P0714022	WIRE CLIP
23	P0714023	ELECTRICAL RECEPTACLE 5-15

REF	PART #	DESCRIPTION
24V2	P0714024V2	SWITCH BOX COVER V2.03.24
25	P0714025	TAP SCREW M4 X 6
26	P0714026	FUSE HOLDER ASSEMBLY
27	P0714027	POWER CORD 14AWG 3C 6' 5-15
28V2	P0714028V2	SWITCH BOX V2.03.24
29	P0714029	LATCH
30	P0714030	LATCH BRACKET
31V2	P0714031V2	WORK HANGER V2.03.24
32	P0714032	FRONT DOOR HANDLE
33	P0714033	GLOVE CLAMP
34	P0714034	INNER GLOVE RING
35	P0714035	OUTER GLOVE RING
36	P0714036	GLOVE SET LEFT AND RIGHT
37	P0714037	NOZZLE CAP
38	P0714038	BLAST NOZZLE 6MM ID
39	P0714039	SEAL
40	P0714040	BLAST GUN BODY
41	P0714041	SLEEVE
41A	P0714041A	HOSE CONNECTOR 1/4" ASSEMBLY
42	P0714042	LOCK COLLAR
43	P0714043	HOSE CONNECTOR 1/4"
44	P0714044	QUICK CONNECTOR 12-G 1/4"
45	P0714045	ADAPTER
46	P0714046	AIR HOSE
47	P0714047	HOSE CONNECTOR 3/8"
48	P0714048	HOSE CLAMP
49	P0714049	SAND HOSE
50	P0714050	FUSE 15A 20 X 80MM
51	P0714051	BLAST NOZZLE 7MM ID

BUY PARTS ONLINE AT GRIZZLY.COM!
Scan QR code to visit our Parts Store.

Stand & Cabinet Base

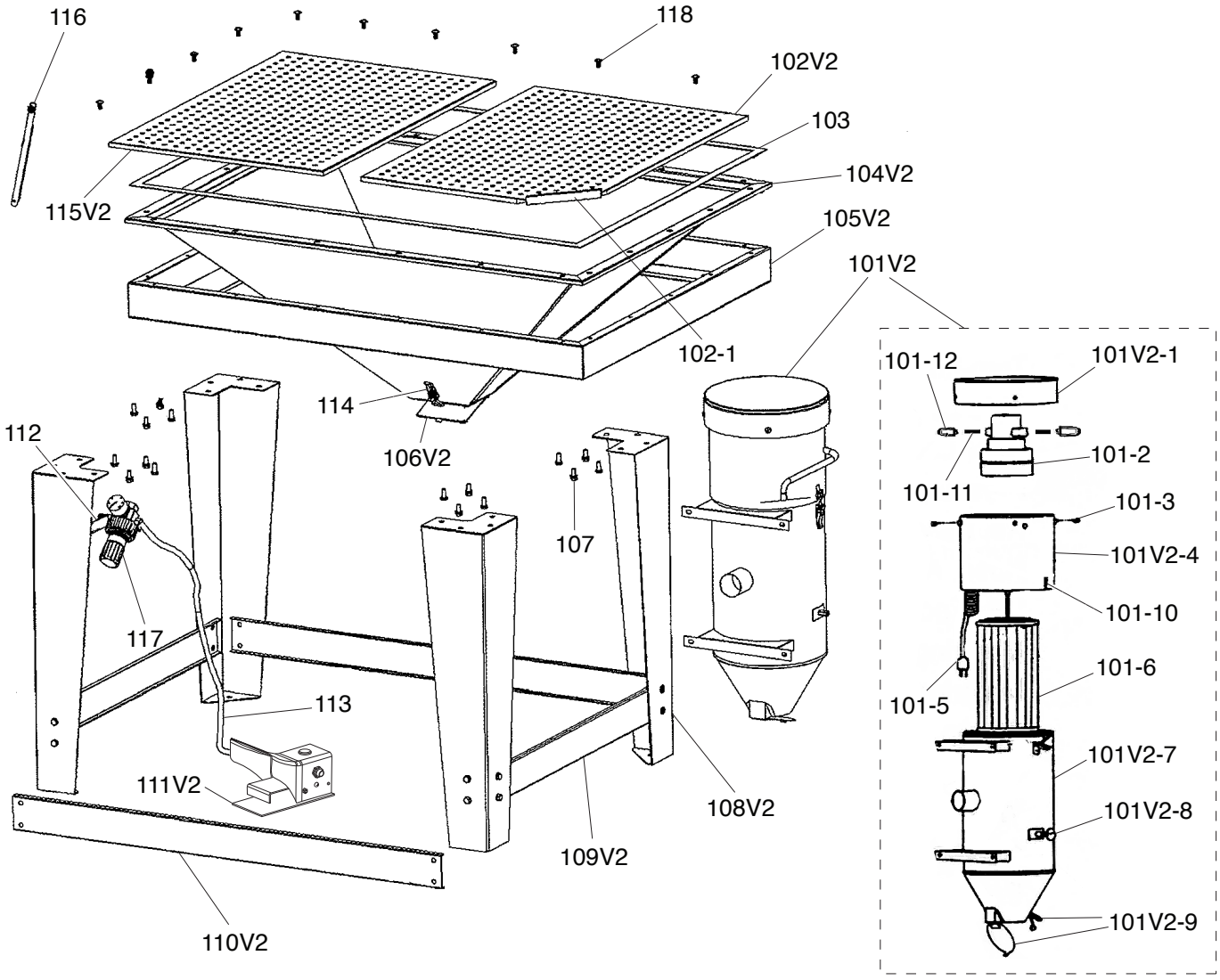

REF	PART #	DESCRIPTION
101V2	P0714101V2	DUST COLLECTOR ASSY V2.03.24
101V2-1	P0714101V2-1	MOTOR COVER
101-2	P0714101-2	MOTOR 1.5HP 110V 1-PH
101-3	P0714101-3	PHLP HD SCR M6-1 X 12
101V2-4	P0714101V2-4	FILTER HOUSING
101-5	P0714101-5	POWER CORD 14AWG 3C 4' 5-15
101-6	P0714101-6	CARTRIDGE FILTER 5 MICRON
101V2-7	P0714101V2-7	CANISTER
101V2-8	P0714101V2-8	CANISTER PLUNGER ASSEMBLY
101V2-9	P0714101V2-9	DOOR W/HINGE & LATCH ASSY
101-10	P0714101-10	HOUSING LATCH ASSEMBLY
101-11	P0714101-11	CARBON BRUSH SET 1-PAIR
101-12	P0714101-12	BRUSH HOLDER
102V2	P0714102V2	RIGHT WORK TABLE V2.03.24
102-1	P0714102-1	RUBBER PROTECTOR
103	P0714103	HOPPER SEAL

REF	PART #	DESCRIPTION
104V2	P0714104V2	HOPPER V2.03.24
105V2	P0714105V2	HOPPER SUPPORT V2.03.24
106V2	P0714106V2	HOPPER DUMP DOOR V2.03.24
107	P0714107	HEX BOLT M8-1.25 X 20
108V2	P0714108V2	LEG V2.03.24
109V2	P0714109V2	SHORT BRACE 32-1/4" V2.03.24
110V2	P0714110V2	LONG BRACE 43-3/4" V2.03.24
111V2	P0714111V2	FOOT VALVE ASSEMBLY V2.03.24
112	P0714112	AIR REGULATOR BRACKET
113	P0714113	AIR HOSE
114	P0714114	FUNNEL DRAIN DOOR LATCH
115V2	P0714115V2	LEFT WORK TABLE V2.03.24
116	P0714116	SUCTION TUBE
117	P0714117	AIR REGULATOR ASSEMBLY 0-125MPA
118	P0714118	PHLP HD SCR M6-1 X 16

BUY PARTS ONLINE AT GRIZZLY.COM!
Scan QR code to visit our Parts Store.

Labels & Cosmetics

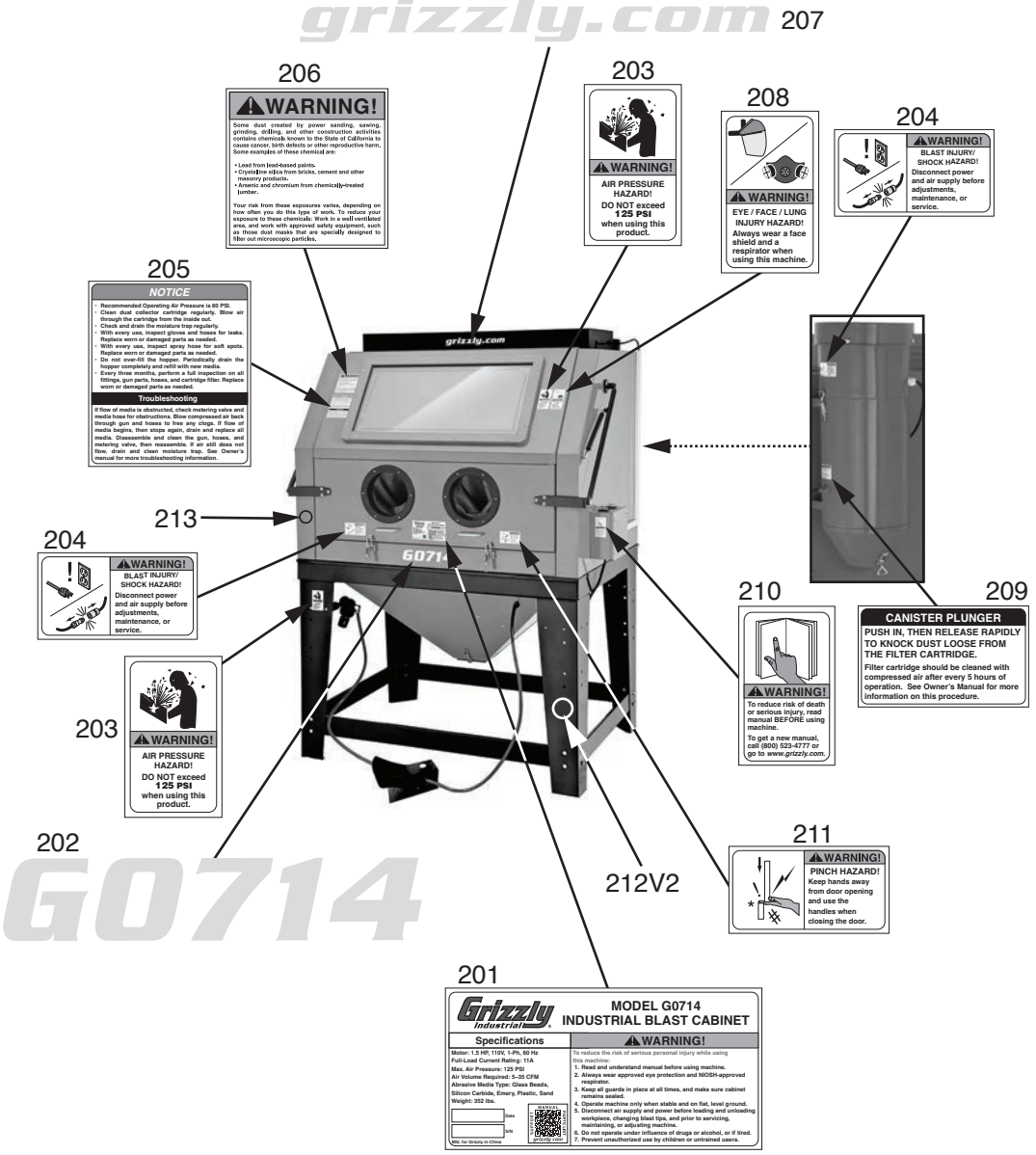

REF	PART #	DESCRIPTION
201	P0714201	MACHINE ID LABEL
202	P0714202	MODEL NUMBER LABEL
203	P0714203	AIR PRESSURE HAZARD LABEL
204	P0714204	DISCONNECT WARNING LABEL
205	P0714205	NOTICE/TROUBLESHOOTING LABEL
206	P0714206	DUST HAZARD WARNING LABEL
207	P0714207	GRIZZLY.COM LABEL

REF	PART #	DESCRIPTION
208	P0714208	GOGGLES/RESP. WARNING LABEL
209	P0714209	PLUNGER INSTRUCTION LABEL
210	P0714210	READ MANUAL LABEL
211	P0714211	PINCH HAZARD LABEL
212V2	P0714212V2	TOUCH-UP PAINT, GRIZZLY BLACK
213	P0714213	TOUCH-UP PAINT, GRIZZLY GREEN

⚠WARNING

Safety labels help reduce the risk of serious injury caused by machine hazards. If any label comes off or becomes unreadable, the owner of this machine MUST replace it in the original location before resuming operations. For replacements, contact (800) 523-4777 or www.grizzly.com.

BUY PARTS ONLINE AT GRIZZLY.COM!
Scan QR code to visit our Parts Store.

WARRANTY & RETURNS

Grizzly Industrial, Inc. warrants every product it sells for a period of **1 year** to the original purchaser from the date of purchase. This warranty does not apply to defects due directly or indirectly to misuse, abuse, negligence, accidents, repairs or alterations or lack of maintenance. This is Grizzly's sole written warranty and any and all warranties that may be implied by law, including any merchantability or fitness, for any particular purpose, are hereby limited to the duration of this written warranty. We do not warrant or represent that the merchandise complies with the provisions of any law or acts unless the manufacturer so warrants. In no event shall Grizzly's liability under this warranty exceed the purchase price paid for the product and any legal actions brought against Grizzly shall be tried in the State of Washington, County of Whatcom.

We shall in no event be liable for death, injuries to persons or property or for incidental, contingent, special, or consequential damages arising from the use of our products.

The manufacturers reserve the right to change specifications at any time because they constantly strive to achieve better quality equipment. We make every effort to ensure that our products meet high quality and durability standards and we hope you never need to use this warranty.

In the event you need to use this warranty, contact us by mail or phone and give us all the details. We will then issue you a "Return Number," which must be clearly posted on the outside as well as the inside of the carton. We will not accept any item back without this number. Proof of purchase must accompany the merchandise.

Please feel free to write or call us if you have any questions about the machine or the manual.

Thank you again for your business and continued support. We hope to serve you again soon.

For further information about the warranty, visit **https://www.grizzly.com/forms/warranty** or scan the QR code below to be automatically directed to our warranty page.

WARRANTY

grizzly.com

grizzly.com®

TOOL WEBSITE

Buy Direct and Save with Grizzly® – Trusted, Proven and a Great Value!

~Since 1983~

Visit Our Website Today For Current Specials!

ORDER

24 HOURS A DAY!

1-800-523-4777

