Operation

Rotating the vise handle (see **Figure 4**) clockwise moves the movable jaw toward the fixed jaw.

Rotating the vise handle counterclockwise moves the movable jaw away from the fixed jaw.

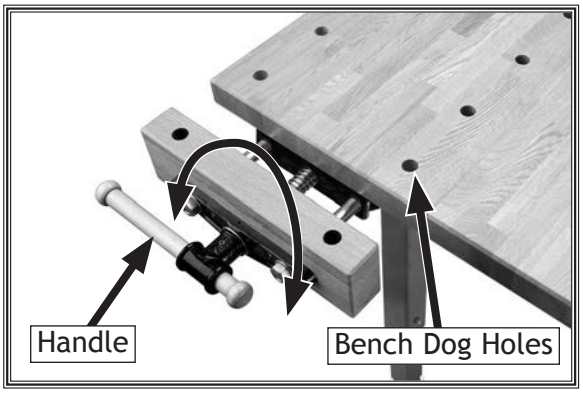

Figure 4. Vise operation.

Maintenance

The painted parts of the vise can be cleaned with a damp rag. If wood pitch has built up on the components, clean this with a pitch-dissolver or blade and bit cleaner.

Lubricate the leadscrew with a dry lubrication, such as silicone or graphite, that will not cause sawdust to stick to the threads.

If material becomes built up on the threads, clean thoroughly with a pitch-dissolver.

D4648 Parts

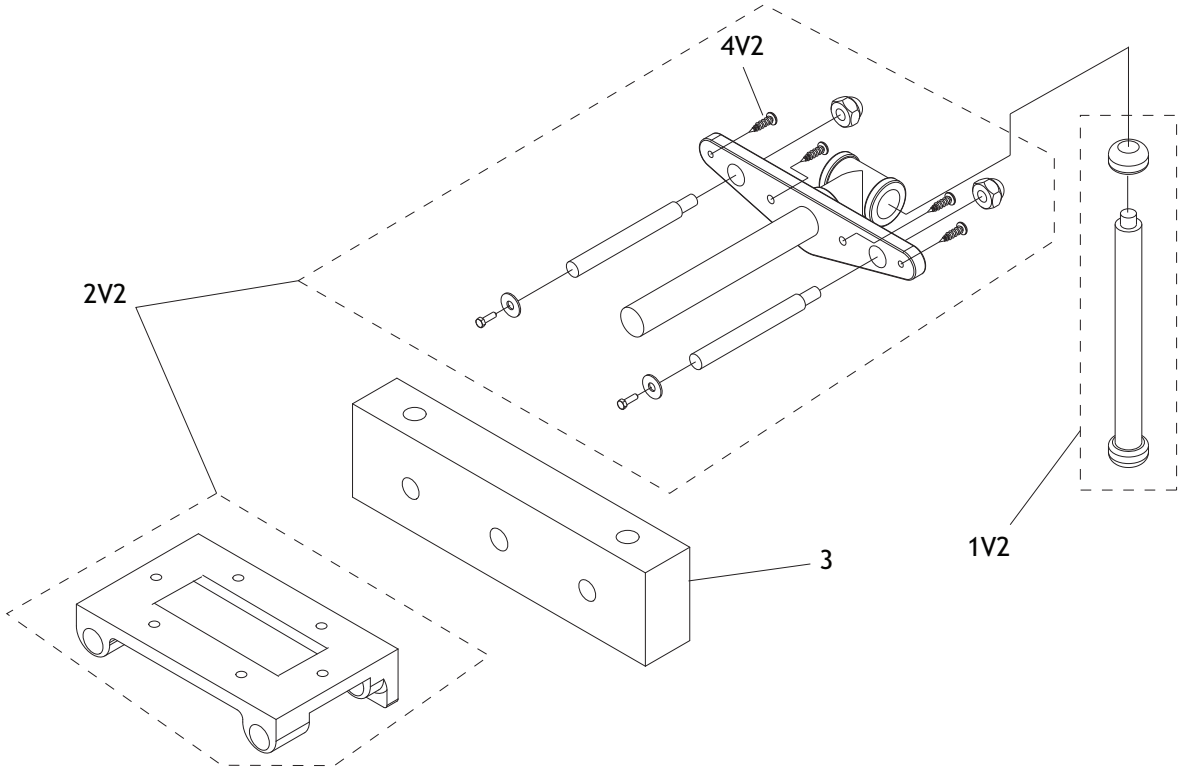

REF	PART #	DESCRIPTION
1V2	XD4648001V2	VISE HANDLE ASSEMBLY V2.07.19
2V2	XD4648002V2	VISE SET ASSEMBLY V2.07.19

REF	PART #	DESCRIPTION
3	XD4648003	WOODEN VISE FACE, BIRCH
4V2	XD4648004V2	WOOD SCREW #8 X 1 V2.07.19