Model D4648
Cabinet Maker's Front Vise
Instruction Sheet

Phone #: (360) 647-0802 • Tech Support: techsupport@shopfoxtools.com • Web: www.shopfoxtools.com

Introduction

Your new Front Vise (see **Figure 1**) is designed to fit on workbenches 1½" thick. The front vise features a solid hardwood clamping jaw pad.

Specifications

Model	Jaw Width	Workbench Thickness	Max. Jaw Opening	Weight
D4648	13"	1½"	5⅞"	13 lbs.

Installation

The Cabinet Maker's Front Vise does not come fully assembled from the factory and mounting hardware is not provided with this front vise.

1. With help from an assistant, hold front vise up against workbench in desired mounting location.

   Note: *If your workbench has holes for bench dogs, ensure bench dog holes on top of vise jaw (see **Figure 1** and **Figure 4** on **Page 2**) align with those holes.*

2. Use a pencil to mark underside of workbench through six vise mounting holes (see **Figure 2**) to drill pilot holes in workbench.

3. Use a ⅛" drill bit to drill pilot holes approximately 1" deep in underside of workbench (see **Figure 3**).

4. Attach vise assembly to workbench using (4) #10 x 1" wood screws through underside of workbench, as shown in **Figure 3**.

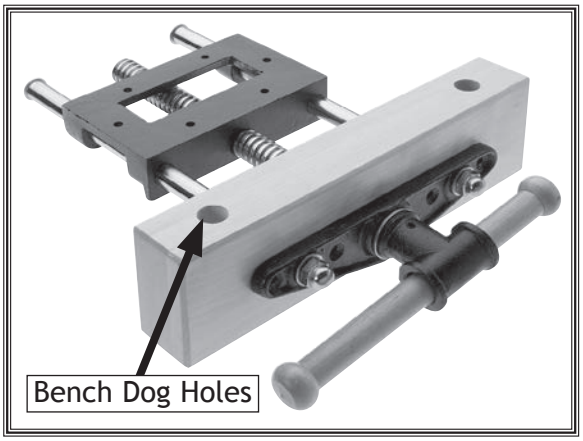

Figure 1. Model D4648 front vise.

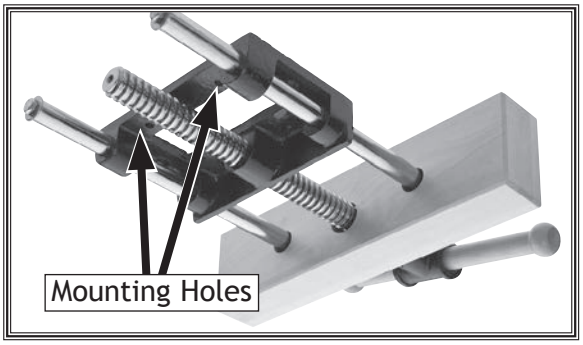

Figure 2. Mounting hole locations (viewed from below).

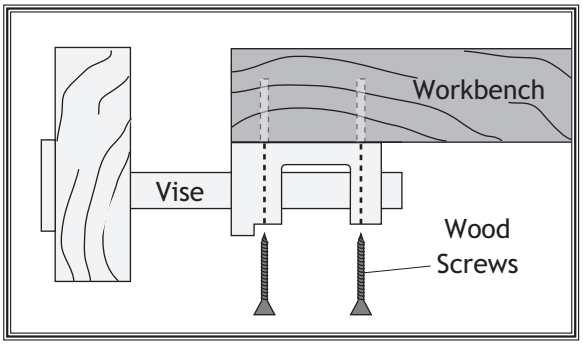

Figure 3. Mounting diagram.

COPYRIGHT © AUGUST, 2017 BY GRIZZLY INDUSTRIAL, REVISED MARCH, 2025 (CM)
WARNING: NO PORTION OF THIS MANUAL MAY BE REPRODUCED IN ANY SHAPE OR FORM WITHOUT THE WRITTEN APPROVAL OF GRIZZLY INDUSTRIAL, INC.

V2.03.25 #19127JH Printed in China

Keep for Future Reference

Operation

Rotating the vise handle (see **Figure 4**) clockwise moves the movable jaw toward the fixed jaw.

Rotating the vise handle counterclockwise moves the movable jaw away from the fixed jaw.

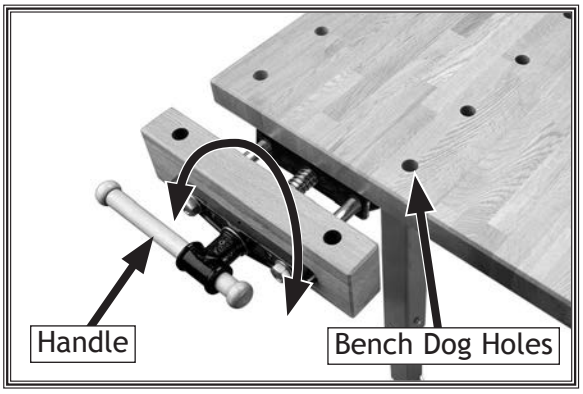

Figure 4. Vise operation.

Maintenance

The painted parts of the vise can be cleaned with a damp rag. If wood pitch has built up on the components, clean this with a pitch-dissolver or blade and bit cleaner.

Lubricate the leadscrew with a dry lubrication, such as silicone or graphite, that will not cause sawdust to stick to the threads.

If material becomes built up on the threads, clean thoroughly with a pitch-dissolver.

D4648 Parts

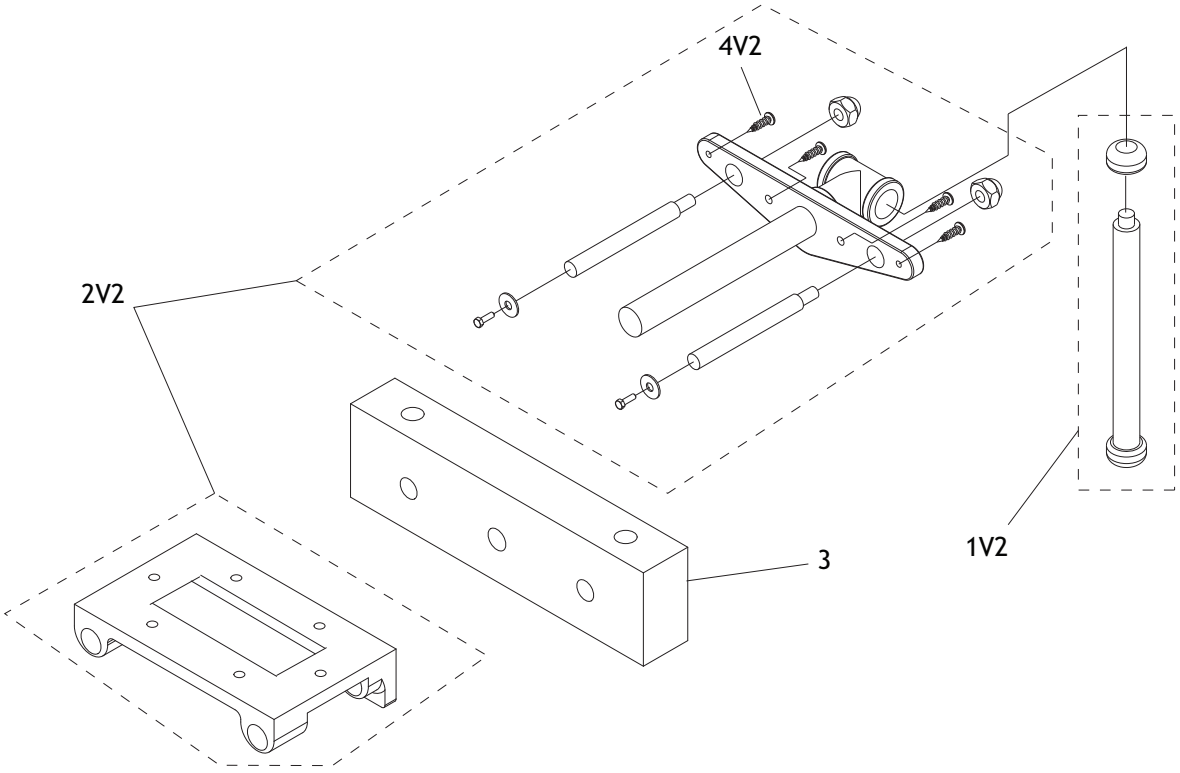

REF	PART #	DESCRIPTION
1V2	XD4648001V2	VISE HANDLE ASSEMBLY V2.07.19
2V2	XD4648002V2	VISE SET ASSEMBLY V2.07.19

REF	PART #	DESCRIPTION
3	XD4648003	WOODEN VISE FACE, BIRCH
4V2	XD4648004V2	WOOD SCREW #8 X 1 V2.07.19