HD PRO

Operator's Manual
Manuel de l'utilisateur

GRAVELY

MADE IN THE UNITED STATES
WITH PARTS GLOBALLY SOURCED

Models

991297 – HD Pro 48
(SN 000101 +)

991298 – HD Pro 52
(SN 000101 +)

991299 – HD Pro 60
(SN 000101 +)

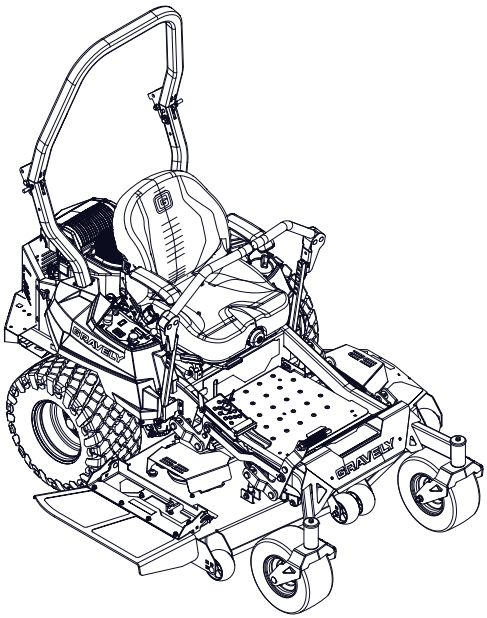

E10 E15 E20 E85

EN **ENGLISH**

FR **FRANÇAIS**

REGISTER YOUR PRODUCT!

30352100 • 10/26
Printed in USA

TABLE OF CONTENTS

WELCOME **1**
Register Your Product! 1
SAFETY **2**
Practices & Laws 2
Emission Control System 2
Required Operator Training 2
Safety Alert Symbol 2
Signal Words 2
Safety Decals 3
Safety Instructions 6
ASSEMBLY **9**
CONTROLS AND FEATURES **11**
Ignition Key 13
Choke Control Knob 13
Throttle Control Lever 13
Power-Take-Off (PTO) Knob 13
Hour Meter 13
Height-of-Cut Adjustment System 13
Transport Lock 14
Transport Lock Release Lever 14
Deck Lift Pedal 14
Seat Adjustment Lever 14
Parking Brake Lever 14
Safety Interlock System 14
Steering Levers 14
Transaxle Bypass Levers 14
Anti-scalp Wheel 14
Seat Latch Release Lever 14
BEFORE OPERATION **15**
Set Cutting Height 15
Adjust Seat 16
Adjust Steering Levers 16
Position ROPS 17
OPERATION **19**
Emergency Stopping 19
Start the Engine 19
Operate Unit 19
Stop the Engine 20
Move Unit Manually 20
Transport Unit 20
Release Transport Lock 20
MAINTENANCE **21**
Service Position 21
Maintenance Schedule 22
Service Parts 22
Clean Mower Deck 22
Check Safety Interlock System 22
Check Parking Brake 23
Check Engine Oil 23
Check Tire Pressure 23
Check Fasteners 23
Lubricate Unit 23
Check Mower Blades 23
Battery Service 24
Check Mower Belts 25
Check Hydraulic System 26
SERVICE & ADJUSTMENTS **27**
Electrical Service 27
Adjust Unit to Drive Straight 28
Adjust Transaxles 28
Adjust Parking Brake 30
Replace Mower Belts 31
Replace Transaxle Drive Belt 33
Adjust Anti-Scalp Wheels 34
Adjust Deck Lift-Assist 34
Remove and Install Mower Deck 35
Level & Pitch Mower Deck 37
TROUBLESHOOTING **39**
STORAGE **41**
Short-Term Storage 41
Long-Term Storage 41
Start-of-Season Preparation 41
ACCESSORIES **41**
SPECIFICATIONS **43**
NON-STANDARD TORQUE VALUES **44**
WARRANTY **45**

WELCOME

REGISTER YOUR PRODUCT!

It is extremely important to register your product at time of purchase. Product registration activates the warranty and establishes a communication link from AriensCo.

Locate the model and serial number decal on your unit and register those numbers online at www.gravely.com. See Figure 1 for decal location. Be aware that the original selling dealer may have already completed product registration on behalf of the original purchaser.

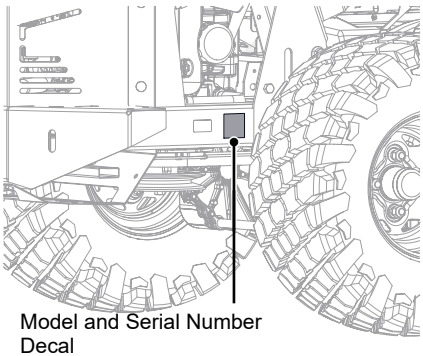

Model and Serial Number Decal

Figure 1

Record model number here.

Record serial number here.

MANUALS

Before operating or servicing the unit, carefully and completely read the manuals provided with the unit. They contain safety instructions and important information about unit controls.

The engine on this unit is covered by a separate manual. Refer to the engine manual for engine service recommendations. Contact the engine manufacturer for a replacement manual if necessary.

Your dealer must review important information in this manual with you before or upon delivery of the unit. It is your responsibility to read and understand all safety precautions and instructions in the manuals. If you do not understand or have difficulty following the instructions, contact your Gravely dealer for assistance. To locate your nearest Gravely dealer, go to www.gravely.com.

A parts manual for your unit is available for free download or purchase at www.gravely.com. Manual del operador español está disponible para su descarga gratuita o compra en www.gravely.com.

DISCLAIMER

Gravely reserves the right to discontinue, make changes to, and add improvements upon its products at any time without public notice or obligation. The descriptions and specifications contained in this manual were in effect at printing. Equipment described in this manual may be optional. Some illustrations may not be applicable to your unit.

SAFETY

Read these safety rules and follow them closely. Failure to follow these rules could lead to loss of control of unit, severe personal injury or death to you or bystanders, or result in damage to property or the machine.

PRACTICES & LAWS

Practice usual and customary safe working precautions. Learn applicable rules and laws in your area. Always follow the practices set forth in this manual.

EMISSION CONTROL SYSTEM

This equipment and/or its engine may include exhaust and evaporative emissions control system components required to meet U.S. Environmental Protection Agency (EPA) and/or California Air Resources Board (CARB) regulations. Tampering with emission controls and components by unauthorized personnel may result in severe fines or penalties. Emission controls and components can only be adjusted by an Gravely dealer or an authorized engine manufacturer's service center. Contact your Gravely Equipment Retailer concerning emission controls and component questions.

REQUIRED OPERATOR TRAINING



Read and understand the Operator's Manual and decals on the unit. This information is for your safety and the proper use of your equipment. Failure to follow these instructions and warnings may cause death or serious injury. If you have purchased this product from an Gravely dealer, the dealer can provide you with training.

Familiarize yourself and any other operators with all controls and the safe use of the features of this unit. If you loan, rent or sell this product to others, provide them with all manuals.

If you have any questions, please call our customer support line at 920-756-4688 or contact us at www.gravely.com. Do not use this equipment if, after reading the Operator's Manual and the on-board decals, you have any questions about the safe use of this product.

WARNING: AVOID INJURY. This cutting machine is capable of amputating hands and feet and throwing objects. Failure to observe the safety instructions in the manuals and on decals could result in serious injury or death.

SAFETY ALERT SYMBOL

This is the safety alert symbol. It means:

- **ATTENTION!**
- **YOUR SAFETY IS INVOLVED!**

When you see this symbol:

- **BECOME ALERT!**
- **OBEY THE MESSAGE!**

SIGNAL WORDS

The safety alert symbol above and signal words below are used on decals and in this manual. Read and understand all safety messages.

1. Danger

DANGER: Indicates an IMMINENTLY HAZARDOUS SITUATION! If not avoided, WILL RESULT in death or serious injury.

2. Warning

WARNING: Indicates a POTENTIALLY HAZARDOUS SITUATION! If not avoided, COULD RESULT in death or serious injury.

3. Caution

CAUTION: Indicates a POTENTIALLY HAZARDOUS SITUATION! If not avoided, MAY RESULT in minor or moderate injury. It may also be used to alert against unsafe practices.

4. Notice

NOTICE: Indicates information or procedures that are considered important but not hazard related. If not avoided property damage could result.

5. Important

IMPORTANT: Indicates general reference information worthy of special attention.

SAFETY DECALS

The safety decals on your machine are visual reminders of the important safety information in this manual. All messages on your unit must be fully understood and carefully followed. Safety decals on the machine are explained below.

Safety Decal Locations

ALWAYS replace missing or damaged safety decals. Replacement decal part numbers are found in the parts manual for your machine and may be ordered from your dealer.

See Figure 2 for safety decal locations.

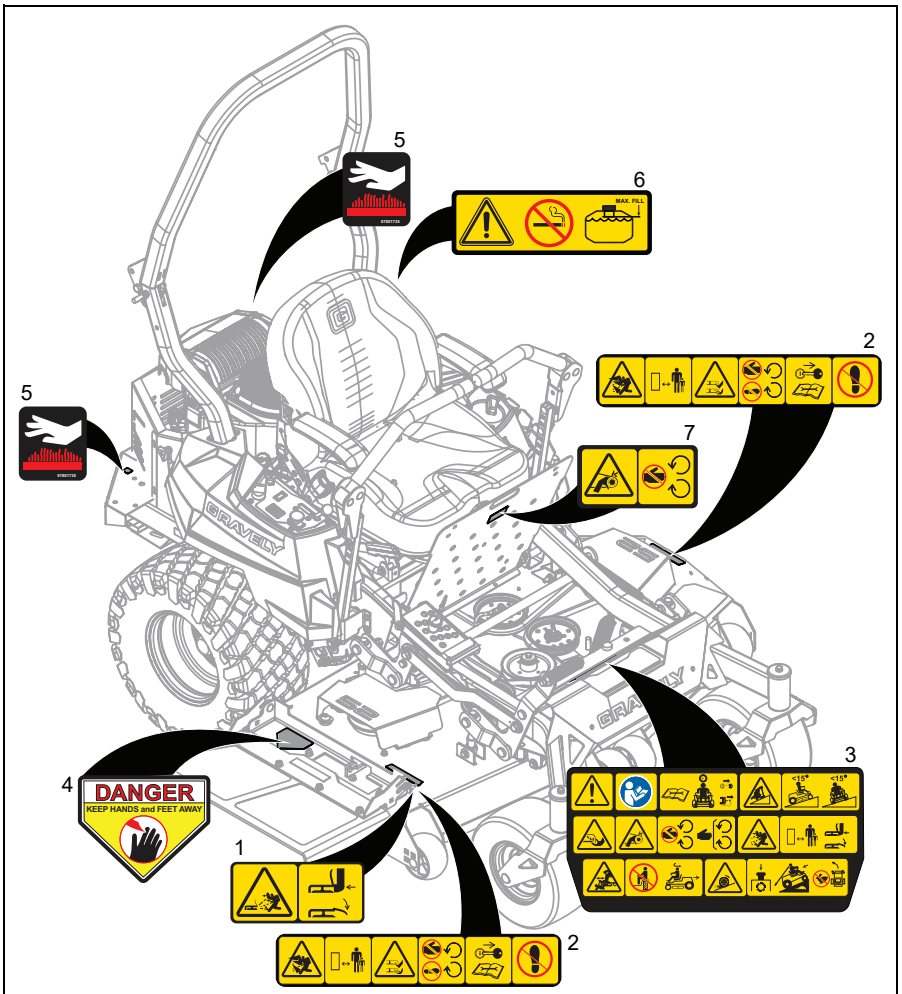

Figure 2

Safety Decal Descriptions

1. DANGER!



Discharge Hazard - NEVER operate unit without discharge chute in operating position. Thrown objects can cause injury or damage.



DO NOT operate mower unless all guards are in operating position or bagger is attached.

2. DANGER!



Discharge Hazard - NEVER direct discharge toward people, pets or property. Thrown objects can cause injury or damage.



Amputation Hazard - NEVER stick hands or feet under deck or shielded areas.



Shut off engine, remove key, and read manual before servicing or making adjustments to unit.



Keep children and others away from unit while unit is in operation.



Keep feet and hands away from all rotating or moving parts.



DO NOT step or stand in this area.

3. DANGER!



DANGER!



Read and understand the operator's manual before operating unit.

3.1 Amputation Hazard



To avoid amputation hazard DO NOT put hands near rotating blades.



To avoid amputation hazard DO NOT put hands near moving belts.



Keep hands away from all rotating or moving parts.



Keep all guards and shields in place.

3.2 Discharge Hazard



Discharge Hazard - NEVER direct discharge toward people, pets or property. Thrown objects can cause injury or damage.

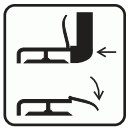

DO NOT operate mower unless all guards are in operating position or bagger is attached.



Keep children and others away from unit while unit is in operation.

3.3 Tipping Hazard



Avoid tipping hazard.



DO NOT operate on slopes over 15°.



DO NOT operate on slopes over 15°.

3.4 Service Hazard



Before servicing unit do the following:



Read owners manual before servicing or making adjustments to unit.



Set parking brake.

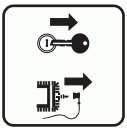

Remove key and disconnect spark plug before servicing or making adjustments to unit.

3.5 Bystander Hazard



DO NOT operate the unit in the presence of bystanders.



DO NOT carry passengers.



Look behind when operating the unit in reverse.

3.6 Loss of Traction Hazard



If loss of traction is experienced do the following:

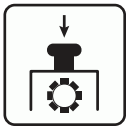

Disengage PTO.



Proceed off slope slowly.



DO NOT try to turn or speed up.

4. DANGER!



ALWAYS keep hands and feet away from discharge chute.

5. HOT PARTS!



DO NOT touch parts which are hot from operation. ALWAYS allow parts to cool.

6. WARNING!



Overfilling may cause severe damage to evaporative system!

- NEVER fill fuel tank when engine is running, hot or unit is indoors. NEVER overfill fuel tank.
- Replace fuel cap securely and clean up spilled fuel.



No smoking.

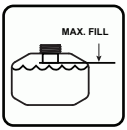

IMPORTANT: DO NOT overfill. Fill fuel tank to below bottom of filler neck.

7. DANGER!



To avoid amputation hazard DO NOT put hands near moving belts.



Keep hands away from all rotating or moving parts.

SAFETY INSTRUCTIONS

The following safety instructions are based on the lawn mower specifications of the American National Standards Institute and ISO in effect at the time of production.

Safe Practices for Ride-On Mowers

If used improperly, this machine is capable of amputating hands and feet and throwing objects. Failure to observe the following safety instructions could result in serious injury or death. Use only for purposes intended as set forth in the Operator's Manual. Other use is improper and may cause serious injury or death.

General Information
Read, understand, and follow instructions and warnings in this manual and on the machine, engine and attachments.
Only allow operators, who are responsible, trained, familiar with the instructions, and physically capable to operate the machine.
DO NOT carry passengers and keep people or pets away from the mowing area.
DO NOT operate the machine while physically or mentally impaired, feeling tired, ill or under the influence of alcohol or drugs.
Follow the manufacturer's recommendation for wheel weights or counterweights.
DO NOT touch parts which are hot. Allow parts to cool.

Preparation Before Operating
Inspect unit before each use for missing or damaged decals and shields, correctly operating safety interlock system, ROPS and deterioration of grass catchers. Replace or repair as needed.
Clear the operating area of all objects which could be thrown by or interfere with operation of the machine.
Keep the area of operation clear of all bystanders, particularly small children. Stop the machine and attachment(s) if anyone enters the area.
DO NOT operate the machine without the entire grass catcher, discharge chute, or other safety devices in place and functioning properly. Check frequently for signs of damage, wear or deterioration and replace as needed.
NEVER tamper with safety devices. Check their proper operation regularly. NEVER do anything to interfere with the intended function of a safety device or to reduce the protection provided by the safety device.
Check parking brake operation frequently. Adjust and service as required.
Wear appropriate personal protective equipment such as safety glasses, hearing protection, and substantial footwear. DO NOT mow barefoot or while wearing sandals.

Operating

Improper use of power equipment can cause serious permanent injury or death to the operator or a bystander. Understand:

- How to operate all controls
- The functions of all controls
- How to STOP in an emergency
- Braking and steering characteristics
- Turning radius and clearances

If the operator or the mechanic cannot read the manual, it is the owner's responsibility to explain it to them.Manuals are available in other languages at www...

Only run the engine in well ventilated areas. Exhaust gases contain carbon monoxide, an odorless deadly poison.

Only operate the machine in daylight or good artificial light.

Avoid holes, ruts, bumps, rocks and other hazards. Uneven terrain could overturn the machine, or cause operator to lose their balance, footing and/or control of the mower.

DO NOT put hands or feet near rotating parts or under the machine. Keep clear of the discharge opening at all times.

Avoid slippery surfaces. ALWAYS be sure of your footing.

Stop engine before removing grass catcher or unclogging chute.

DO NOT direct discharge material toward anyone. Avoid discharging material against a wall or obstruction. Material may ricochet back toward the operator. Stop the blade(s) when crossing gravel surfaces. DO NOT mow into roads or across sidewalks.

DO NOT leave a running machine unattended. ALWAYS park on level ground, disengage the attachment, set parking brake, stop engine and remove key (if applicable) before leaving the operator's position.

DO NOT mow in reverse unless absolutely necessary. ALWAYS look down and behind before and while backing.

Lightning can cause severe injury or death. If lightning is seen or thunder is heard in the area, DO NOT operate the machine; seek shelter.

If you strike a foreign object, stop and inspect the machine. Repair, if necessary, before restarting.

ALWAYS check overhead and side clearances carefully before operation. Keep in mind that your mower deck may be wider than your track width.

Children Specific

Tragic accidents can occur if the operator is not alert to the presence of children. Children are often attracted to the machine and the mowing activity. NEVER assume that children will remain where you last saw them.

Keep children out of the operating area and under the watchful care of a responsible adult other than the operator.

Do not carry children, even with the blade(s) shut off. Children could fall off and be seriously injured or interfere with safe machine operation. Children who have been given rides in the past could suddenly appear in the mowing area for another ride and be run over or backed over.

DO NOT allow children under the age of 18 to operate any outdoor power equipment.

Slope Specific

Slopes are a major factor related to accidents. Operation on slopes requires extra caution. If you feel uneasy on a slope DO NOT mow it. Use the parking brake for emergency stops.

DO Not operate on slopes of more than 15°.

Do not mow within 1.2 M (4 feet) of a drop off. Do not mow within 1.2 M (4 feet) of a pond or other waterway.

The primary hazard of slope operation is loss of control and/or roll over.

Mow up and down slopes, NEVER across. Exercise caution when changing direction on slopes. Use caution while operating near dropoffs.

Avoid mowing wet grass. Wet surfaces can cause a loss of traction and control.

DO NOT operate machine under any condition where traction, steering, or stability is in question. Tires could slide even if the wheels are stopped.

Always keep the machine in gear when going down slopes. Do not coast downhill.

Avoid starting and stopping on slopes. Avoid making sudden changes in speed or direction. Make turns slowly and gradually.
Use extra care while operating machine with a grass catcher or other attachment(s). They can affect the stability of the machine.

Fire and Fuel Specific
Extinguish all cigarettes, cigars, pipes and other sources of ignition.
Use only an approved fuel container.
DO NOT remove fuel cap or add fuel with the engine running or while hot.
DO NOT refuel indoors or in enclosed spaces.
DO NOT store the machine or fuel container, or refuel, where there is an open flame, spark, or pilot light such as on a water heater or other appliance.
If fuel is spilled, DO NOT attempt to start the engine and avoid creating any source of ignition until fuel vapors have dissipated.
To help prevent fires: keep machine free of grass, leaves, or other debris build up; clean up oil or fuel spillage and remove any fuel soaked debris; allow engine to cool before storing.
Use extra care in handling gasoline and other fuels. They are flammable and vapors are explosive.

Hauling
Use a single full-width ramp for loading and unloading a machine for transport. Secure with appropriate straps.

Towing
Follow the manufacturer’s recommendation for weight limits for towed equipment and towing on slopes.

ROPS
The ROPS is an integral safety device. Do not remove or alter the ROPS.
Keep a folding ROPS in the raised and locked position and use the seat belt when operating the machine.
Lower a folding ROPS temporarily only when absolutely necessary. Do not wear the seat belt when folded down. There is no rollover protection when a folding ROPS is in the down position.
Frequently inspect the ROPS and the seatbelt for damage. Replace a damaged ROPS. Do not repair or alter.

Service
Keep machine in good working order. Replace worn or damaged parts.
Use caution when servicing blades. Wrap the blade(s) or wear gloves. Replace damaged blades. DO NOT repair or alter blade(s).
Disconnect spark plug wire(s) and the negative battery cable before making any repairs.
Use only attachments recommended by AriensCo that are appropriate to your use and can be used safely in your application.
The use of non-genuine replacement parts or accessories could adversely affect machine operation and safety.
DO NOT change engine governor setting or overspeed the engine.

ASSEMBLY

WARNING: AVOID INJURY. Read and understand the entire *Safety* section before proceeding.

1. Remove pins and fold crate ends outward.
2. Remove plastic bag from around unit and discard.
3. Remove straps from around unit and discard.
4. Push seat latch release lever down and rotate seat forward. See Figure 28 and 29.

See Figure 3.

5. Remove plastic boot from negative battery terminal and discard.
6. Remove hardware from negative (black) battery cable. DO NOT discard hardware.
7. Secure negative battery cable to negative (open) battery terminal with hardware removed in previous step.

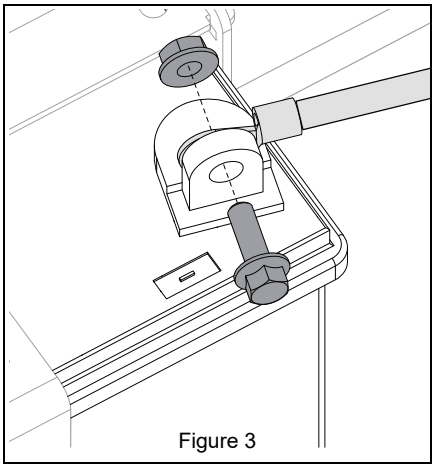

Figure 3

8. Return seat to operating position.
9. Remove hardware retaining eccentric spacer. See Figure 4.

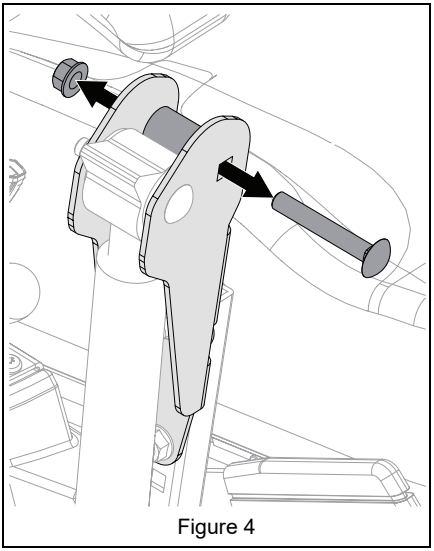

Figure 4

10. Rotate steering lever inward and reinstall eccentric spacer using original hardware. See Figure 5.

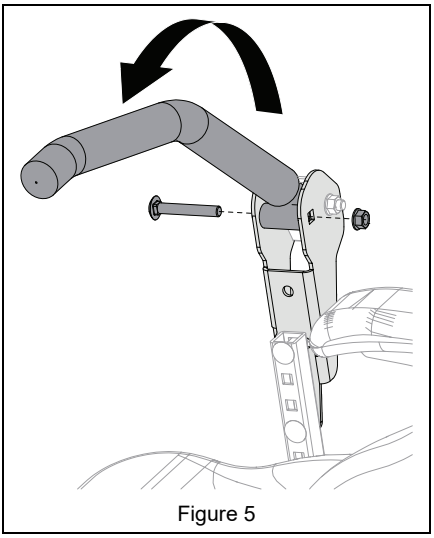

Figure 5

11. Repeat steps 9 – 10 on other side of unit.
12. Adjust steering levers. See *Adjust Unit to Drive Straight* on page 28.
13. Rotate ROPS to operating position and secure with lock pins. Secure lock pins with hairpins. See Figure 24.
14. Push transaxle bypass levers in to engage transaxles. See Figure 6.

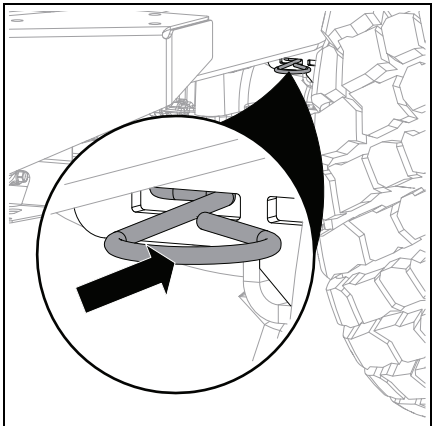

Figure 6

15. Start the engine. See *Start the Engine* on page 19.
16. Release parking brake. See Figure 7.

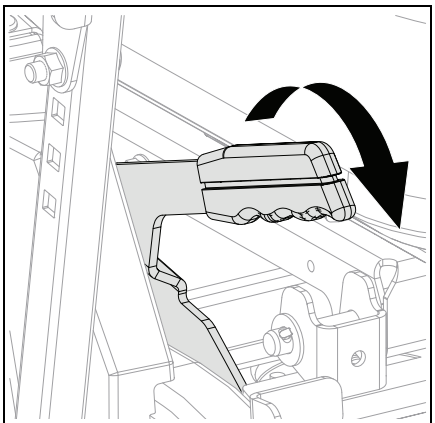

Figure 7

17. Set throttle to slow speed and slowly move steering levers forward to drive unit off crate. See *Operate Unit* on page 19.
18. Stop engine after unit is off crate. See *Stop the Engine* on page 20.
19. Lift discharge chute up slightly and rotate down into operating position. See Figure 8.

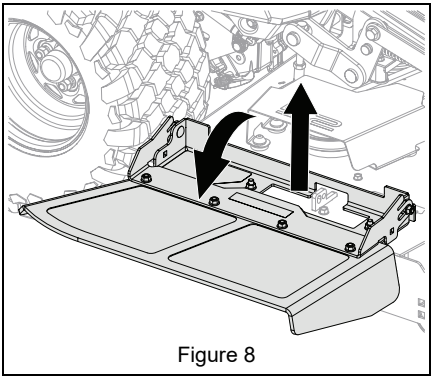

Figure 8

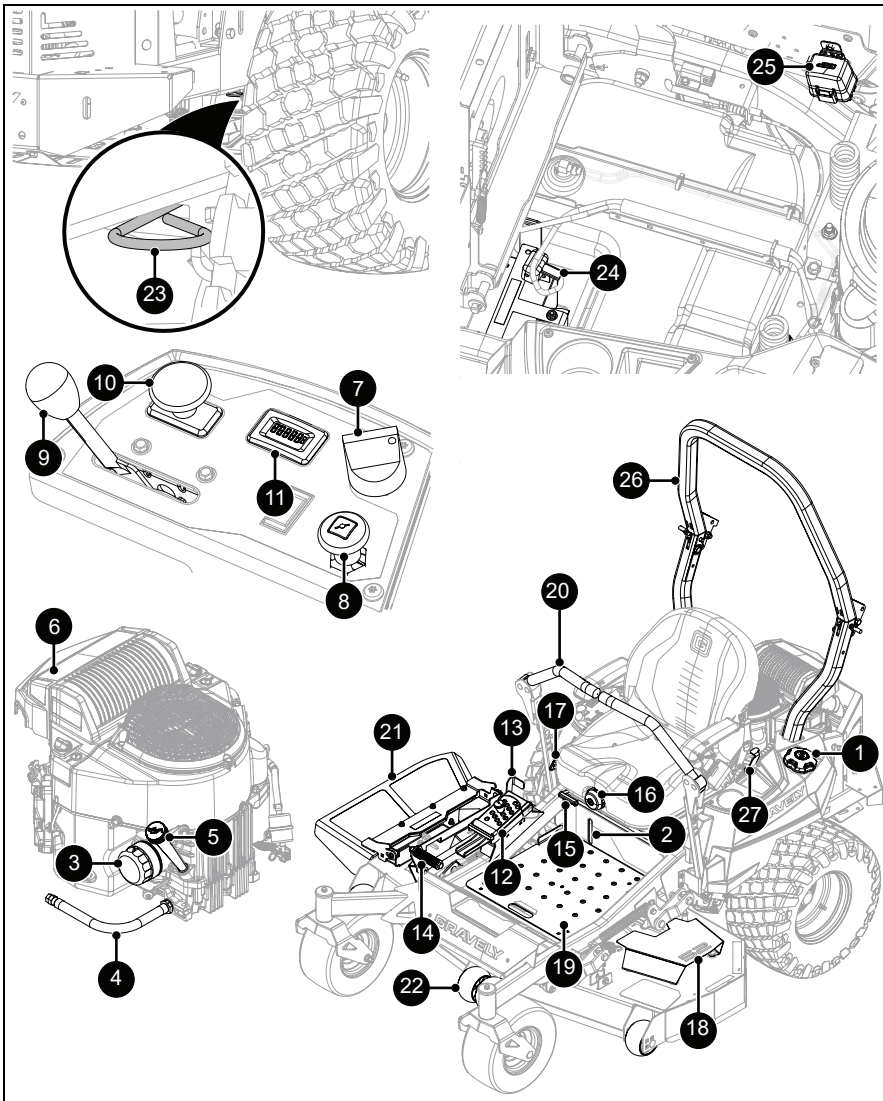

Figure 9

1. Fuel Tank and Cap
2. Fuel Level Window
3. Oil Filter
4. Oil Drain
5. Engine Oil Dipstick
6. Air Filter
7. Ignition Key
8. Choke Control Knob
9. Throttle Control Lever
10. Power Take-off (PTO) Knob
11. Hour Meter
12. Height-of-Cut Adjustment System
13. Transport Lock Release Lever
14. Deck Lift Pedal
15. Seat Adjustment Lever
16. Seat Suspension Adjustment Dial
17. Parking Brake Lever
18. Belt Cover (2)
19. Deck Access Panel
20. Steering Lever (2)
21. Discharge Chute
22. Anti-Scalp Wheel (6)
23. Transaxle Bypass Lever (2)
24. Battery (Under Seat)
25. Fuse Box
26. Rollover Protection Structure (ROPS)
27. Seat Latch Release Lever

WARNING: AVOID INJURY. Read and understand the entire *Safety* section before proceeding.

See Figure 9 for all controls and features locations.

IGNITION KEY

See Figure 10.

Controls power to the engine. The key cannot be removed when in run position.

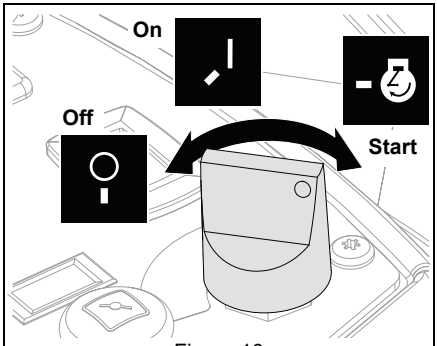

Figure 10

CHOKE CONTROL KNOB

See Figure 11.

Controls airflow to the engine.

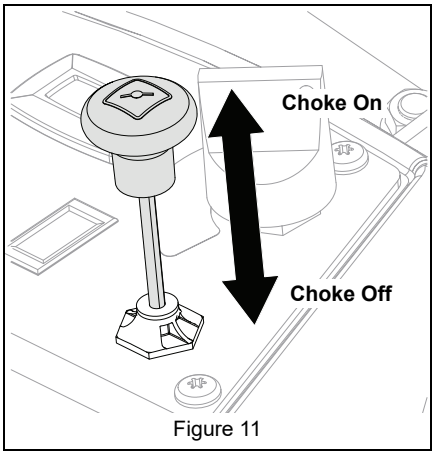

Figure 11

THROTTLE CONTROL LEVER

See Figure 12.

Controls engine speed.

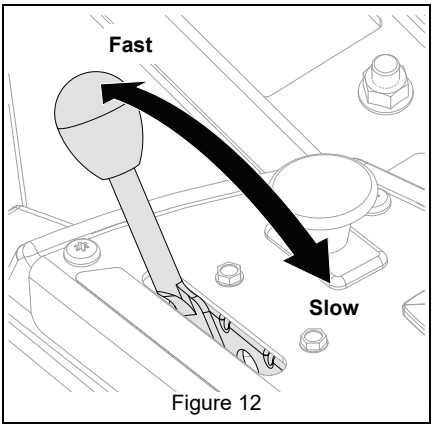

Figure 12

POWER-TAKE-OFF (PTO) KNOB

See Figure 13.

Controls power to mower blades. The engine will not start with the PTO knob in the on position.

WARNING: AVOID INJURY. Blades will not *immediately* stop after pushing PTO knob down to off position.

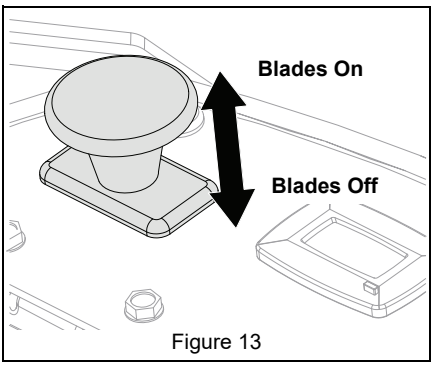

Figure 13

HOUR METER

Measures engine runtime and cannot be reset.

HEIGHT-OF-CUT ADJUSTMENT SYSTEM

Sets the height of cut.

TRANSPORT LOCK

Locks mower deck in the highest position for transporting or moving unit from one work area to another.

TRANSPORT LOCK RELEASE LEVER

See Figure 14.

Releases deck from transport lock position.

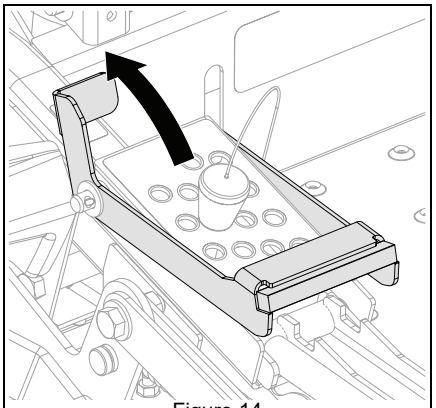

Figure 14

DECK LIFT PEDAL

Raises mower deck to change height-of-cut setting.

SEAT ADJUSTMENT LEVER

Unlocks seat to allow operator to move seat forward or backward and then lock in desired position.

PARKING BRAKE LEVER

See Figure 15.

Controls the parking brake. The engine will not start with brake in the off position.

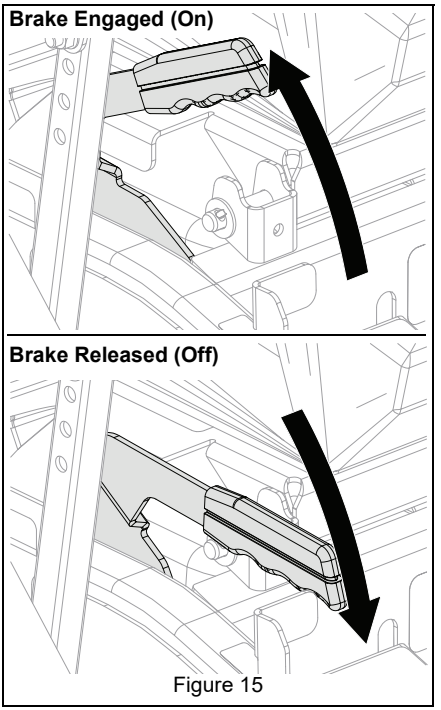

Figure 15

SAFETY INTERLOCK SYSTEM

Monitors the interaction of various unit safety features and closes an electrical circuit that allows for unit to start and operate when certain conditions are met.

STEERING LEVERS

Control the direction and speed of unit. To stop unit, return both steering levers to neutral. Steering levers are locked in neutral when parking brake is engaged.

TRANSAXLE BYPASS LEVERS

Control the transaxles so unit may be moved with the engine off.

ANTI-SCALP WHEEL

Help prevent the deck from contacting the ground and scalping the lawn when passing over a high spot.

SEAT LATCH RELEASE LEVER

See Figure 28 and 29.

Releases seat from seat panel, allowing seat to tip forward into service position.

BEFORE OPERATION

WARNING: AVOID INJURY. Read and understand the *Safety* section before proceeding.

1. Clean mower deck. See *Clean Mower Deck* on page 22.
2. Know how to stop in an emergency. See *Emergency Stopping* on page 19.
3. Check fuel level and add fuel if needed.

IMPORTANT: Use fresh unleaded fuel with an octane rating of at least 87. DO NOT use E85 blended fuels; the engine is not E20 / E30 / E85 compatible. The maximum recommended ethanol content is 10%. Gravely recommends using a quality fuel stabilizer in all fuel. See *Short-Term Storage* on page 41.

4. Check engine oil level and add oil if needed. Refer to engine manual.
5. Check hydraulic oil level and add oil if needed. See *Check Hydraulic System* on page 26.
6. Check condition of air cleaner. Refer to engine manual.
7. Check function of all controls.
8. Check function of the Safety Interlock System by performing the tests below. Contact your Gravely dealer for repair if any of the tests fail.

WARNING: AVOID INJURY. Failure of Safety Interlock System together with improper operation can result in severe personal injury.

Test	Steering Levers	PTO	Parking Brake	Result
Starting Interlock				
1	Neutral	Off	On	Engine starts.
2	Forward, Neutral, Reverse	On	On or Off	Engine does not start.
3	Forward, Neutral, Reverse	On or Off	Off	Engine does not start.
Operating Interlock (Engine On)				
4 *	Forward, Neutral, Reverse	On	On or Off	Engine shuts off.
5 *	Forward, Neutral, Reverse	On or Off	Off	Engine shuts off.
* When operator lifts off seat.				

SET CUTTING HEIGHT

See Figure 16.

1. Push deck lift pedal completely forward until transport lock engages.
2. Insert adjustment pin through desired setting in height-of-cut adjustment system.

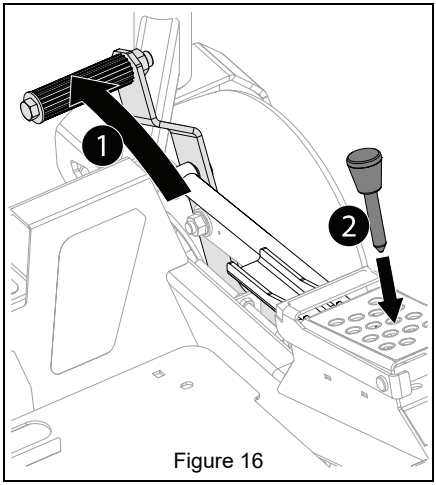

Figure 16

3. Push deck lift pedal slightly forward, release transport lock and slowly release pedal until deck rests. See Figure 17.

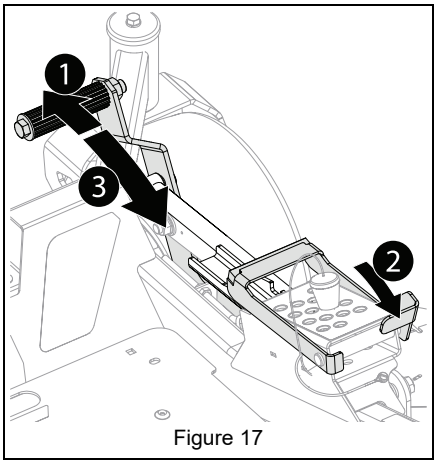

Figure 17

ADJUST SEAT

WARNING: AVOID INJURY. Make all seat adjustments with the unit stopped, parking brake engaged and engine off.

See Figure 18.

Set Seat Suspension Firmness

Rotate seat suspension adjustment dial to match the approximate weight of the operator and adjust suspension firmness.

- Rotate dial clockwise to increase firmness
- Rotate dial counterclockwise to decrease firmness.

Set Seat Position

1. Pull seat adjustment lever up to unlock seat.
2. Move seat to desired position.
3. Release seat adjustment lever to lock seat in place.

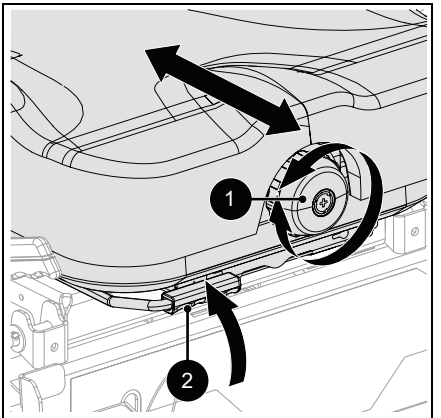

1. Seat Height Adjustment Dial
2. Seat Adjustment Lever

Figure 18

ADJUST STEERING LEVERS

Adjust Height

The steering lever height may be adjusted for operator comfort.

See Figure 19.

1. Stop engine, engage parking brake, remove key, and wait for moving parts to stop and for hot parts to cool.
2. Remove steering lever hardware and remove steering lever from lower control arm.
3. Position steering lever at desired height and align with lower control arm. Secure with original hardware.

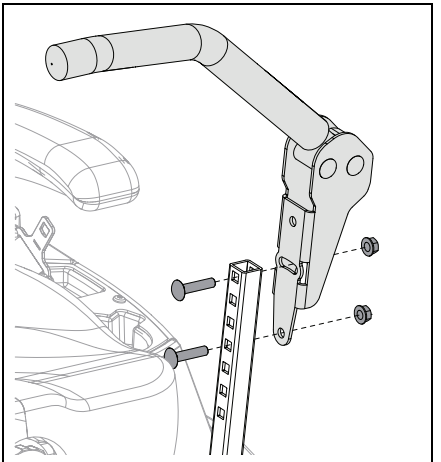
Figure 19

See Figure 20.

4. Loosen hardware retaining eccentric spacer.
5. Turn eccentric spacer so levers are at the same height and have a 1.3 cm – 2.5 cm (1/2" – 1") gap between lever ends.

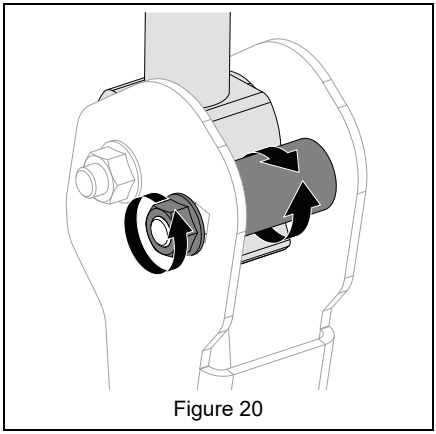

Figure 20

6. Tighten eccentric spacer hardware.

If there is more than 3.2 mm (1/8") between the horizontal alignment of the steering levers, align the levers. See *Adjust Forward Position* on page 17.

Adjust Forward Position

The steering lever forward position may be adjusted for operator comfort.

See Figure 21.

1. Engage parking brake to lock steering levers in their neutral positions.
2. Loosen mounting hardware on steering lever assemblies.
3. Place steering levers in desired position:
   - Gently push levers forward for greater distance from operator.
   - Gently pull levers back for closer distance to operator.
4. Tighten hardware.

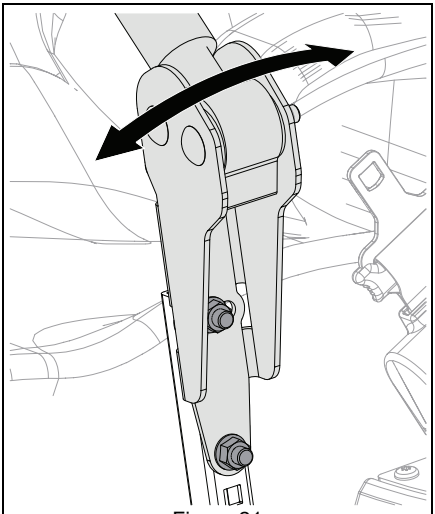

Figure 21

POSITION ROPS

IMPORTANT: Inspect ROPS and seatbelt for damage and loose or missing hardware.

Raise Center Bar

1. Remove hairpins from lock pins and remove lock pins from hinge plate. See Figure 22.

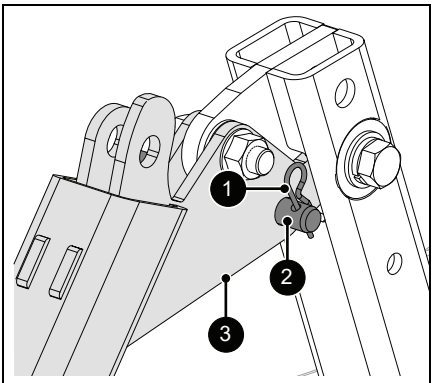

1. Hairpin
2. Lock Pin
3. Hinge Plate

Figure 22

See Figure 23 and Figure 24.

4. Raise center bar and secure with lock pins and hairpins.

WARNING: AVOID INJURY. Seatbelt MUST be worn when operating with center bar raised.

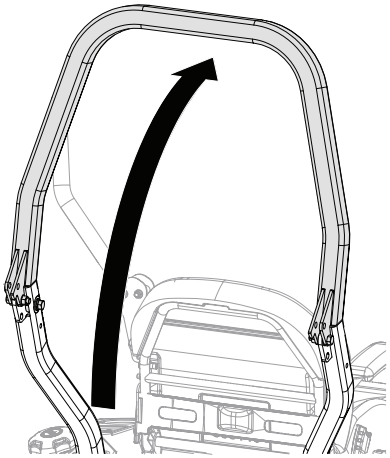

Figure 23

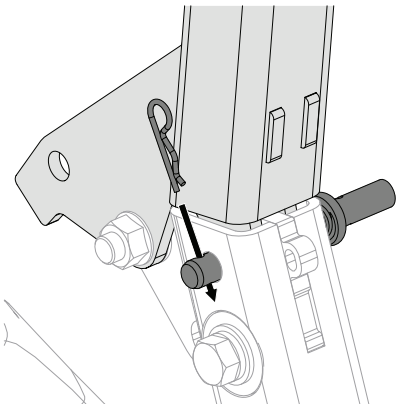

Figure 24

Lower Center Bar

See Figure 25.

WARNING: AVOID INJURY. Lower the center bar only when needed to drive under an object. There is no rollover protection with the center bar in the lowered position. DO NOT wear seatbelt when ROPS is in lowered position.

1. Remove hairpins from lock pins and remove lock pins from hinge plate.
2. Lower center bar and secure with lock pins and hairpins.

IMPORTANT: Return center bar to the raised position when clear of obstacles.

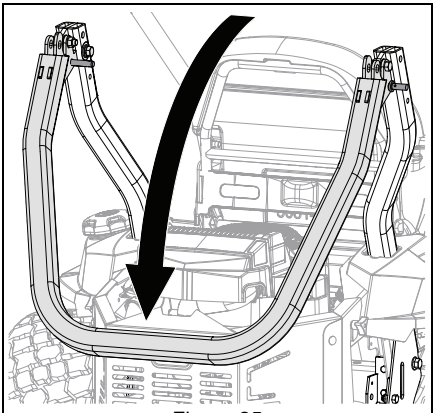

Figure 25

OPERATION

WARNING: AVOID INJURY. Read and understand the *Safety* section before proceeding.

IMPORTANT: All references to left, right, front or rear are given from the perspective of operator in operator's position, facing the direction of forward travel.

EMERGENCY STOPPING

1. Move steering levers to neutral position.
2. Engage parking brake.
3. Push PTO knob down to off position.
4. Turn ignition key to off position and remove key from ignition.

START THE ENGINE

1. Push PTO knob down to off position.
2. Move steering levers to neutral position.
3. Engage parking brake.
4. ***Cold engines only:*** Pull choke knob up to on position. DO NOT use choke on a warm engine.
5. Set throttle to slow speed.
6. Insert ignition key and turn to start position. Release key when engine starts.

IMPORTANT: Do not operate the starter for more than 10 seconds at a time. If the engine does not start, allow a 60-second cool down period between starting attempts.

7. If choke is on, wait a few seconds after engine starts and then push choke knob down to off position.

IMPORTANT: Make sure choke is completely off. Engine will not run smoothly using partial choke.

OPERATE UNIT

1. Start the engine. See *Start the Engine* on page 19.
2. Release parking brake.
3. Set throttle control lever to fast position.

IMPORTANT: Engaging the PTO knob with the throttle lever set lower than fast position can cause excessive belt wear. ALWAYS use fast position when engaging the PTO.

4. Pull PTO knob up to on position.

IMPORTANT: Never engage the PTO if the mower is plugged with grass or other material. This may cause damage to the electric clutch.

WARNING: AVOID INJURY. Move the steering levers slowly and keep the throttle at slow speed until you learn how to operate the unit.

5. Move steering levers to begin mowing.

Direction of Travel	Lever Position
Forward	Push both levers forward from neutral position. 
Reverse	Pull both levers backward from neutral position. 
Right Turn	Push left lever farther forward than the right lever. 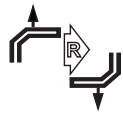
Left Turn	Push right lever farther forward than the left lever. 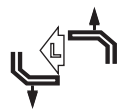
Stop	Return both levers to neutral position. 

IMPORTANT: Aggressive turning can scuff or damage lawns. Always keep both wheels rotating when making sharp turns. DO NOT make turns with inside wheel completely stopped. For minimum turning radius, slowly reverse inside wheel while moving outside wheel slowly forward.

For Best Mowing Results

- Cut grass when it is dry.
- Keep mower blades sharp.
- Keep mower deck properly leveled.
- Do not set height of cut too low. For very tall grass, mow twice.
- Do not travel too fast.
- Mow with the engine set at full throttle.
- When mulching, only remove 1/3 of grass length per cutting. Do not cut more than 2.5 cm (1") at any one time.

- Discharge clippings into areas already cut.
- Vary cutting pattern with each mowing.
- Do not allow grass or debris to collect inside of mower deck. Clean after each use.

STOP THE ENGINE

WARNING: AVOID INJURY. Wait for all moving parts to stop before leaving operator's position.

1. Move steering levers to neutral position and rotate outward.
2. Engage parking brake.
3. Push PTO knob down to off position.
4. Set throttle to slow speed.
5. Turn ignition key to off position and remove key from ignition.

MOVE UNIT MANUALLY

Bypass the transaxles to move the unit with the engine off.

IMPORTANT: There is one transaxle bypass lever on each side of unit. Ensure that both levers are fully in front or rear position.

1. Stop engine, engage parking brake, remove key, and wait for moving parts to stop and for hot parts to cool.
2. Pull both transaxle bypass levers out into bypass position. See Figure 26.

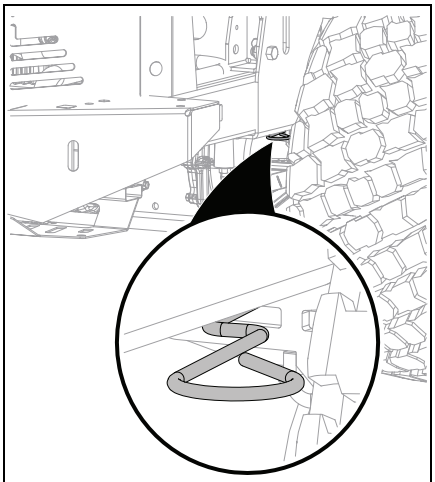

Figure 26

3. Release parking brake and push unit to desired location.
4. Engage parking brake.
5. Return transaxle bypass levers to operating position. See Figure 27.

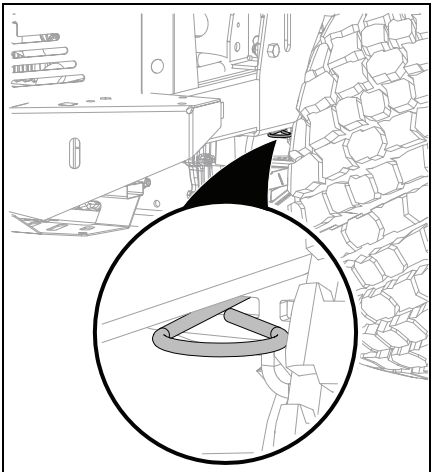

Figure 27

TRANSPORT UNIT

1. Push deck lift pedal completely forward to engage transport lock. Release pedal.
2. Move unit to transport vehicle.
3. Stop engine, engage parking brake and remove key from ignition.
4. Secure mower frame to transport vehicle.

NOTICE: NEVER secure unit to vehicle from rods or linkages that could be damaged.

RELEASE TRANSPORT LOCK

1. Push deck lift pedal forward and lift transport lock release lever.
2. Slowly return mower lift pedal to resting position.

MAINTENANCE

WARNING: AVOID INJURY. Read and understand the *Safety* section before proceeding.

Proper maintenance can prolong the life of unit. The *Maintenance Schedule* on page 22 shows the recommended service schedule.

Your Gravely dealer can provide service and adjustments to keep your unit operating at peak efficiency. Contact an authorized engine manufacturer's service center for engine service.

More frequent service may be required due to working conditions (heavy loads, high ambient temperatures, dusty conditions, or airborne debris).

See the maintenance instructions in the Engine Manual for additional information.

SERVICE POSITION

1. Park unit on a flat, level surface.
2. Stop engine, remove key and wait for all moving parts to stop and for hot parts to cool.
3. Engage parking brake.
4. Chock wheels. Strap and clamp unit onto lift, if used.
5. Disconnect spark plug cables from engine.

See Figure 28 and Figure 29.

If access under the seat is needed:

6. Rotate steering levers outward.
7. Push seat latch release lever down and rotate seat forward.

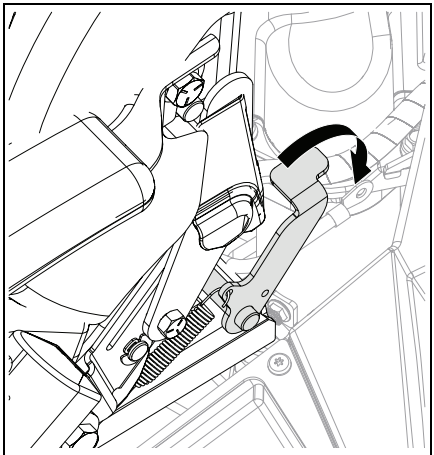

Figure 28

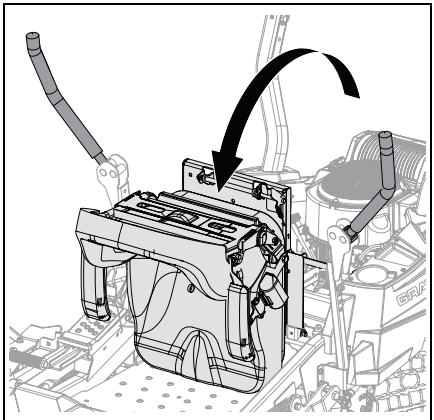

Figure 29

IMPORTANT: Reconnect spark plug wires and ensure seat is fully latched after maintenance.

MAINTENANCE SCHEDULE

Service Performed	Each Use	Every 25 hrs.	Every 50 hrs.	Every 100 hrs.	Every 400 hrs.
Clean Engine of Any Grass or Debris	•				
Clean Mower Deck of Any Grass or Debris	•				
Check Safety Interlock System	•				
Check Hydraulic System	•				
Check Parking Brake	•				
Check Engine Oil *	•				
Change Engine Oil *					
Check Air Filter*	•				
Change Air Filter *					
Check Tire Pressure	•				
Check Mower Blades	•				
Check Battery		•			
Clean Battery		•			
Check Fasteners			•		
Lubricate Unit			•		
Clean Engine Cooling System*				•	
Check Belts				•	
Change Hydraulic Oil and Filter **					•

* Refer to engine manual for instructions

** Change after first 75 hours of operation

SERVICE PARTS

See your Gravely dealer to purchase service parts for your unit.

Description	Qty.	Part No.
Transaxle Drive Belt	1	07200935
PTO Belt – 48"	1	07201004
PTO Belt – 52"	1	07201005
PTO Belt – 60"	1	07201006
Mower Blade –48"	3	00450200
Mower Blade – 52"	3	03253800
Mower Blade – 60"	3	03253900
Seat Switch	1	03654200
Hydraulic Oil – 32 oz (1 Qt.)	AR	00057100
Hydraulic Oil Filter	2	21545100
Hydro-Gear Oil Service With Pump Kit: • (5) Quarts of Transaxle Oil • (2) Oil Filters • (1) Fitting • (1) Pump	1	59127800
Fuel Filter	1	21573800
Engine Oil Filter	1	21548100
Air Filter	1	21599800
Fuel Stabilizer – 118 ml (4 oz.)	AR	04730400
Relay	1	04438400
Engine Maintenance Kit • (2) 32 oz Bottles of 10W40 Engine Oil • (1) Oil Filter • (1) Fuel Filter • (1) Air Filter • (2) Spark Plugs	1	70738300

CLEAN MOWER DECK

Clean grass and debris from mower deck before each use.

1. Stop engine, engage parking brake, remove key, and wait for moving parts to stop and for hot parts to cool.
2. Remove grass and debris from mower deck and around discharge opening.
3. Remove mower blades and remove grass and debris accumulation from inside the cutting chamber. See *Remove Blades* on page 23.

IMPORTANT: Grass accumulation and debris buildup inside the cutting chamber disrupts aerodynamics and can harbor bacteria and fungi. Clean regularly for best cut quality and to help prevent lawn disease spread.

CHECK SAFETY INTERLOCK SYSTEM

Parking Brake Interlock System

With the parking brake engaged, the steering levers must be locked in neutral.

With the parking brake disengaged, the engine must not start and the engine must shut off if the operator lifts off the seat. See *Operation* on page 19. If system does not operate correctly, see your dealer for repair. DO NOT operate until repairs are made.

CHECK PARKING BRAKE

1. Park unit on a flat, level surface, stop the engine, and engage parking brake.
2. Wait for all moving parts to stop and for hot parts to cool.
3. Bypass transaxles. See *Move Unit Manually* on page 20.
4. Push unit forward.
   - If unit does not move forward, no further action is needed.
   - If unit easily moves forward, repair or adjustment is required. See *Adjust Parking Brake* on page 30.
5. Return transaxle bypass levers to operating position. See *Move Unit Manually* on page 20.

CHECK ENGINE OIL

NOTICE: Engine oil level must be maintained at correct level or engine damage may occur. Refer to engine manual.

CHECK TIRE PRESSURE

See *Specifications* on page 43 for recommended tire pressure.

WARNING: AVOID INJURY. Explosive separation of tire and rim parts is possible.

- DO NOT inflate tires above the recommended pressure.
- DO NOT inflate tires with a compressor; use a hand pump.
- DO NOT stand in front of tire assembly when inflating. Use a clip-on chuck and extension hose long enough to allow you to stand to one side.
- DO NOT mount a tire without proper equipment and experience.

CHECK FASTENERS

Check for loose or missing hardware.

LUBRICATE UNIT

1. Apply oil to all pivot points and pin connections.

CHECK MOWER BLADES

Check blades for wear and damage. Replace or sharpen as needed.

CAUTION: AVOID INJURY. Use sturdy gloves or padding to protect hands when working with mower blades.

Rotation of one blade rotates the other blades.

Remove Blades

1. Stop engine, engage parking brake, remove key, and wait for moving parts to stop and for hot parts to cool.
2. Disconnect spark plug wires.
3. Remove hardware securing blades to spindles and remove blades. Retain all hardware for reinstallation. See Figure 30.

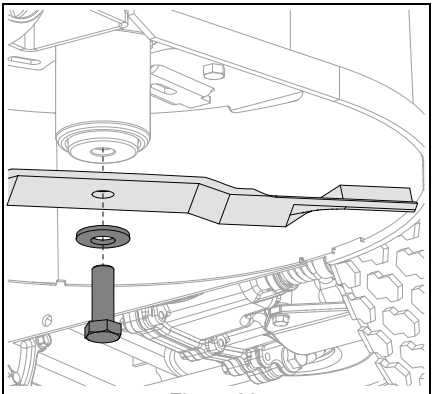

Figure 30

Sharpen Blades

CAUTION: DO NOT sharpen blades while attached to unit.

1. Remove blades. Discard blades if:
   - More than 1.3 cm (1/2") of metal is removed.
   - Air lifts are eroded.
   - Blades are bent or broken.
2. File or grind an equal amount of material from each cutting edge of the blade until sharp. DO NOT change angle of cutting edge or round the corner of the blade. See Figure 31.

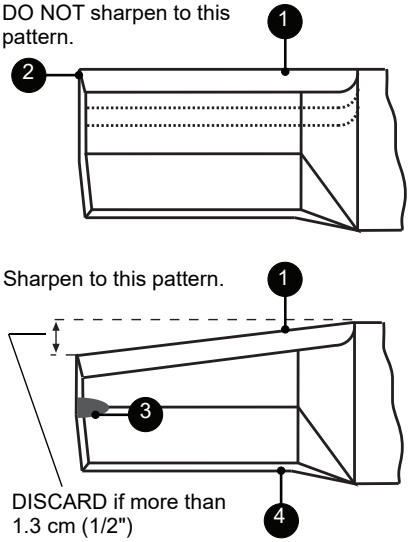

1. Cutting Edge
2. Square Corner
3. Air Lift Erosion
4. Air Lift

Figure 31

CAUTION: Unbalanced blades cause excessive vibration and eventual damage to unit. Balance blades before reinstalling on unit.

NEVER weld or straighten blades.

3. Check blade balance by sliding blade on an unthreaded bolt. If blade does not remain horizontal, sharpen the heavy end until blade is balanced.

Install Blades

See Figure 30.

1. Reinstall blades and secure with original hardware. Torque to 156 – 217 N•m (115 – 160 lb-ft).

IMPORTANT: Reinstall Belleville washer with concave (cupped) side against blade.

2. Reconnect spark plug wires.

BATTERY SERVICE

WARNING: Battery posts, terminals and related accessories contain lead and lead compounds, chemicals known to the State of California to cause cancer and reproductive harm. Wash hands after handling.

Remove Battery

1. Place mower deck in lowest position.
2. Place unit in service position. See *Service Position* on page 21.
3. Loosen hex nut securing left battery retainer to frame. See Figure 32.

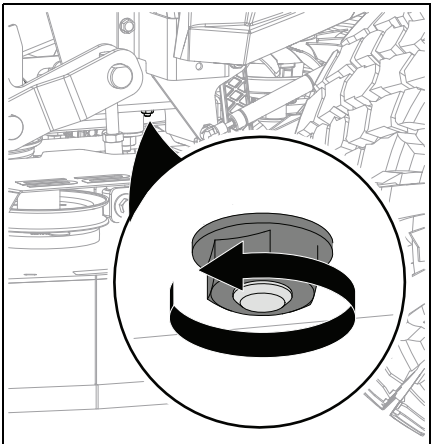

Figure 32

See Figure 33.

4. Remove battery strap from battery retainers.
5. Remove battery.

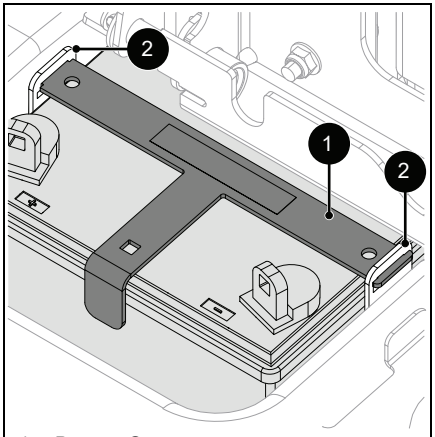

1. Battery Strap
2. Battery Retainer

Figure 33

Clean Battery

1. Clean terminals and battery cable ends with a wire brush.
2. Coat terminals with dielectric grease or petroleum jelly.

Install Battery

Unit accommodates batteries of two different sizes: a U1 battery and a standard-size, 12-volt absorbent glass mat (AGM) lawnmower battery.

CAUTION: DO NOT allow direct metal contact across battery posts.

1. Install battery between battery retainers.
2. Insert battery strap ends into retainer slots. See Figure 33.

IMPORTANT: Battery retainers feature two slots to accommodate batteries of two different sizes. Insert strap ends into retainer slots nearest top of battery.

3. Tighten nut securing left battery retainer to frame. See Figure 32.
4. Reconnect the battery cables to their terminals with their original hardware.

IMPORTANT: Reconnect the positive battery cable first, then the negative battery cable.

5. Return seat to operating position.

Charge Battery

Check battery with a voltmeter. If battery is less than 11 volts, charge battery.

NOTICE: DO NOT fast charge. Charging at a higher rate damages or destroys the battery. ONLY use an automatic charger designed for use with your battery.

NOTICE: Always follow information provided on battery by battery manufacturer. Contact battery manufacturer for detailed information about charging.

1. Remove battery from unit. See *Battery Service* on page 24.
2. Place battery on bench or other well-ventilated area.
3. Connect positive lead of charger to positive battery terminal.
4. Connect negative lead of charger to negative battery terminal.
5. Charge battery following battery manufacturer's instructions.
6. Reinstall battery. See *Install Battery* on page 25.

Jump Starting

Gravely does not recommend jump starting your unit. Jump-starting can damage engine and system components. Refer to engine manual for details.

CHECK MOWER BELTS

Check belts for wear. Contact your Ariens dealer for replacements if you see:

- Cracks in the belt.
- Frayed edges or disconnected belt threads.
- Shiny or glazed areas.

CAUTION: Keep body parts away from idler when releasing idler spring tension.

CHECK HYDRAULIC SYSTEM

Check Hydraulic Oil Level

1. Place unit in service position. See *Service Position* on page 21.
2. Remove the top port plug. See Figure 34.

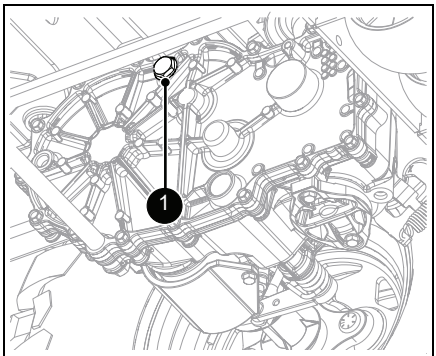

1. Top Port Plug

Figure 34

3. Check the hydraulic oil level. Oil should reach the bottom of the top port.
4. Add hydraulic oil, if needed.
5. Reinstall the top port plug. Torque to 13.6 N•m (120 lb-in).

Change Hydraulic Oil and Filter

IMPORTANT: Gravely recommends ordering the Hydro-Gear Oil Service With Pump Kit (Gravely part number 59127800) for easier transaxle service. Hydraulic oil and filters are also available separately. See *Service Parts* on page 22.

NOTICE: Change hydraulic fluid and filter after the first 75 hours of operation and then every 400 hours. Use 15W-50 Full-Synthetic Hydraulic Fluid (Gravely part number 00057100) or equivalent.

1. Operate unit for a few minutes to warm hydraulic oil.
2. Stop engine, remove key and wait for all moving parts to stop and for hot parts to cool.

See Figure 35.

3. Remove filter guard screws and filter guard. Retain for reinstallation.
4. Position container under oil filter to catch used oil.
5. Remove oil filter from transaxle and allow transaxle to drain completely.

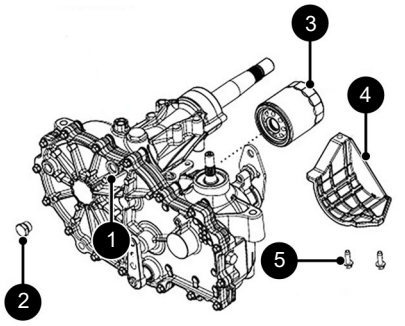

1. Top Port
2. Top Port Plug
3. Oil Filter
4. Filter Guard
5. Filter Guard Screws

Figure 35

6. Wipe filter-mounting surface clean.
7. Lubricate rubber gasket on new oil filter with clean hydraulic oil.
8. Spin filter onto filter housing until it makes contact, then turn filter 3/4 to one full turn to tighten.
9. Reinstall filter guard using original screws and torque to 7.3 N•m (65 lb-in). DO NOT overtighten.
10. Remove the top port plug.

IMPORTANT: Steps 11 – 18 include components from Hydro-Gear Oil Service Kit With Pump (Gravely part number 59127800).

11. Install oil service fitting in the top port.
12. Insert pump extension tube onto the plastic hand pump.
13. Insert pump with extension tube into a quart of hydraulic oil. Thread the pump into the bottle.
14. Connect pump hose to the oil service fitting.
15. Pump hydraulic oil into the transaxle.
16. When bottle is empty, remove the pump from the bottle and repeat steps 13 and 15. Continue until oil flows from the exit port of the oil service fitting.
17. Remove pump hose from oil service fitting.
18. Remove oil service fitting from top port, then reinstall the top port plug. Torque to 13.6 N•m (120 lb-in).
19. Repeat process for remaining transaxle.
20. Purge hydraulic system. See *Purge Hydraulic System* on page 27.

Purge Hydraulic System

WARNING: AVOID INJURY. This adjustment requires operating the engine. Use extreme care to avoid contact with moving parts and hot surfaces. Be sure rear of unit is well supported and secure before starting engine.

1. With the unit up to and facing a wall, jack up the unit so that both drive wheels are off the ground.
2. Release parking brake.
3. Support unit so drive wheels are off the ground.
4. Bypass transaxles. See *Move Unit Manually* on page 20.
5. Start the engine and slowly move the steering levers in forward and reverse five or six times.
6. Stop the engine and return transaxle bypass levers to operating position. See *Move Unit Manually* on page 20.
7. Start the engine and slowly move the steering levers in forward and reverse five or six times.
8. Stop the engine, lower unit to the ground and check oil level. Add oil if needed.
9. Repeat steps 1 – 8 until the transaxles operate smoothly in forward and reverse at normal speed without excessive noise.

SERVICE & ADJUSTMENTS

WARNING: AVOID INJURY. Read and understand the *Safety* section before proceeding.

ELECTRICAL SERVICE

See Figure 36 & Figure 37.

Replace Fuse

NOTICE: To avoid damaging the circuit, replace fuses with fuses of the same amperage rating. Determine the cause of electrical failure and repair before replacing failed electrical components.

1. Place unit in service position. See *Service Position* on page 21.
2. Remove fuse box cover.
3. Remove defective fuse.
4. Determine cause of fuse failure and repair condition.
5. Install new fuse.
6. Replace fuse box cover. Ensure cover snaps tightly in position.

Replace Relay

NOTICE: Relays are interchangeable. Use only quality replacement parts. See *Service Parts* on page 22.

1. Place unit in service position. See *Service Position* on page 21.
2. Remove fuse box cover.
3. Remove defective relay.
4. Determine cause of relay failure and repair condition.
5. Install new relay.
6. Replace fuse box cover. Ensure cover snaps tightly in position.

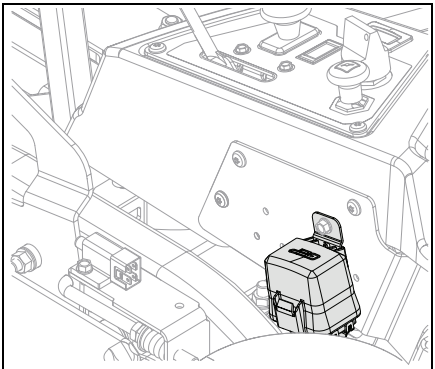

Figure 36

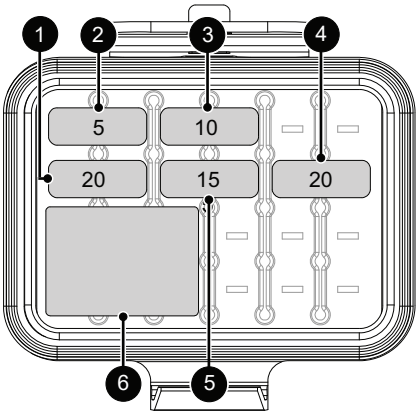

1. Main Fuse – 20A
2. Controls Fuse – 5A
3. PTO Fuse – 10A
4. Charge Fuse – 20A
5. Auxiliary Fuse – 15A
6. Run Relay

Figure 37

ADJUST UNIT TO DRIVE STRAIGHT

Adjust Tire Pressure

1. Stop engine, engage parking brake, remove key, and wait for moving parts to stop and for hot parts to cool.
2. Check tire pressures and adjust so both tire pressures are equal, if necessary. DO NOT exceed maximum tire pressure listed on tire sidewalls. See *Check Tire Pressure* on page 23.
3. Check tracking:
   - If unit drives in a straight line, no further adjustment is needed.
   - If unit does not drive in a straight line, adjust limiter bolts. See *Adjust Limiter Bolts* on page 28.

Adjust Limiter Bolts

See Figure 38.

Limiter bolts can be adjusted to increase or decrease each steering lever's maximum range of forward travel, and the maximum forward drive speed of each wheel. To adjust:

1. Loosen jam nut.
   - Turn limiter bolt counterclockwise to increase maximum drive wheel speed on that side.
   - Turn limiter bolt clockwise to reduce maximum drive wheel speed on that side.

NOTICE: The limiter bolt prevents excessive and damaging input to the transaxles. DO NOT adjust limiter bolt too much that there's no limitation to the steering lever travel range; steering lever tab MUST contact the limiter bolt when lever is pushed completely forward.

2. Tighten jam nut.

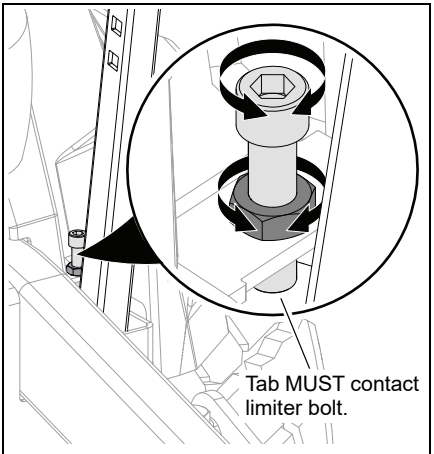

Figure 38

3. Adjust steering lever forward positions to compensate for limiter bolt adjustments. See *Adjust Forward Position* on page 17.

ADJUST TRANSAXLES

Check For Excessive Creep

WARNING: AVOID INJURY. This adjustment requires operating the engine. Use extreme care to avoid contact with moving parts and hot surfaces. Be sure rear of unit is well supported and secure before starting engine.

1. Operate unit for a minimum of 5 minutes to warm hydraulic system.
2. Stop engine and engage parking brake.
3. Chock front wheels and support unit so both drive wheels are off the ground.
4. Remove drive wheels.

IMPORTANT: Engine will stop if there's no operator in the seat when the parking brake is released in the next step. Enlist help from a qualified adult to complete steps 5 – 7.

5. ***Operator in seat:*** Start engine, move throttle lever to fast position and release parking brake.
6. ***Operator in seat:*** Move steering levers forward and backward 5 or 6 times and then return levers to neutral position.
7. ***Technician:*** Check hubs for rotation.
   - If there's no rotation, stop the engine, reinstall wheels, and lower unit to ground.
   - If there is rotation, adjust neutral. See *Adjust Hydraulic Neutral* on page 29, then *Adjust Mechanical Neutral* on page 30.

IMPORTANT: Torque wheel lug nuts to 81.3 – 122.0 N•m (60 – 90 lb-ft).

Adjust Hydraulic Neutral

WARNING: AVOID INJURY. This adjustment requires operating the engine. Use extreme care to avoid contact with moving parts and hot surfaces. Be sure rear of unit is well supported and secure before starting engine.

IMPORTANT: If wheel hub rotates when checking for excessive creep, adjust hydraulic neutral first, then adjust mechanical neutral.

IMPORTANT: Complete adjustment on both transaxles.

1. Stop engine, engage parking brake, remove key, and wait for moving parts to stop and for hot parts to cool.
2. Chock front wheels.
3. Support unit so both drive wheels are off the ground.
4. Remove drive wheels.
5. Loosen the neutral set screw on the transaxles. See Figure 39.

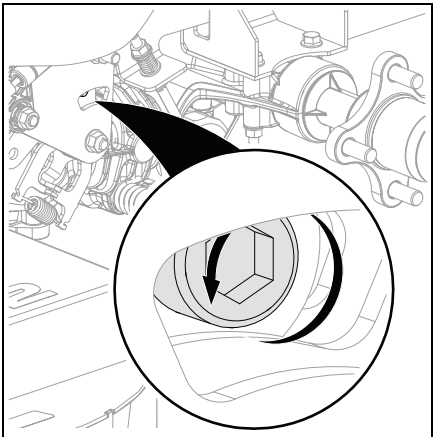

Figure 39

IMPORTANT: Engine will stop if there's no operator in the seat when the parking brake is released in the next step. Enlist help from a qualified adult to complete steps 6 – 10.

6. ***Operator in seat:*** Start engine, move throttle lever to fast position and release parking brake.
7. ***Technician:*** Slowly turn transaxle control arm in the opposite direction of hub rotation until hub stops. See Figure 40.

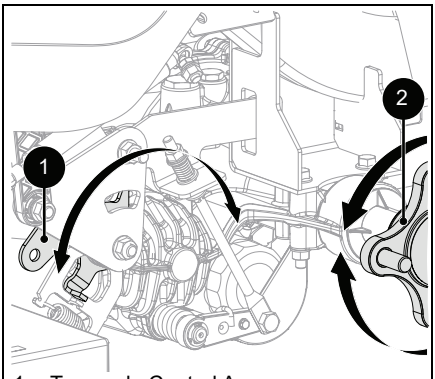

1. Transaxle Control Arm
2. Wheel Hub

Figure 40

8. ***Technician:*** Hold the transaxle control arm in position and tighten the neutral set screw.
9. ***Operator in seat:*** Move steering levers forward and backward 5 or 6 times and then return levers to their neutral positions.

10. ***Technician:*** Check wheel hubs for rotation.
    - If there's no rotation, stop the engine, and reinstall wheels.
    - If there is rotation, repeat steps 5 – 10.

IMPORTANT: Torque wheel lug nuts to 81.3 – 122.0 N•m (60 – 90 lb-ft).

11. Adjust mechanical neutral. See *Adjust Mechanical Neutral* on page 30.

Adjust Mechanical Neutral

WARNING: AVOID INJURY. This adjustment requires operating the engine. Use extreme care to avoid contact with moving parts and hot surfaces. Be sure rear of unit is well supported and secure before starting engine.

IMPORTANT: Complete adjustment on both transaxles.

1. Adjust hydraulic neutral if procedure not already completed. See *Adjust Hydraulic Neutral* on page 29.1
2. Stop engine, engage parking brake, remove key, and wait for moving parts to stop and for hot parts to cool.
3. Chock front wheels.
4. Support unit so both drive wheels are off the ground.
5. Remove drive wheels.
6. Remove hardware securing brake linkages to transaxle brake arms. See Figure 41.

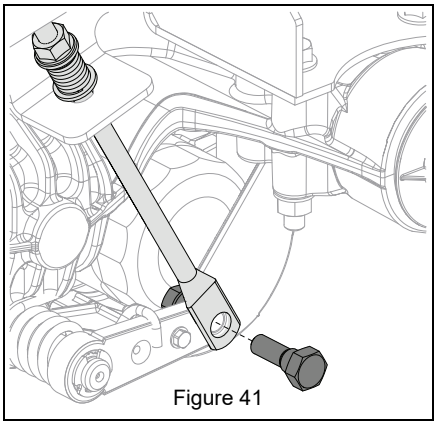

Figure 41

7. Start the engine and move the throttle control lever to the fast position.
    - If wheel hub rotates, continue to step 8.
    - If there's no rotation, no adjustment is needed. Stop the engine and reinstall wheels.

IMPORTANT: Torque wheel lug nuts to 81.3 – 122.0 N•m (60 – 90 lb-ft).

See Figure 42.

8. Loosen, but do NOT remove the hardware retaining the brake arm to the frame.

IMPORTANT: Location where hardware is secured is slotted, allowing brake arm to be adjusted forward or backward.

9. Move the brake arm slightly forward or backward until the hub stops rotating.

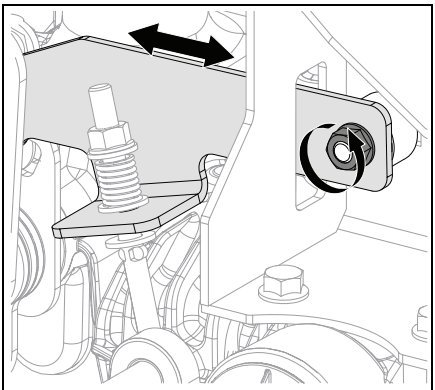

Figure 42

10. Tighten the hardware retaining the brake arm to the frame when adjustment is complete.
11. Stop the engine and reinstall wheels.

IMPORTANT: Torque wheel lug nuts to 81.3 – 122.0 N•m (60 – 90 lb-ft).

12. Secure brake linkages to the transaxle brake arms with their original hardware. See Figure 41.

ADJUST PARKING BRAKE

1. Place unit in service position. Rotate steering levers outward and rotate seat forward to gain access under the seat. See *Service Position* on page 21.

See Figure 43.

2. Loosen jam nuts on cable adjustment barrel.
3. Adjust cable tension:
    - To increase parking brake lever response, loosen the upper jam nut and tighten the lower jam nut until both jam nuts are tight against cable bracket.

- To decrease parking brake lever response, loosen the lower jam nut and tighten the upper jam nut until both jam nuts are tight against cable bracket.

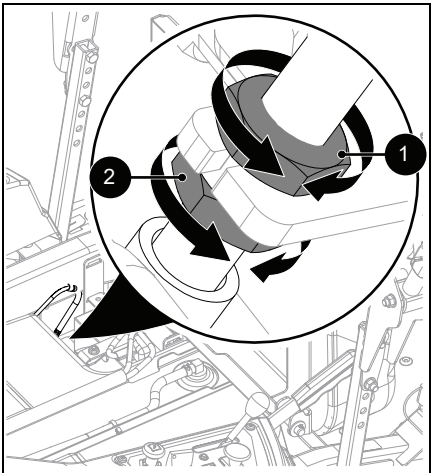

1. Upper Jam Nut
2. Lower Jam Nut

Figure 43

IMPORTANT: Parking brake cable should have a slight amount of slack when brake is engaged. See Figure 44.

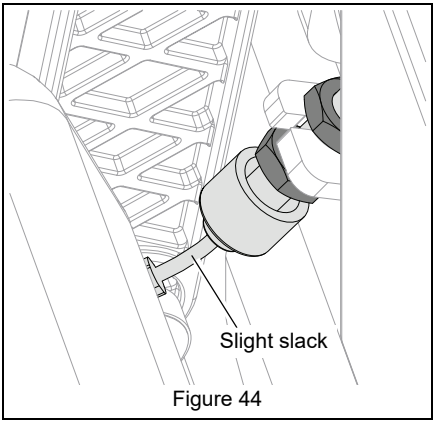

Figure 44

4. Check parking brake and readjust if necessary. See *Check Parking Brake* on page 23.

REPLACE MOWER BELTS

CAUTION: Damage or worn belts may result in injury and / or damage to the unit. Check belts for excessive wear or cracks often.

Remove PTO Belt

1. Stop engine, engage parking brake, remove key, and wait for moving parts to stop and for hot parts to cool.
2. Position mower deck at lowest cutting height.

See Figure 45.

3. Rotate deck access panel upward.
4. Remove belt covers.

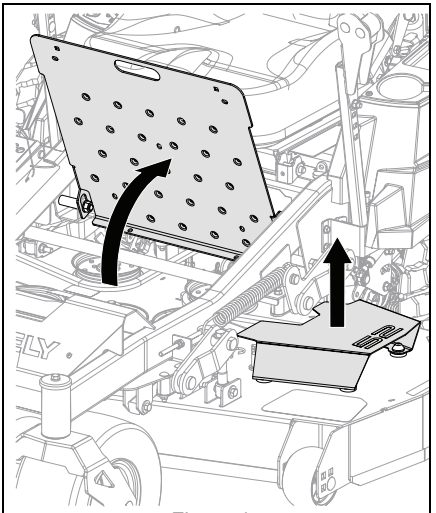

Figure 45

CAUTION: Use care when releasing idler spring tension. Keep body parts away from idlers when performing this operation.

5. Slowly remove spring hook from anchor bolt to release tension from belt idler. See Figure 46.

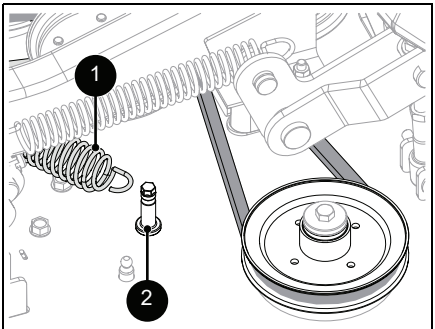

1. Spring
2. Anchor Bolt

Figure 46

6. Remove belt retainer from idler arm. See Figure 47.

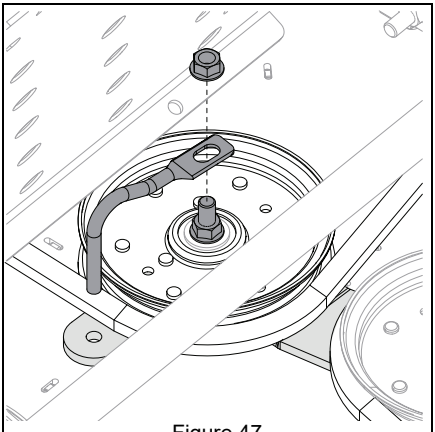

Figure 47

7. Remove PTO belt.

Install PTO Belt

1. Install PTO belt around clutch sheave at rear of unit.

See Figure 48.

2. Install PTO belt around spindle pulleys and idler pulleys.

IMPORTANT: PTO belt is a V-belt. Install belt with narrow edge around spindle pulleys and with wide edge against idler pulleys.

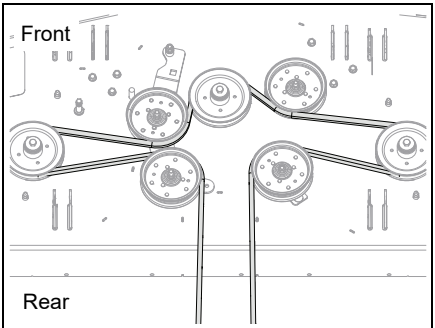

Figure 48

3. Reinstall belt retainer to idler arm. See Figure 47.
4. Reinstall idler spring hook around anchor bolt to apply tension to belt. See Figure 49.

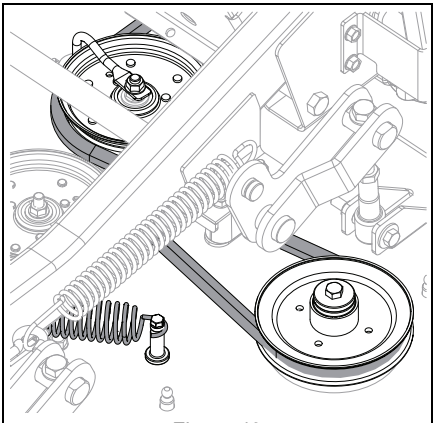

Figure 49

5. Reinstall belt covers.

IMPORTANT: Ensure belt is without twists, has tension, and is aligned in all pulleys.

REPLACE TRANSAXLE DRIVE BELT

Remove Transaxle Drive Belt

1. Stop engine, engage parking brake, remove key, and wait for moving parts to stop and for hot parts to cool.
2. Remove PTO belt from clutch. See *Remove PTO Belt* on page 31.

CAUTION: Use care when releasing idler spring tension. Keep body parts away from idlers when performing this operation.

See Figure 50 & Figure 51.

3. Slowly remove spring hook located under the right side of the frame from anchor bolt to release transaxle idler tension.

TIP: Idler spring is under heavy tension. Place a strong rope around the spring hook to gain leverage and ease removal of the spring hook from its anchor bolt.

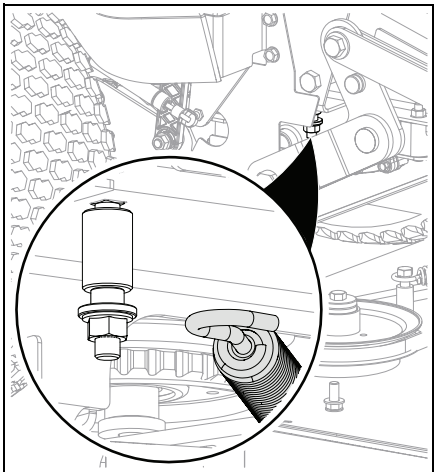

Figure 50

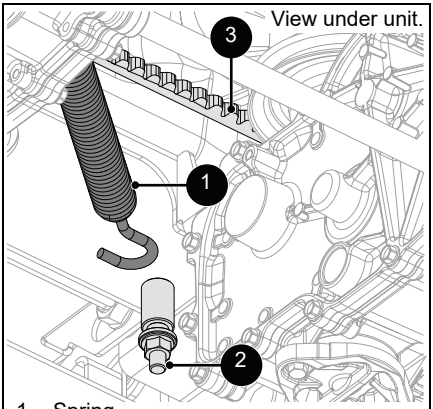

1. Spring
2. Anchor Bolt
3. Transaxle Drive Belt

Figure 51

See Figure 52.

4. Remove hardware securing clutch stop bracket to frame and remove bracket.
5. Disconnect clutch wire from clutch.

NOTICE: DO NOT cut cable tie.

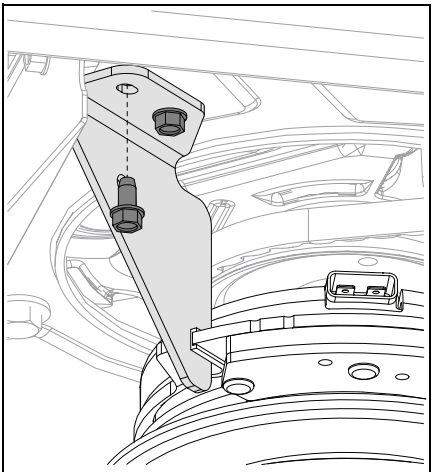

Figure 52

6. Remove transaxle drive belt.

Install Transaxle Drive Belt

See Figure 53 & Figure 54.

1. Install transaxle drive belt around engine and transaxle pulleys.
2. Align belt with idler pulley.

IMPORTANT: Transaxle drive belt is cogged. Install belt with toothed-edge around engine and transaxle pulleys and with smooth edge against idler pulley.

3. Reinstall idler spring hook onto anchor bolt to add belt tension.

IMPORTANT: Ensure belt is without twists, has tension, and is aligned in all pulleys.

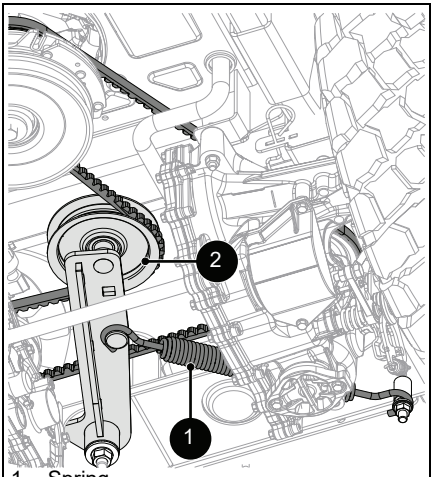

1. Spring
2. Idler Pulley

Figure 53

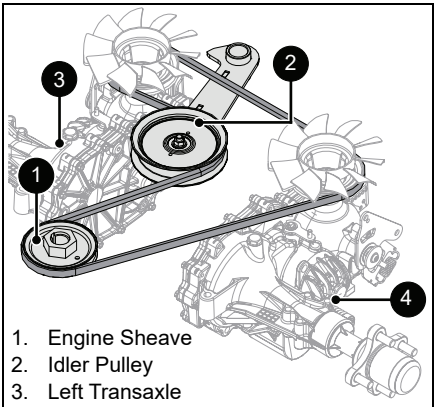

1. Engine Sheave
2. Idler Pulley
3. Left Transaxle
4. Right Transaxle

Figure 54

4. Reinstall clutch stop bracket and secure with original hardware. See Figure 52.
5. Reconnect clutch wire to clutch.
6. Reinstall PTO belt around clutch. See *Install PTO Belt* on page 32.

ADJUST ANTI-SCALP WHEELS

See Figure 55.

The anti-scalp wheels are set at the factory for typical mowing height, but can be adjusted for high or low cutting conditions. Make sure all wheels are set to the same height.

1. Stop engine, engage parking brake, remove key, and wait for moving parts to stop and for hot parts to cool.
2. Remove hardware securing anti-scalp wheels to deck and remove wheels.
3. Position wheels as necessary:
   - For a very high cutting height, set the anti-scalp wheels in the lowest position on the bracket.
   - For a very low cutting height, set the anti-scalp wheels in the highest position on the bracket.
4. Secure with original hardware.

IMPORTANT: All anti-scalp wheels MUST be set to the same height.

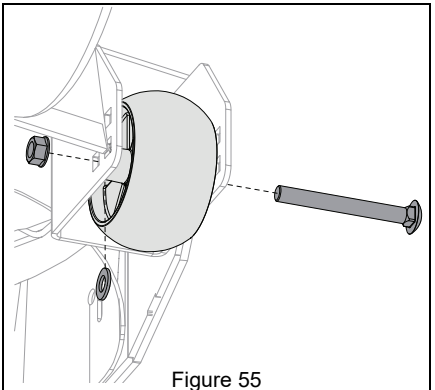

Figure 55

ADJUST DECK LIFT-ASSIST

The deck-lift assist tension may be adjusted to modify deck lift assist and deck stability. Increased spring tension leads to easier deck lifting, but also decreases deck stability.

IMPORTANT: Spring tension MUST be equal on both sides of unit; adjust on both sides.

1. Stop engine, engage parking brake, remove key, and wait for moving parts to stop and for hot parts to cool.

2. Place deck in its lowest cutting height setting.

See Figure 56.

3. Loosen rear jam nuts on anchor bolts.
4. Adjust spring tension:
   - Tighten front jam nuts to increase lift assist and decrease deck stability.
   - Loosen front jam nuts to decrease lift assist and increase deck stability.

IMPORTANT: Excessive spring tension increases the potential for deck to lift and bounce over rough terrain and affect cut quality.

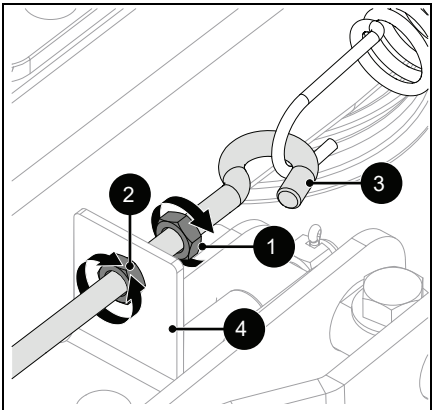

1. Rear Jam Nut
2. Front Jam Nut
3. Anchor Bolt
4. Mounting Bracket

Figure 56

5. Tighten rear jam nuts.

See Figure 57.

6. Check adjustment:
   a. Measure the distances between the outer edge of each anchor bolt and the face of each rear jam nut. Measurements must be 7.6 – 10.2 cm. (3 – 4") **and within 1.3 cm. (0.5") of each other.**
   b. Readjust as necessary.

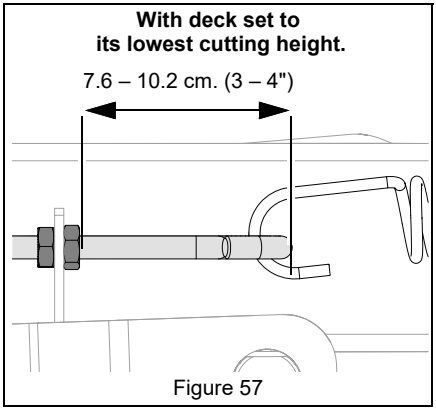

Figure 57

7. Tighten jam nuts against adjustment brackets.

REMOVE AND INSTALL MOWER DECK

Remove Deck

1. Stop engine, engage parking brake, remove key, and wait for moving parts to stop and for hot parts to cool.
2. Remove PTO belt from clutch. See *Remove PTO Belt* on page 31.
3. Push deck lift pedal completely forward to engage transport lock. See *Transport Lock* on page 14.

WARNING: AVOID INJURY! Mower lift arms and lift pedal could cause severe injury if the lift-assist springs are not disconnected before the lift links.

WARNING: AVOID INJURY! Springs store energy. Keep body parts well away from pinch points when removing the deck.

See Figure 58.

4. Loosen front jam nuts on deck lift-assist spring anchor bolts to relieve spring tension.
5. Remove lift-assist springs from anchor bolts.

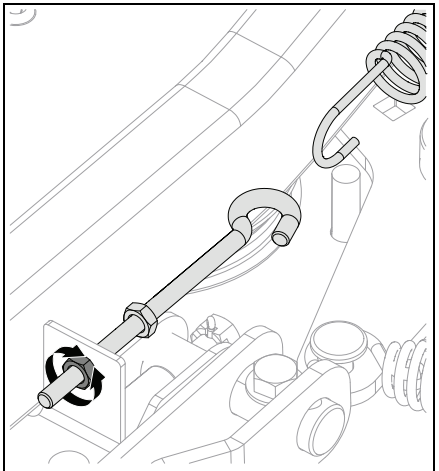

Figure 58

6. Position supports such as blocks or jack stands under each side of the deck.
7. Release transport lock and slowly lower deck until it rests on supports.
8. Remove hardware retaining drag links to frame. See Figure 59.

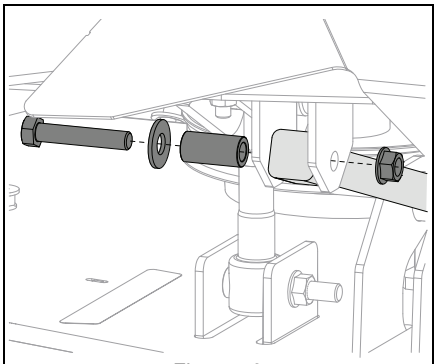

Figure 59

9. Remove hardware retaining deck-lift links to mower deck. See Figure 60.

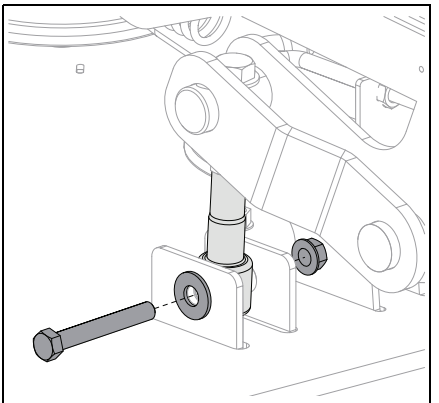

Figure 60

10. Remove deck from under unit.

Install Deck

1. Position deck under unit.

See Figure 61.

2. Secure drag links to frame with original hardware.
3. Secure deck-lift links to mower deck with original hardware.

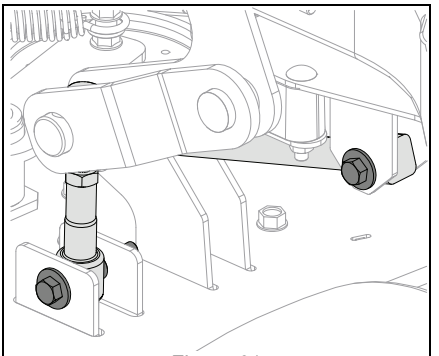

Figure 61

4. Raise deck to transport position and reconnect lift-assist springs. See Figure 62.

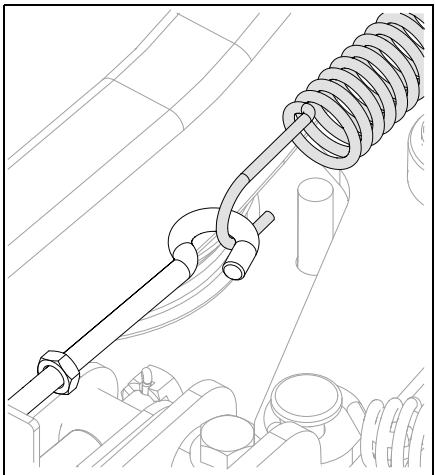

Figure 62

5. Reinstall PTO belt around clutch. See *Install PTO Belt* on page 32.
6. Adjust deck-lift assist. See *Adjust Deck Lift-Assist* on page 34.
7. Level and pitch mower deck. See *Level & Pitch Mower Deck* on page 37.

LEVEL & PITCH MOWER DECK

IMPORTANT: Park unit on a flat, level surface and ensure left and right tire pressures are equal before starting.

Check Deck Level and Pitch

1. Stop engine, engage parking brake, remove key, and wait for moving parts to stop and for hot parts to cool.
2. Disconnect spark plug wires.
3. Raise deck to 3 1/2" cutting height.

See Figure 63.

4. Position mower blades so ends point left to right across the width of the deck.
5. Measure the distances between:
   - The surface on which you're working and the outer tip of the left blade.
   - The surface on which you're working and the outer tip of the right blade.

IMPORTANT: Distances should be within 4.7 mm (3/16").

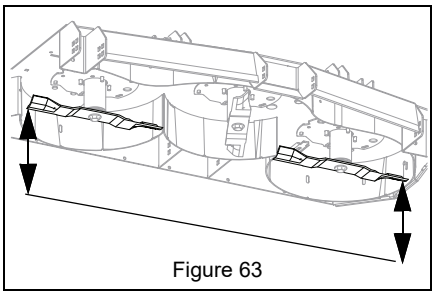

Figure 63

See Figure 64.

6. Position mower blades so ends point front to back.
7. Measure the distances between:
   - The surface on which you're working and the front tip of the center blade.
   - The surface on which you're working and the rear tips of the outer blades.

IMPORTANT: The distance between the front blade tip and the surface on which you're working should reflect your cutting height setting, and the distance between the rear blade tips and the surface on which you're working should be **0 – 3.2 mm (0 – 1/8") higher than the front blade tip.**

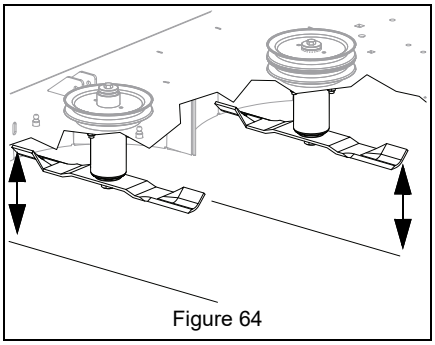

Figure 64

If measurements are out of range, adjust level and pitch. See *Adjust Deck Level & Pitch* on page 38.

Adjust Deck Level & Pitch

Level and pitch the mower deck using the height adjusters on each deck lift bracket.

TIP: Place supports under the mower deck's **rear edge** to support the deck and ease adjustment. DO NOT position supports under the reinforced leading edge at the front of the deck.

1. Stop engine, engage parking brake, remove key, and wait for moving parts to stop and for hot parts to cool.
2. Disconnect spark plug wires.

See Figure 65.

3. Loosen the jam nut on each adjustment bolt.
4. Raise and lower the deck at each adjustment point by turning adjustment bolts.
   - Turn bolts clockwise to raise.
   - Turn bolts counterclockwise to lower.

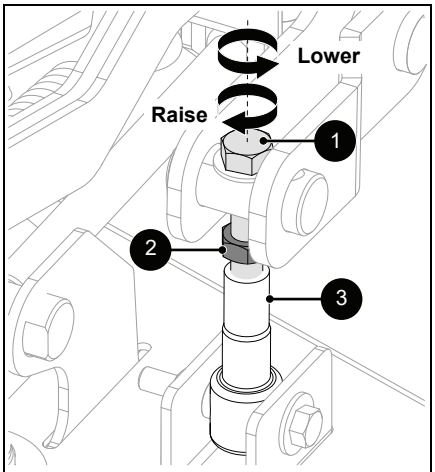

1. Adjustment Bolt
2. Jam Nut
3. Deck-Lift Link

Figure 65

5. Take measurements to verify level and pitch and continue adjustments as necessary. See *Check Deck Level and Pitch* on page 37.
6. Tighten jam nuts against deck-lift links when adjustment is complete.

TROUBLESHOOTING

Problem	Probable Cause	Correction
Engine does not start.	Safety Interlock System is not engaged or is faulty.	See *Check Safety Interlock System* on page 22.
	Fuel tank is empty.	Fill fuel tank. See *Before Operation* on page 15.
	Fuel supply is contaminated.	Replace with clean fuel.
	Battery is discharged.	Charge battery. See *Charge Battery* on page 25.
	Connection between battery and battery cables is poor.	Tighten and/or clean battery and battery cables. See *Clean Battery* on page 25.
	Spark plug wire(s) are loose or spark plug(s) are faulty.	Connect spark plug wire(s) or replace spark plug(s). Refer to engine manual.
	Electrical system is faulty.	Contact your Gravely dealer.
	Engine is faulty.	Contact your Gravely dealer.
Engine runs rough.	Choke is engaged.	Disengage choke.
	Air filter is plugged.	Clean or replace air filter. Refer to engine manual.
	Engine is faulty.	Contact your Gravely dealer.
Engine overheats.	Engine oil level is low.	Add engine oil. Refer to engine manual.
	Cooling fins are plugged.	Clean debris from engine cooling fins. Refer to engine manual.
	Engine is faulty.	Contact your Gravely dealer.
Unit does not drive.	The transaxles are bypassed.	Push transaxle bypass levers in to engage transaxles / hydrostatic drive. See *Move Unit Manually* on page 20.
	Transaxle drive belt is faulty.	Replace belt. See *Replace Transaxle Drive Belt* on page 33.
	Transaxles are faulty.	Contact your Gravely dealer.
PTO malfunctions.	Operator presence switch is not engaged.	Activate switch by sitting on operator seat.
	Operator presence switch is faulty.	Contact your Gravely dealer.
	PTO belt is faulty.	Replace belt. See *Replace Mower Belts* on page 31.
	PTO switch, wiring, connectors or clutch are faulty.	Contact your Gravely dealer.
Unit moves with engine off and parking brake engaged.	Parking brake needs adjustment.	Adjust parking brake. See *Adjust Parking Brake* on page 30.
	Parking brake is faulty.	Contact your Gravely dealer.
Unit does not drive straight.	Tire pressure is incorrect.	Check tire pressure. See *Specifications* on page 43.
	Steering lever speed limiter bolts need adjustment.	Adjust speed limiter bolts. See *Adjust Limiter Bolts* on page 28.
	Transaxles and / or transaxle linkages need adjustment.	Adjust hydraulic neutral and / or mechanical neutral on both sides of unit. See *Adjust Hydraulic Neutral* on page 29 first, then see *Adjust Mechanical Neutral* on page 30.

TROUBLESHOOTING		
Problem	**Probable Cause**	**Correction**
Unit creeps when steering levers are in neutral position.	Transaxles and / or transaxle linkages need adjustment.	Adjust hydraulic neutral and / or mechanical neutral on both sides of unit. See *Adjust Hydraulic Neutral* on page 29 first, then see *Adjust Mechanical Neutral* on page 30.
Poor cutting quality.	Engine throttle control lever is set too low.	Move throttle control lever to the fast position. See *Throttle Control Lever* on page 13.
	Mower blades not level or mower deck pitch is incorrect.	Level and adjust pitch of mower deck.See *Level & Pitch Mower Deck* on page 37.
	Mower blades are dull or faulty.	Sharpen or replace mower blades. See *Check Mower Blades* on page 23.
	Mowing speed is too fast.	Drive slower when cutting grass.
	Belt tension or condition is poor.	Replace mower belts. See *Replace Mower Belts* on page 31.
	Cutting height is too low.	Do not set height of cut too low. For very tall grass, mow twice.
Blades do not stop within 5 seconds.	Clutch brake plates worn.	Replace clutch. Contact your Gravely dealer.

STORAGE



WARNING: AVOID INJURY. Read and understand the *Safety* section before proceeding.

SHORT-TERM STORAGE

IMPORTANT: NEVER wash unit with high-pressure water or store outdoors.

1. Allow unit to cool and clean with mild soap and water.
2. Tighten all hardware to correct specifications.
3. Inspect unit for visible signs of wear or damage. Repair as needed.
4. Prepare fuel system for storage.

NOTICE: Gravely recommends using a quality fuel stabilizer in all fuel. Gasoline left in the fuel system without a stabilizer, even for short periods of time, deteriorates and leaves gummy deposits in the system that may damage the carburetor and fuel hoses, filter and tank. For the best effectiveness, add stabilizer to all fuel containers whenever purchasing fuel. Add the stabilizer to the container before adding fuel.

   a. Add fuel stabilizer (see *Service Parts* on page 22) or equivalent according to manufacturer's instructions to the fuel tank and any fuel containers with remaining fuel.
   b. Run engine outdoors for at least 5 minutes to allow stabilizer to reach the carburetor.

5. Turn ignition key to off position and remove from ignition.
6. Store unit in a cool, dry, protected area. DO NOT store unit outdoors.

LONG-TERM STORAGE

1. Perform short-term storage procedures.
2. Lubricate as directed in *Maintenance* on page 21.
3. Touch-up all scratched painted surfaces.
4. Remove and charge battery. See *Charge Battery* on page 25. Store battery in a cool, dry, protected area.
5. Store unit in a cool, dry, protected area. Do not store unit outdoors.

START-OF-SEASON PREPARATION

1. Before adding fuel for the first time after long-term storage, add fresh, stabilizer-treated fuel to fuel tank and any fuel containers with remaining fuel.
2. Charge and install the battery.

ACCESSORIES

See your Gravely dealer for a complete list of compatible accessories and attachments for your unit.

Description	Part No.
Gravely Equipment Cover	71515300
Entry Assist Handle Kit	71801200
Floor Mat	79110600
48" LaserEdge Mower Blade Kit	79219800
52" LaserEdge Mower Blade Kit	79110100
60" LaserEdge Mower Blade Kit	79110200
48" Mulch Kit	79112500
52" Mulch Kit	79220200
60" Mulch Kit	79109800
Flex Fork Suspension Kit	79108300
Operator Controlled Discharge Baffle Kit	79223700
48" LaserEdge Mulch Blade Kit	79219200
52" LaserEdge Mulch Blade Kit	79219900
60" LaserEdge Mulch Blade Kit	79220000
Headlight Kit	79108600
Hitch Kit	79108500
Striping Kit	79221800
22" Rear Tweel Caster Kit	79702900
13" Front Tweel Caster Kit	79110900
Cloth Sunshad Kit	79212600
Hard Top Sunshade Kit	79218000
13" Semi-Pneumatic Tire Kit	79703400

Description	Part Number
Bagger-to-Wide ROPS Kit	79113200
2-Bag Bagger*/**	89101400
• Completion Kit for 48" Decks	79112700
• Completion Kit for 52" Decks	79112800
• Completion Kit for 60" Decks	79112900

*Also requires installation of a completion kit for the unit's deck size.

**Also requires installation of Bagger-to-Wide ROPS Kit 79113200.

SPECIFICATIONS

Model Number	**991297**	**991298**	**991299**
Description	HD Pro 48	HD Pro 52	HD Pro 60
Engine	Kawasaki FT691V		FT730V
Engine Displacement – cm^3 (in^3)	726 (44.3)		
Maximum RPM – No Load	3600 ± 100		
Oil Capacity	Refer to engine manual.		
Liquid or Air Cooled	Air		
Transmission			
Type	Hydro-Gear® ZT-3200		
Oil	15W-50 Full-Synthetic Hydraulic Fluid (Gravely part number 00057100) or equivalent		
Hydraulic Oil Filter	Yes		
Drive			
Forward Maximum – km/h (mph)	12.9 (8)		
Reverse Maximum – km/h (mph)	6.4 (4)		
Turning Radius	Zero		
Brakes	Parking		
Electrical			
Starter	Electric		
Battery	12-Volt Maintenance-Free, 300 CCA 10U1L		
PTO (Power Take-off)	Electric PTO Clutch / Brake		
Fuel			
Fuel Tank Capacity – Liter (gal)	19.3 (5)		
Type	See Engine Manual		
Size and Weight			
Length – cm (in)	200.7 (79)		
Width – cm (in) • Discharge Chute Down • Discharge Chute Up	157.5 (62) 125.7 (49.5)	170.2 (67) 141 (55.5)	189.2 (74.5) 160 (63)
Height – cm (in) • With ROPS Extended • With ROPS Folded	184.9 (72.8) 120.7 (47.5)		
Weight – kg (lbs)	405.5 (894)	415.9 (917)	433.6 (956)
Tires			
Front Tire Size – in	13 x 6.5-6		
Rear Tire Size – in	22 x 10-10	22 x 11-10	22 x 12-10
Recommended Front Tire Pressure – kPa (psi)	137.9 – 172.4 (20 – 25)		
Recommended Rear Tire Pressure – kPa (psi)	82.7 – 103.4 (12 – 15)		
Mower Deck			
Cutting Height – cm (in)	3.8 – 12.7 (1.5 – 5.0)		
Cutting Height Increments – cm (in)	0.635 (0.25)		
Cutting Width – cm (in)	121.9 (48)	132 (52)	152.4 (60)
Mower Deck Lift	Mechanical Pin Lock		

NON-STANDARD TORQUE VALUES			
Component	**Torque (lb-in)**	**Torque (lb-ft)**	**Torque (N•m)**
Transaxle to frame	173 – 259	14 – 22	20 – 29
Engine to frame (Kawasaki)	288 – 312	24 – 26	33 – 35
Clutch to engine	565 – 691	47 – 58	64 – 78
Blade to spindle	1380 – 1920	115 – 160	156 – 217
Pulley to spindle	480 – 588	40 – 49	54 – 66
Lug nuts to wheel hub	720 – 1080	60 – 90	19 – 42
ROPS posts to frame	720 – 900	60 – 75	81 – 102
Transaxle drive idler / tensioner to frame	384 – 468	32 – 39	43 – 53

Outdoor Power Equipment Limited Warranty

AriensCo warrants to the original purchaser that Gravely brand products purchased on or after 09/01/2026 will be free from defects in material and workmanship for the time period noted in the chart below.

If any product, EXCEPT AXIS skidsteer, is rented or leased, then the duration of these warranties shall be 90 days after the date of purchase.

An authorized Gravely dealer will repair any defect in material or workmanship, and repair or replace any defective part, subject to the conditions, limitations and exclusions set forth herein. Such repair or replacement will be free of charge (labor and parts) to the original purchaser; except as noted below. Pick-up and delivery are at the owner's expense.

Warranty coverage between models in the same product family can vary.
Refer to the warranty code printed on your unit's model and serial number decal for your unit's warranty coverage, not the product family designation. Refer to the Operator's Manual for your unit's model and serial number decal location.

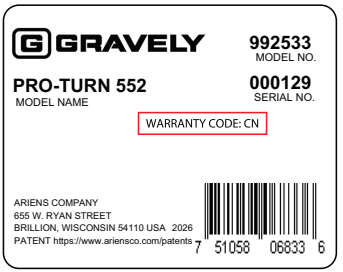

Warranty Code	Product Family	Warranty Period
AA	Serialized Attachments	1 Year.
AB	Serialized Attachments	2 Years.
CH	Pro-Turn®, Pro-Turn Z, Pro-Turn ZX and HD Pro	4 Years or 750 Hours.*
CK	Compact-Pro® and Pro-Walk® Hydro	4 Years or 750 Hours.* No Hour Limit for First 2 Years.
CL	Pro-Turn 100 and Pro-Stance®	5 Years or 1000 Hours.* No Hour Limit for First 2 Years.
CM	Pro-Turn 200 and 300	5 Years or 1250 Hours.* No Hour Limit for First 2 Years.
CN	Pro-Turn 500, 600, MACH ONE and Pro-Stance Ultra	5 Years or 1500 Hours.* No Hour Limit for First 2 Years.
CS	AXIS®	1 Year or 1000 Hours.* Includes Rented or Leased Products.
CT	OVIS and OVIS-X	2 Years or 250 Hours.*
CU	Pro-Turn 200 and 400	5 Years or 1250 Hours.* No Hour Limit for First 2 Years.
CV	Pro-Turn 400X, 600, and MACH ONE	5 Years or 1500 Hours.* No Hour Limit for First 2 Years.
HE	ZT	2 Years or 150 Hours.*
HF	ZT X	3 Years or 300 Hours.*
HG	ZT XL	4 Years or 400 Hours.*
HH	ZT HD and Z-Stance	4 Years or 500 Hours.*
UG	Atlas JSV®	1 Year.

* Whichever comes first.

Special Extensions

The chart below details special **extensions** to warranty terms. Warranty terms are total time periods covered. If any product is rented or leased, there are no extensions to the 90-day warranty.

Warranty Code	Warranty Term Extension	Warranty Period	Detail
CL, CM, CN, CU, CV	Mower Deck Shell and Main Frame	Lifetime Limited.	Warranty is for parts only after the initial warranty period. Components are covered for manufacturer's defect only, not wear.

Exclusions and Limitations

The charts below detail special **exclusions and limitations** to this warranty.

Warranty Term Exclusions	Warranty Period
Including, but not limited to air filters, brake arms, brake linings, brake shoes, brushes, cutters, fuel filters, halogen headlights, halogen light bulbs, lubricants, mower blades, flail blades, oil, oil filters, spark plugs, scraper blades, shear bolts, skid shoes and spoon tines.	Components are not covered under warranty.

Warranty Term Limitations	Warranty Period
Battery	Battery warranty is one year. Units used for rental or lease have no exceptions to the 90-day warranty. Total battery claim reimbursement will not exceed $65.00 USD.
Belts and Tires	180 days or 250 hours (whichever comes first).
Cloth, Plastic, and Rubber Components. Mufflers.	Components are covered for manufacturer's defect only, not wear.

Exclusions – Items Not Covered by This Warranty

- Non-genuine Gravely service parts are not covered by this warranty and may void the warranty if their use results in premature wear or damage to the product.
- Damages resulting from the installation or use of any part, accessory, or attachment which is not approved by the AriensCo for use with product(s) identified herein are not covered by this warranty.
- Any misuse, alteration, improper assembly, improper adjustment, neglect, or accident which requires repair is not covered by this warranty.
- Repairs or adjustments required due to failure to use fresh fuel or failure to properly prepare the unit for periods of non-use.
- **Use of gasoline blends exceeding 10% ethanol voids any and all warranties.**
- **Any tampering with the hour meter voids any and all warranties.**
- Products are designed to the specifications in the area that the product was originally distributed. Different areas may have significantly different legal and design requirements. This warranty is limited to the requirements in the area in which the unit was originally distributed. AriensCo does not warrant this product to the requirements of any other area. Warranty service is limited to service within the area originally distributed.
- In countries other than the United States and Canada, contact the AriensCo dealer for warranty policies that govern within your country. Rights may vary from country to country and within any one country.

Evaporative Emissions Control Warranty Exception

As required by the California Air Resources Board (CARB) and the US Environmental Protection Agency (EPA) the evaporative emissions control system is warranted to the ultimate purchaser, and any subsequent owner, for two years.

The CARB and EPA evaporative emissions control system warranty is described in a separate evaporative emission control warranty statement.

Special Exclusions for Job-site Vehicles

The following uses void the warranty terms on Atlas JSV (Warranty Code UG) vehicles:

- Renting or leasing the vehicle.
- Using the vehicle to tow or carry loads in excess of the limits specified in the operator's manual.
- Modifying the vehicle with parts and accessories that are not genuine or authorized Gravely parts or accessories.
- Modifying the vehicle without express written authorization from Gravely.

- Operating the vehicle when it has not been completely and properly assembled and pre-delivered by an authorized Gravely dealer.

Transmissions

The charts below detail transmission warranty information. Transmission warranty terms may vary from the specific terms of this warranty. If inconsistent, the terms of the transmission warranty shall apply to the transmission and its component parts.

Transmission Manufacturer	Detail
Hydro-Gear Transaxle	For products with a warranty code other than CU or CV, refer to the Hydro-Gear warranty on www.Gravely.com for your unit's transaxle warranty coverage. The warranty is administrated by AriensCo. Refer to page 45 for a list of warranty codes, how to identify your unit's warranty code, and the coverage period of each warranty code.
Parker Hannifin Drive & Valve Systems	Parker Transaxles, Pumps, Wheel Motors and Valves are warranted for the length of equipment warranty period. Refer to Warranty Code chart above. Warranty is administered by AriensCo.

Warranty Code	Detail
CU, CV	Products with these warranty codes feature a transaxle warranty coverage period matching the unit's warranty coverage period. The warranty is administered by AriensCo. Refer to page 1 for a list of warranty codes, how to identify your unit's warranty code, and the coverage period of each warranty code.

Engines

Engine warranty terms may vary from the specific terms of this warranty. If inconsistent, the terms of the engine warranty shall apply to the engine and its component parts. Engines are covered by the engine manufacturer's warranty. Refer to the engine manufacturer's warranty statements.

Parts and Accessories

Service replacement parts and non-serialized accessories are warranted for 90 days from date of purchase. Labor is not included.

Customer Responsibilities

Register the product immediately at the time of sale. If the dealer does not register the product, the customer must register the unit at www.gravely.com. Customer is required to present proof of purchase to validate unit is within its warranty period.

To obtain warranty service, the **original purchaser** must:

- Complete maintenance and adjustments explained in the Operator's Manual.
- Promptly notify AriensCo or an authorized Gravely service representative of the need for warranty service.
- Transport the product to and from the place of warranty service at owner's expense.
- Have the warranty service performed by an authorized Gravely service representative.

To find an authorized dealer use the dealer locator on our websites, or contact us by mail or phone.

Globally except Australia or New Zealand:	Australia:	New Zealand:
AriensCo 655 W. Ryan Street Brillion, WI 54110 Phone: (920) 756 - 4688 www.gravely.com	Roy Gripske & Sons Pty Ltd 11 Sodium Street Narangba Queensland 4504 Australia Phone: (61130) 036 3004 www.rgs.com.au	Masport Ltd 320 Ti Rakau Drive East Tamaki Auckland 2013 New Zealand Phone: 0800 627 7678 www.masport.co.nz

Disclaimer

AriensCo may from time to time change the design of its products. Nothing contained in this warranty shall be construed as obligating the AriensCo to incorporate such design changes into previously manufactured products, nor shall such changes be construed as an admission that previous designs were defective.

Limitation of Remedy and Damages

AriensCo liability under this warranty, and under any implied warranty that may exist, is limited to repair of any defect in workmanship, and repair or replacement of any defective part. AriensCo shall not be liable for incidental, special, or consequential damages (including lost profits). Some states do not allow the exclusion of incidental or consequential damages, so the above limitation or exclusion may not apply to you.

AriensCo shall not be held liable for damages, including premature wear and tear, or injuries caused by installation of unauthorized parts and accessories or for parts and accessories not installed by an authorized Gravely dealer.

Australian Consumer Law

The following applies solely to warranties subject to Subsection 102(1) of the Australian Consumer Law: Our goods come with guarantees that cannot be excluded by the Australian Consumer Law. You are entitled to a replacement or refund for a major failure and for compensation for any other reasonably foreseeable loss or damage. You are also entitled to have the goods repaired or replaced if the goods fail to be of acceptable quality and failure does not amount to a major failure.

Disclaimer of Further Warranty

AriensCo makes no warranty, express or implied, other than what is expressly made in this warranty. If the law of your state provides that an implied warranty of merchantability, or an implied warranty of fitness for particular purpose, or any other implied warranty, applies to AriensCo then any such implied warranty is limited to the duration of this warranty. Some states do not allow limitations on how long an implied warranty lasts, so the above limitation may not apply to you.

This warranty gives you specific legal rights, and you may also have other rights which vary from region to region.

GRAVELY

655 West Ryan St.
Brillion, WI 54110

www.gravely.com

See parts, accessories, and attachments for your unit at parts.gravely.com.

A parts manual for your unit is available for free download or purchase at gravely.com.

WARNING: Cancer and Reproductive Harm - www.P65Warnings.ca.gov

ARIENS|CO