PRO-TURN® 400

Operator's Manual
Manuel de l'utilisateur

GRAVELY

MADE IN THE UNITED STATES
WITH PARTS GLOBALLY SOURCED

Models

983001 – Pro-Turn 472
(SN 000101 +)

983002 – Pro-Turn 460
(SN 000101 +)

983003 – Pro-Turn 452
(SN 000101 +)

983004 – Pro-Turn 460
(SN 000101 +)

983017 – Pro-Turn 460 Tweel
(SN 000101 +)

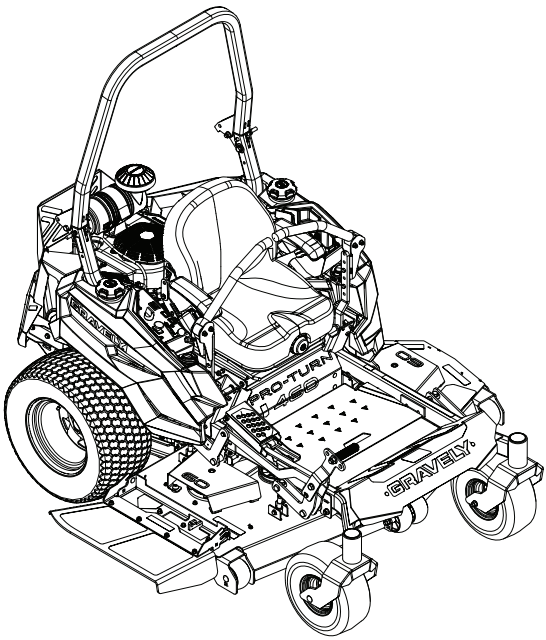

E10 E15 E20 E85

EN **ENGLISH**

FR **FRANÇAIS**

REGISTER YOUR PRODUCT!

30356200A • 9/26
Printed in USA

TABLE OF CONTENTS

WELCOME 1
Register Your Product!. 1
SAFETY. 2
Practices & Laws 2
Emission Control System. 2
Required Operator Training 2
Safety Alert Symbol 2
Signal Words 2
Safety Decals. 3
Safety Instructions 6
ASSEMBLY. 10
CONTROLS & FEATURES. 13
Ignition Key 15
Choke Control Lever 15
Throttle Control Lever 15
Power Take-off (PTO) Switch 15
Fuel Valve 15
Oil Pressure Warning Light 15
Deck Lift Pedal. 15
Height-of-Cut Adjustment System 16
Transport Lock. 16
Transport Lock Release Lever. 16
Transaxle Bypass Valves. 16
Anti-scalp Wheels 16
Seat Adjustment Lever. 16
Seat Suspension Adjustment Dial 16
Backrest Adjustment Dial. 16
Seat Latch Release Lever 16
Hour Meter. 16
Parking Brake Lever 17
Steering Levers 17
Rollover Protection Structure (ROPS) . . 17
Safety Interlock System. 17
BEFORE OPERATION 17
Position ROPS. 18
Adjust Seat. 19
Adjust Deck-Lift Pedal 19
Set Cutting Height 20
Adjust Steering Levers. 20
Open Fuel Valve 21
OPERATION 22
Emergency Stopping 22
Start The Engine 22
Operate Unit 22
Stop the Engine 23
Move Unit Manually 23
Transport Unit 23
Release Transport Lock. 23
MAINTENANCE 24
Service Position. 24
Maintenance Schedule 24
Service Parts 25
Clean Mower Deck 25
Check Safety Interlock System 26
Check Parking Brake. 26
Check Hydraulic System 26
Check Tire Pressure 28
Check Mower Belts 28
Check Mower Blades. 28
Clean Battery. 29
Charge Battery. 30
Check Fasteners 30
Lubricate Unit. 30
SERVICE & ADJUSTMENTS 31
Electrical Service 31
Adjust Unit to Drive Straight. 31
Adjust Transaxles 32
Adjust Parking Brake 34
Replace Mower Belts. 34
Replace Transaxle Drive Belt 37
Adjust Anti-Scalp Wheels 38
Remove and Install Mower Deck. 39
Adjust Deck-Lift Assist. 40
Level and Pitch Mower Deck. 41
TROUBLESHOOTING 43
STORAGE. 45
Short-Term Storage. 45
Long Term Storage 45
Start-of-Season Preparation 45
ACCESSORIES. 45
SPECIFICATIONS. 47
SPECIFICATIONS. 48
NON-STANDARD TORQUE VALUES . 49
WARRANTY 50

WELCOME

REGISTER YOUR PRODUCT!

It is extremely important to register your product at time of purchase. Product registration activates the warranty and establishes a communication link from AriensCo.

Locate the model and serial number decal on your unit and register those numbers online at www.gravely.com. See Figure 1 for decal location. Be aware that the original selling dealer may have already completed product registration on behalf of the original purchaser.

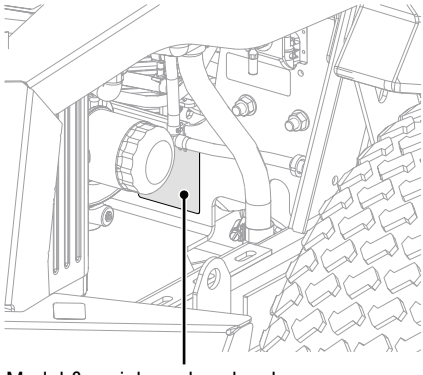

Model & serial number decal

Figure 1

Record model number here.

Record serial number here.

MANUALS

Before operating or servicing the unit, carefully and completely read the manuals provided with the unit. They contain safety instructions and important information about unit controls.

The engine on this unit is covered by a separate manual. Refer to the engine manual for engine service recommendations. Contact the engine manufacturer for a replacement manual if necessary.

Your dealer must review important information in this manual with you before or upon delivery of the unit. It is your responsibility to read and understand all safety precautions and instructions in the manuals. If you do not understand or have difficulty following the instructions, contact your Gravely dealer for assistance. To locate your nearest Gravely dealer, go to www.gravely.com.

A parts manual for your unit is available for free download or purchase at www.gravely.com.

Manual del operador español está disponible para su descarga gratuita o compra en www.gravely.com.

DISCLAIMER

Gravely reserves the right to discontinue, make changes to, and add improvements upon its products at any time without public notice or obligation. The descriptions and specifications contained in this manual were in effect at printing. Equipment described in this manual may be optional. Some illustrations may not be applicable to your unit.

SAFETY

Read these safety rules and follow them closely. Failure to follow these rules could lead to loss of control of unit, severe personal injury or death to you or bystanders, or result in damage to property or the machine.

PRACTICES & LAWS

Practice usual and customary safe working precautions. Learn applicable rules and laws in your area. Always follow the practices set forth in this manual.

EMISSION CONTROL SYSTEM

This equipment and/or its engine may include exhaust and evaporative emissions control system components required to meet U.S. Environmental Protection Agency (EPA) and/or California Air Resources Board (CARB) regulations. Tampering with emission controls and components by unauthorized personnel may result in severe fines or penalties. Emission controls and components can only be adjusted by an Gravely dealer or an authorized engine manufacturer's service center. Contact your Gravely Equipment Retailer concerning emission controls and component questions.

REQUIRED OPERATOR TRAINING



Read and understand the Operator's Manual and decals on the unit. This information is for your safety and the proper use of your equipment. Failure to follow these instructions and warnings may cause death or serious injury. If you have purchased this product from an Gravely dealer, the dealer can provide you with training.

Familiarize yourself and any other operators with all controls and the safe use of the features of this unit. If you loan, rent or sell this product to others, provide them with all manuals.

If you have any questions, please call our customer support line at 920-756-4688 or contact us at www.gravely.com. Do not use this equipment if, after reading the Operator's Manual and the on-board decals, you have any questions about the safe use of this product.

WARNING: AVOID INJURY. This cutting machine is capable of amputating hands and feet and throwing objects. Failure to observe the safety instructions in the manuals and on decals could result in serious injury or death.

SAFETY ALERT SYMBOL

This is the safety alert symbol. It means:

- **ATTENTION!**
- **YOUR SAFETY IS INVOLVED!**

When you see this symbol:

- **BECOME ALERT!**
- **OBEY THE MESSAGE!**

SIGNAL WORDS

The safety alert symbol above and signal words below are used on decals and in this manual. Read and understand all safety messages.

1. Danger

DANGER: Indicates an IMMINENTLY HAZARDOUS SITUATION! If not avoided, WILL RESULT in death or serious injury.

2. Warning

WARNING: Indicates a POTENTIALLY HAZARDOUS SITUATION! If not avoided, COULD RESULT in death or serious injury.

3. Caution

CAUTION: Indicates a POTENTIALLY HAZARDOUS SITUATION! If not avoided, MAY RESULT in minor or moderate injury. It may also be used to alert against unsafe practices.

4. Notice

NOTICE: Indicates information or procedures that are considered important but not hazard related. If not avoided property damage could result.

5. Important

IMPORTANT: Indicates general reference information worthy of special attention.

SAFETY DECALS

The safety decals on your machine are visual reminders of the important safety information in this manual. All messages on your unit must be fully understood and carefully followed. Safety decals on the machine are explained below.

Safety Decal Locations

ALWAYS replace missing or damaged safety decals. Replacement decal part numbers are found in the parts manual for your machine and may be ordered from your dealer.

See Figure 2 for safety decal locations.

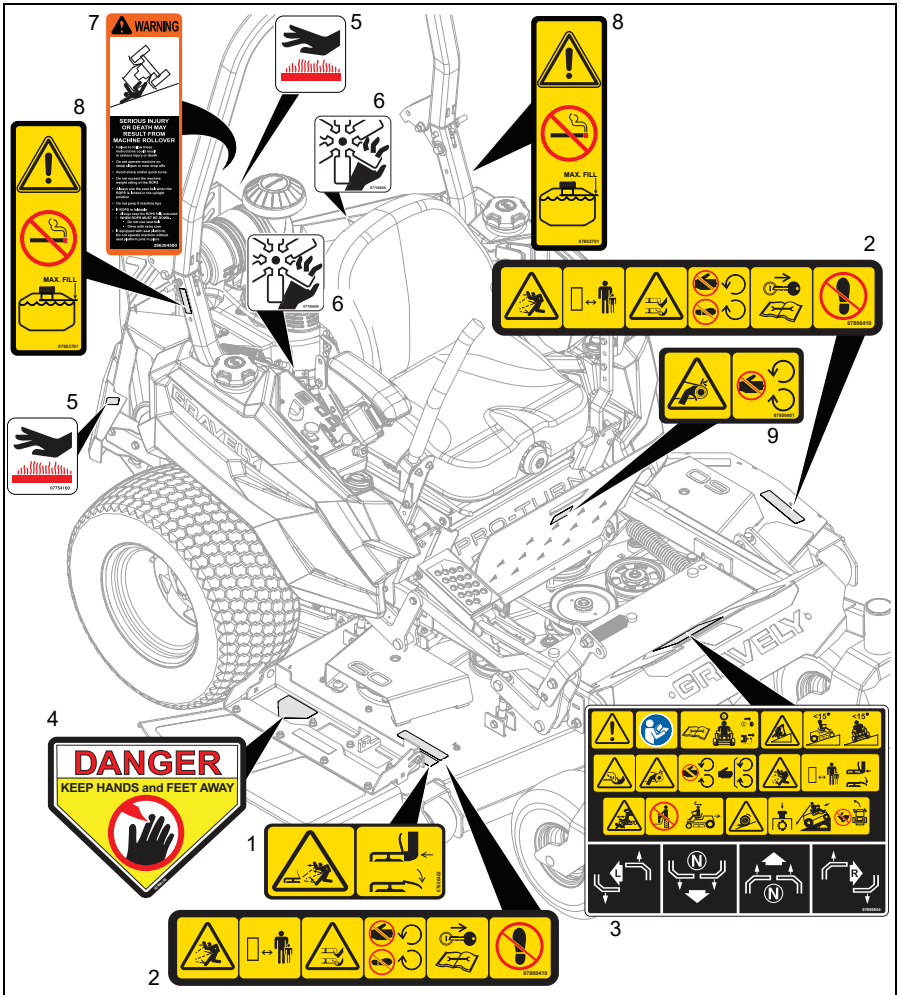

Figure 2

Safety Decal Descriptions

1. DANGER!



Discharge Hazard - NEVER operate unit without discharge chute in operating position. Thrown objects can cause injury or damage.



DO NOT operate mower unless all guards are in operating position or bagger is attached.

2. DANGER!



Discharge Hazard - NEVER direct discharge toward people, pets or property. Thrown objects can cause injury or damage.



Amputation Hazard - NEVER stick hands or feet under deck or shielded areas.



Shut off engine, remove key, and read manual before servicing or making adjustments to unit.



Keep children and others away from unit while unit is in operation.



Keep feet and hands away from all rotating or moving parts.



DO NOT step or stand in this area.

3. DANGER!



DANGER!



Read and understand the operator's manual before operating unit.

3.1 Amputation Hazard



To avoid amputation hazard DO NOT put hands near rotating blades.



To avoid amputation hazard DO NOT put hands near moving belts.



Keep hands away from all rotating or moving parts.



Keep all guards and shields in place.

3.2 Discharge Hazard



Discharge Hazard - NEVER direct discharge toward people, pets or property. Thrown objects can cause injury or damage.

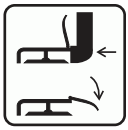

DO NOT operate mower unless all guards are in operating position or bagger is attached.



Keep children and others away from unit while unit is in operation.

3.3 Tipping Hazard



Avoid tipping hazard.



DO NOT operate on slopes over 15°.



DO NOT operate on slopes over 15°.

3.4 Service Hazard



Before servicing unit do the following:



Read owners manual before servicing or making adjustments to unit.



Set parking brake.

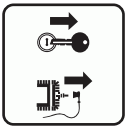

Remove key and disconnect spark plug before servicing or making adjustments to unit.

3.5 Bystander Hazard



DO NOT operate the unit in the presence of bystanders.



DO NOT carry passengers.



Look behind when operating the unit in reverse.

3.6 Loss of Traction Hazard



If loss of traction is experienced do the following:

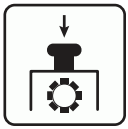

Disengage PTO.



Proceed off slope slowly.



DO NOT try to turn or speed up.

4. DANGER!



ALWAYS keep hands and feet away from discharge chute.

5. HOT PARTS!



DO NOT touch parts which are hot from operation. ALWAYS allow parts to cool.

6. ROTATING PARTS!



AVOID INJURY. Stay clear of rotating parts.

7. WARNING!



SERIOUS INJURY OR DEATH may result from machine rollover.

- Failure to follow these instructions could result in serious injury or death.
- DO NOT operate machine on steep slopes or near drop offs.
- Avoid sharp and/or quick turns.
- DO NOT exceed the machine weight rating of the ROPS.
- ALWAYS use the seat belt when the ROPS is locked in the upright position.
- DO NOT jump if machine tips.
- If ROPS is foldable:
  - — ALWAYS keep the ROPS fully extended.
  - — WHEN ROPS MUST BE DOWN:
    - DO NOT use seat belt.
    - Drive with extra care.
- If equipped with seat platform:
  - — DO NOT operate machine without seat platform pins in place or locks engaged.

ROLLOVER PROTECTIVE STRUCTURE

To maintain operator protection and roll bar certification:

- Replace a damaged roll bar, DO NOT attempt to repair or modify.
- Any alteration of the roll bar must be approved by the manufacturer.
- DO NOT exceed the machine weight rating of the roll bar.

8. WARNING!



Overfilling may cause severe damage to evaporative system!

- NEVER fill fuel tank when engine is running, hot or unit is indoors. NEVER overfill fuel tank.
- Replace fuel cap securely and clean up spilled fuel.



No smoking.

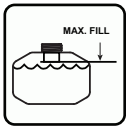

IMPORTANT: DO NOT overfill. Fill fuel tank to below bottom of filler neck.

9. DANGER!



To avoid amputation hazard DO NOT put hands near moving belts.



Keep hands away from all rotating or moving parts.

SAFETY INSTRUCTIONS

The following safety instructions are based on the lawn mower specifications of the American National Standards Institute and ISO in effect at the time of production.

Safe Practices for Ride-On Mowers

If used improperly, this machine is capable of amputating hands and feet and throwing objects. Failure to observe the following safety instructions could result in serious injury or death. Use only for purposes intended as set forth in the Operator's Manual. Other use is improper and may cause serious injury or death.

General Information

Read, understand, and follow instructions and warnings in this manual and on the machine, engine and attachments.

Only allow operators, who are responsible, trained, familiar with the instructions, and physically capable to operate the machine.

DO NOT carry passengers and keep people or pets away from the mowing area.

DO NOT operate the machine while physically or mentally impaired, feeling tired, ill or under the influence of alcohol or drugs.

Follow the manufacturer’s recommendation for wheel weights or counterweights.

DO NOT touch parts which are hot. Allow parts to cool.

Preparation Before Operating

Inspect unit before each use for missing or damaged decals and shields, correctly operating safety interlock system, ROPS and deterioration of grass catchers. Replace or repair as needed.

Clear the operating area of all objects which could be thrown by or interfere with operation of the machine.

Keep the area of operation clear of all bystanders, particularly small children. Stop the machine and attachment(s) if anyone enters the area.

DO NOT operate the machine without the entire grass catcher, discharge chute, or other safety devices in place and functioning properly. Check frequently for signs of damage, wear or deterioration and replace as needed.

NEVER tamper with safety devices. Check their proper operation regularly. NEVER do anything to interfere with the intended function of a safety device or to reduce the protection provided by the safety device.

Check parking brake operation frequently. Adjust and service as required.

Wear appropriate personal protective equipment such as safety glasses, hearing protection, and substantial footwear. DO NOT mow barefoot or while wearing sandals.

Operating

Improper use of power equipment can cause serious permanent injury or death to the operator or a bystander. Understand:

- How to operate all controls
- The functions of all controls
- How to STOP in an emergency
- Braking and steering characteristics
- Turning radius and clearances

If the operator or the mechanic cannot read the manual, it is the owner’s responsibility to explain it to them.Manuals are available in other languages at www.gravely.com.

Only run the engine in well ventilated areas. Exhaust gases contain carbon monoxide, an odorless deadly poison.

Only operate the machine in daylight or good artificial light.

Avoid holes, ruts, bumps, rocks and other hazards. Uneven terrain could overturn the machine, or cause operator to lose their balance, footing and/or control of the mower.

DO NOT put hands or feet near rotating parts or under the machine. Keep clear of the discharge opening at all times.

Avoid slippery surfaces. ALWAYS be sure of your footing.

Stop engine before removing grass catcher or unclogging chute.

DO NOT direct discharge material toward anyone. Avoid discharging material against a wall or obstruction. Material may ricochet back toward the operator. Stop the blade(s) when crossing gravel surfaces. DO NOT mow into roads or across sidewalks.

DO NOT leave a running machine unattended. ALWAYS park on level ground, disengage the attachment, set parking brake, stop engine and remove key (if applicable) before leaving the operator's position.

DO NOT mow in reverse unless absolutely necessary. ALWAYS look down and behind before and while backing.

Lightning can cause severe injury or death. If lightning is seen or thunder is heard in the area, DO NOT operate the machine; seek shelter.

If you strike a foreign object, stop and inspect the machine. Repair, if necessary, before restarting.

ALWAYS check overhead and side clearances carefully before operation. Keep in mind that your mower deck may be wider than your track width.

Children Specific

Tragic accidents can occur if the operator is not alert to the presence of children. Children are often attracted to the machine and the mowing activity. NEVER assume that children will remain where you last saw them.

Keep children out of the operating area and under the watchful care of a responsible adult other than the operator.

Do not carry children, even with the blade(s) shut off. Children could fall off and be seriously injured or interfere with safe machine operation. Children who have been given rides in the past could suddenly appear in the mowing area for another ride and be run over or backed over.

DO NOT allow children under the age of 18 to operate any outdoor power equipment.

Slope Specific

Slopes are a major factor related to accidents. Operation on slopes requires extra caution. If you feel uneasy on a slope DO NOT mow it. Use the parking brake for emergency stops.

DO Not operate on slopes of more than 15°.

Do not mow within 1.2 M (4 feet) of a drop off. Do not mow within 1.2 M (4 feet) of a pond or other waterway.

The primary hazard of slope operation is loss of control and/or roll over.

Mow up and down slopes, NEVER across. Exercise caution when changing direction on slopes. Use caution while operating near dropoffs.

Avoid mowing wet grass. Wet surfaces can cause a loss of traction and control.

DO NOT operate machine under any condition where traction, steering, or stability is in question. Tires could slide even if the wheels are stopped.

Always keep the machine in gear when going down slopes. Do not coast downhill.

Avoid starting and stopping on slopes. Avoid making sudden changes in speed or direction. Make turns slowly and gradually.

Use extra care while operating machine with a grass catcher or other attachment(s). They can affect the stability of the machine.

Fire and Fuel Specific

Extinguish all cigarettes, cigars, pipes and other sources of ignition.

Use only an approved fuel container.

DO NOT remove fuel cap or add fuel with the engine running or while hot.

DO NOT refuel indoors or in enclosed spaces.

DO NOT store the machine or fuel container, or refuel, where there is an open flame, spark, or pilot light such as on a water heater or other appliance.

If fuel is spilled, DO NOT attempt to start the engine and avoid creating any source of ignition until fuel vapors have dissipated.

To help prevent fires: keep machine free of grass, leaves, or other debris build up; clean up oil or fuel spillage and remove any fuel soaked debris; allow engine to cool before storing.

Use extra care in handling gasoline and other fuels. They are flammable and vapors are explosive.

Hauling

Use a single full-width ramp for loading and unloading a machine for transport. Secure with appropriate straps.

Towing

Follow the manufacturer’s recommendation for weight limits for towed equipment and towing on slopes.

ROPS

The ROPS is an integral safety device. Do not remove or alter the ROPS.

Keep a folding ROPS in the raised and locked position and use the seat belt when operating the machine.

Lower a folding ROPS temporarily only when absolutely necessary. Do not wear the seat belt when folded down. There is no rollover protection when a folding ROPS is in the down position.
Frequently inspect the ROPS and the seatbelt for damage. Replace a damaged ROPS. Do not repair or alter.

Service
Keep machine in good working order. Replace worn or damaged parts.
Use caution when servicing blades. Wrap the blade(s) or wear gloves. Replace damaged blades. DO NOT repair or alter blade(s).
Disconnect spark plug wire(s) and the negative battery cable before making any repairs.
Use only attachments recommended by AriensCo that are appropriate to your use and can be used safely in your application.
The use of non-genuine replacement parts or accessories could adversely affect machine operation and safety.
DO NOT change engine governor setting or overspeed the engine.

ASSEMBLY

WARNING: Read and understand the *Safety* section before proceeding.

1. Remove bag and packaging materials from unit.
2. Remove pins and fold crate ends outward.

See Figure 3.

3. Remove hardware from negative (-) battery cable, but DO NOT discard.
4. Secure negative (-) battery cable to negative (-) battery terminal with hardware removed in step 3.

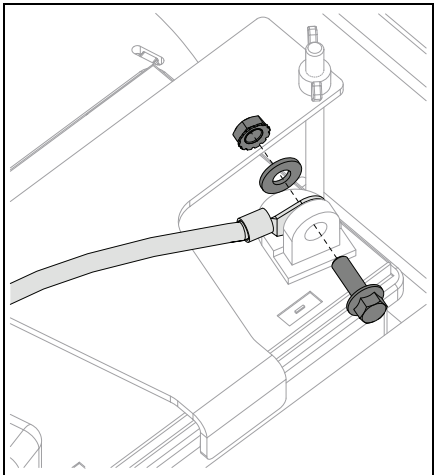

Figure 3

IMPORTANT: Ensure operator presence control (OPC) wire is connected to the presence sensor under the seat.

5. Rotate seat into the operating position.
6. Remove lock pins from rollover protection structure (ROPS) support arms. See Figure 4.

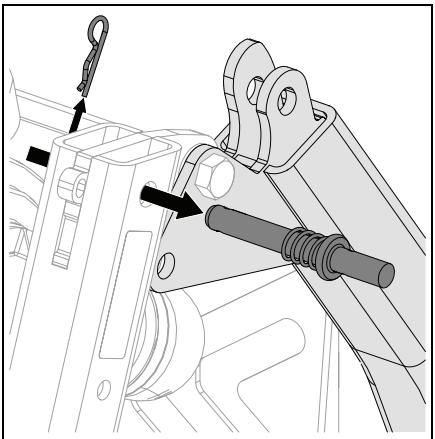

Figure 4

7. Remove ROPS anti-rattle bumpers and bumper hardware from the literature pack.

See Figure 5.

8. Raise ROPS slightly and temporarily reinstall lock pins through lower holes in ROPS hoop.
9. Slowly lower ROPS until it rests against the lower support arms.
10. Secure bumpers to ROPS with hardware from literature pack **and torque to 4.1 – 5.4 N•m (3 – 4 lb-ft)** or until split washer is flattened.

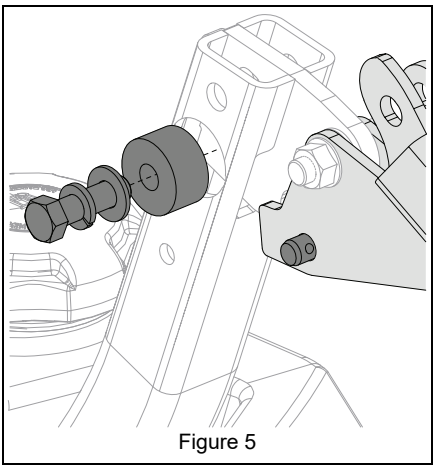

Figure 5

11. Remove lock pins and rotate ROPS to the raised position.

12. Reinstall lock pins through hinge plates to secure ROPS in the raised position. Secure lock pins with hairpins. See Figure 6.

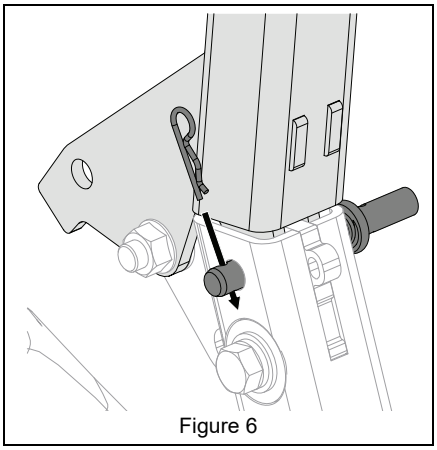

Figure 6

See Figure 7.

IMPORTANT: Adjust steering control levers to identical heights.

13. Remove hardware retaining steering control levers and remove levers from lower control arms.
14. Position steering levers at desired height, align with nearest holes in lower control arms, and secure with original hardware.

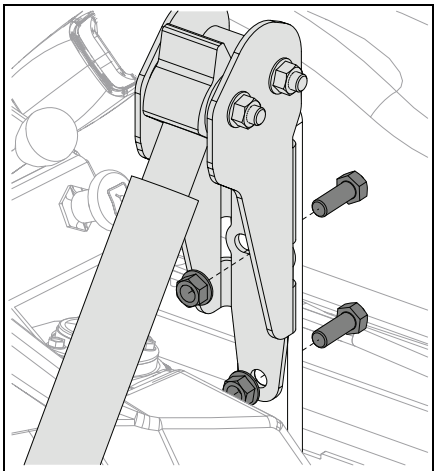

Figure 7

15. Remove hardware retaining eccentric spacers to steering control levers and remove spacers. Retain parts. See Figure 8.

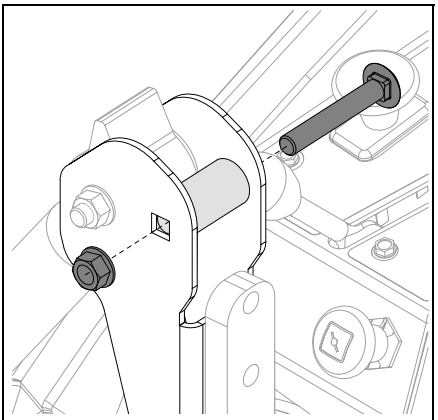

Figure 8

16. Rotate steering levers into their operating positions and reinstall eccentric spacers with their original hardware. See Figure 9.

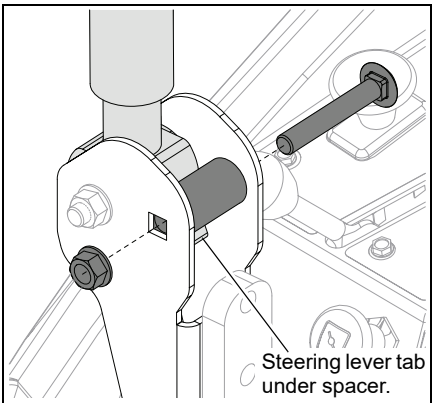

Figure 9

17. Adjust steering levers and lever alignment. See *Adjust Steering Levers* on page 20.
18. Add a small amount of gasoline to the fuel tank. See *Before Operation* on page 17 for fuel specification.
19. Check engine oil level and add oil if needed. Refer to the engine manual for details.
20. Check hydraulic fluid level and add fluid if needed. See *Check Hydraulic System* on page 26.

21. Check tire pressures. See *Check Tire Pressure* on page 28 and *Specifications on Page 47*.
22. Inspect all hardware and tighten if loose.
23. Verify safety interlock system is operating. See *Check Safety Interlock System* on page 26.

WARNING: FAILURE OF INTERLOCK together with improper operation can result in severe personal injury.

24. Start the engine, set the throttle to a slow position, and slowly drive unit off shipping crate. See *Start The Engine* on page 22 and *Operate Unit* on page 22.
25. Stop unit, engage parking brake, and stop the engine. See *Stop the Engine* on page 23
26. Lift discharge chute up slightly and rotate into the operating position. See Figure 10.

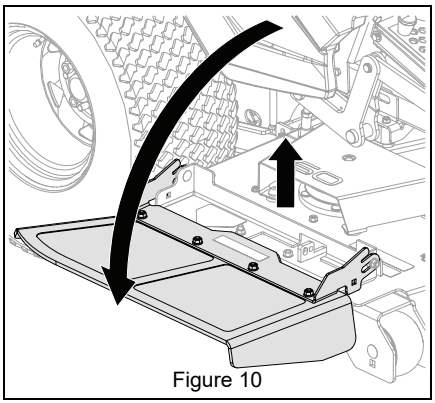

Figure 10

27. Check battery and charge if needed. See *Charge Battery* on page 30.
28. Lubricate all fittings. See *Maintenance Schedule* on page 24.
29. Verify mower deck is level and adjust, if necessary. See *Check Deck Level and Pitch* on page 41.
30. Check function of all controls and ensure unit operates correctly. See *Controls & Features* on page 13.

WARNING: FAILURE OF CONTROLS could result in death or serious injury.

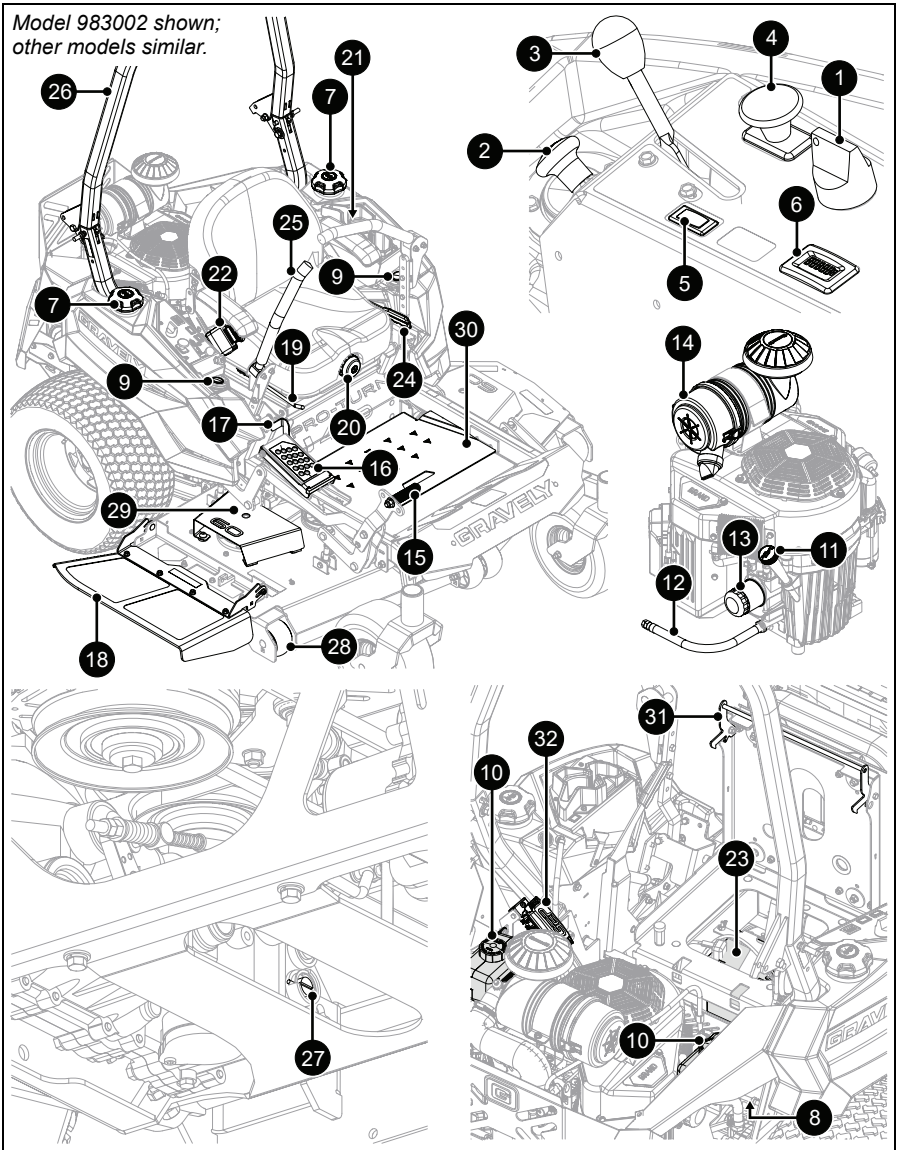
Model 983002 shown;
other models similar.
1
2
3
4
5
6
7
8
9
10
11
12
13
14
15
16
17
18
19
20
21
22
23
24
25
26
27
28
29
30
31
32
GRAVELY

Figure 11

1. Ignition Key
2. Choke Control Lever
3. Throttle Control Lever
4. Power Take-off (PTO) Switch
5. Oil Pressure Warning Light
6. Hour Meter
7. Fuel Tank and Cap (2)
8. Fuel Valve
9. Fuel Gauge (2)
10. Hydraulic Oil Expansion Tank (2)
11. Oil Fill / Dipstick
12. Oil Drain
13. Engine Oil Filter
14. Air Filter
15. Deck-Lift Pedal
16. Height-of-Cut Adjustment System
17. Transport Lock Release Lever
18. Flip-up Discharge Chute
19. Seat Adjustment Lever
20. Seat Suspension Adjustment Dial
21. Backrest Adjustment Dial
22. Seatbelt
23. Battery (under seat)
24. Parking Brake Lever
25. Steering Lever (2)
26. Rollover Protection Structure (ROPS)
27. Transaxle Bypass Valve (2)
28. Anti-Scalp Wheel (6)
29. Tool-less Belt Cover (2)
30. Deck Access Panel
31. Seat Latch Release Lever
32. Fuse Box

WARNING: AVOID INJURY. Read and understand the *Safety* section before proceeding.

See Figure 11 for all controls and features locations.

IGNITION KEY

See Figure 12.

Controls power to the engine. The key cannot be removed when in on position.

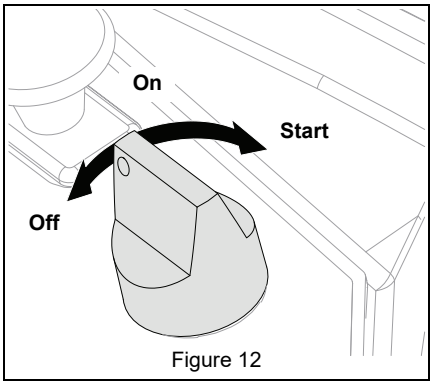

Figure 12

CHOKE CONTROL LEVER

See Figure 13.

Controls air intake to the engine. Choke is engaged to help start a cold engine.

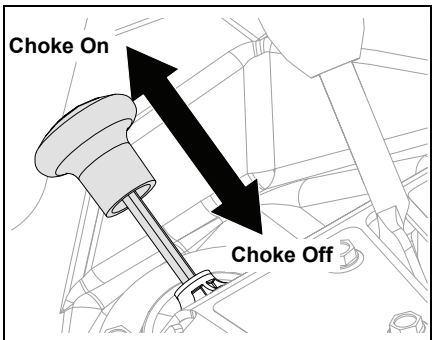

Figure 13

THROTTLE CONTROL LEVER

See Figure 14.

Controls engine speed.

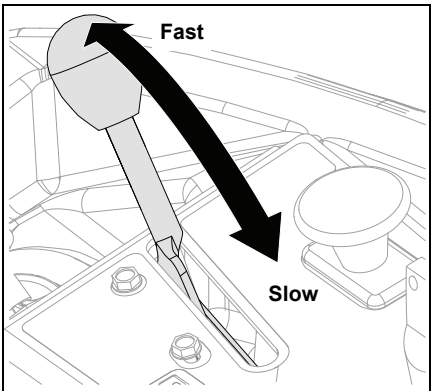

Figure 14

POWER TAKE-OFF (PTO) SWITCH

See Figure 15.

Controls power to mower blades. The engine will not start with the PTO switch in the on position.

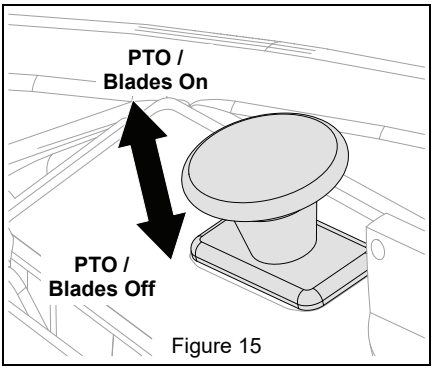

Figure 15

FUEL VALVE

Controls fuel flow to the engine. Directs fuel from left or right fuel tank or stops all fuel flow. See Figure 31.

OIL PRESSURE WARNING LIGHT

Illuminates when oil pressure is low. Stop engine immediately and refer to engine manual.

DECK LIFT PEDAL

Raises mower deck to change height-of-cut setting.

HEIGHT-OF-CUT ADJUSTMENT SYSTEM

Sets the height of cut.

TRANSPORT LOCK

Locks mower deck in the highest position for transporting or moving unit from one work area to another. See *Transport Unit* on page 23.

TRANSPORT LOCK RELEASE LEVER

See Figure 16.

Releases deck from transport lock position.

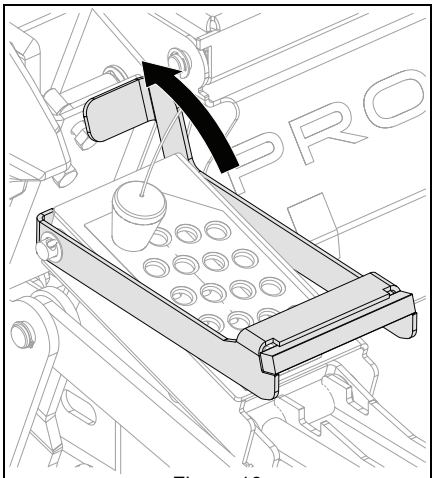

Figure 16

TRANSAXLE BYPASS VALVES

See Figure 17.

Engage and disengage transaxles so unit can be moved with the engine off.

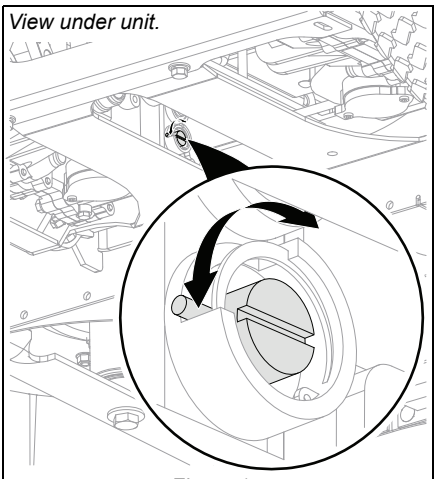

Figure 17

ANTI-SCALP WHEELS

Help prevent the deck from contacting the ground and scalping the lawn when mowing over high spots.

SEAT ADJUSTMENT LEVER

Unlocks seat to allow operator to move seat forward or backward and lock in desired position.

SEAT SUSPENSION ADJUSTMENT DIAL

Adjusts seat suspension firmness for operator comfort.

BACKREST ADJUSTMENT DIAL

Controls backrest angle for operator comfort.

SEAT LATCH RELEASE LEVER

Pull to release seat latch and rotate seat forward for access to components under the seat.

HOUR METER

Measures and displays engine runtime and cannot be reset.

PARKING BRAKE LEVER

See Figure 18.

Engages and releases the parking brake. The engine will not start when brake is released.

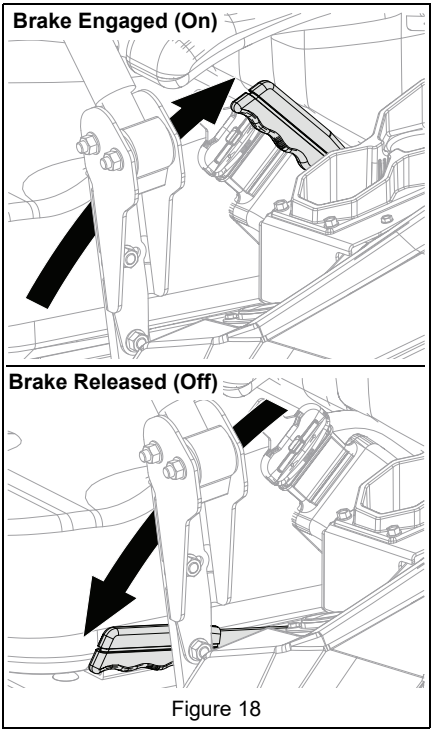

Figure 18

STEERING LEVERS

Control the direction and speed of unit. To stop unit, return both steering levers to neutral.

ROLLOVER PROTECTION STRUCTURE (ROPS)

Help protect operator that is wearing their seatbelt in the event of a rollover. DO NOT wear seatbelt when operating with ROPS in the lowered position.

SAFETY INTERLOCK SYSTEM

Monitors the interaction of various unit safety features and closes an electrical circuit that allows for unit to start and operate when certain conditions are met.

BEFORE OPERATION

WARNING: AVOID INJURY. Read and understand the *Safety* section before proceeding.

1. Clean mower deck. See *Clean Mower Deck* on page 25.
2. Know how to stop in an emergency. See *Emergency Stopping* on page 22.
3. Check fuel level and add fuel if needed.

NOTICE: Use fresh unleaded fuel with an octane rating of at least 87. DO NOT use E85 blended fuels; the engine is not E20 / E30 / E85 compatible. The maximum recommended ethanol content is 10%. Gravely recommends using a quality fuel stabilizer in all fuel. See *Short-Term Storage* on page 45.

4. Check engine oil level and add oil if needed. Refer to engine manual for details.
5. Check hydraulic oil level. See *Check Hydraulic System* on page 26.
6. Check condition of air filter. Refer to engine manual for details.
7. Check function of all controls.
8. Ensure all guards are in place and securely fastened.
9. Check function of the Safety Interlock System by performing the following tests. Contact your Gravely dealer for repair if any of the tests fail.

WARNING: AVOID INJURY. Failure of Safety Interlock System together with improper operation can result in severe personal injury.

Test	Steering Levers	PTO	Parking Brake	Result
Starting Interlock				
1	Neutral	Off	Engaged	Engine starts.
2	Forward, Neutral, Reverse	On	Engaged or Disengaged	Engine does not start.
3	Forward, Neutral, Reverse	On or Off	Disengaged	Engine does not start.
Operating Interlock (Engine On)				
4 *	Forward, Neutral, Reverse	On	Engaged or Disengaged	Engine shuts off.
5 *	Forward, Neutral, Reverse	On or Off	Disengaged	Engine shuts off.
* When operator lifts off seat.				

POSITION ROPS

IMPORTANT: Inspect ROPS and seatbelt for damage and loose or missing hardware.

Raise Center Bar

1. Remove hairpins from lock pins and remove lock pins from hinge plate. See Figure 19.

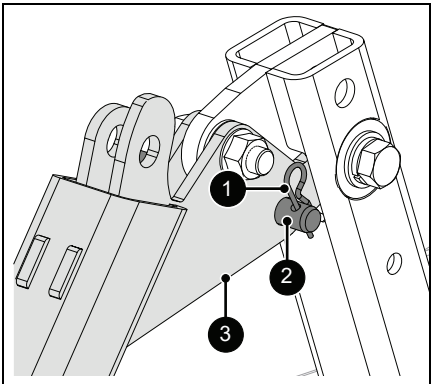

1. Hairpin
2. Lock Pin
3. Hinge Plate

Figure 19

2. Raise center bar and secure with lock pins and hairpins. See Figure 20.

WARNING: AVOID INJURY. Seatbelt MUST be worn when operating with center bar raised.

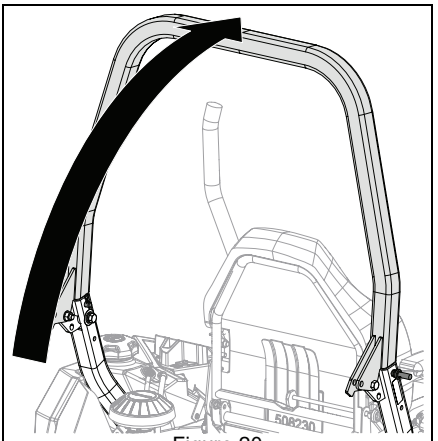

Figure 20

Lower Center Bar

See Figure 21.

WARNING: AVOID INJURY. Lower the center bar only when needed to drive under an object. There is no rollover protection with the center bar in the lowered position. DO NOT wear seatbelt when ROPS is in lowered position.

1. Remove hairpins from lock pins and remove lock pins from hinge plate.
2. Lower center bar and secure with lock pins and hairpins.

IMPORTANT: Return center bar to the raised position when clear of obstacles.

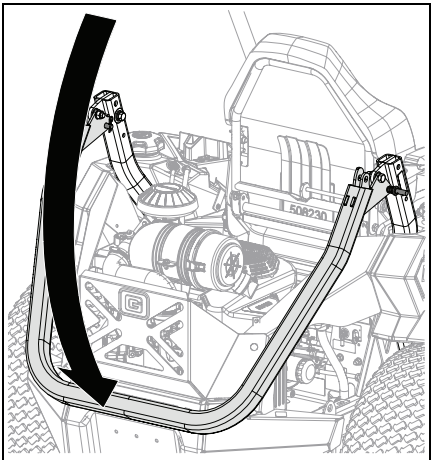

Figure 21

ADJUST SEAT

WARNING: AVOID INJURY. Make all seat adjustments with the unit stopped, parking brake engaged and engine off.

Set Seat Suspension Firmness

See Figure 22.

Rotate seat suspension adjustment dial to match the approximate weight of the operator and adjust suspension firmness.

- Rotate dial clockwise to increase firmness.
- Rotate dial counterclockwise to decrease firmness.

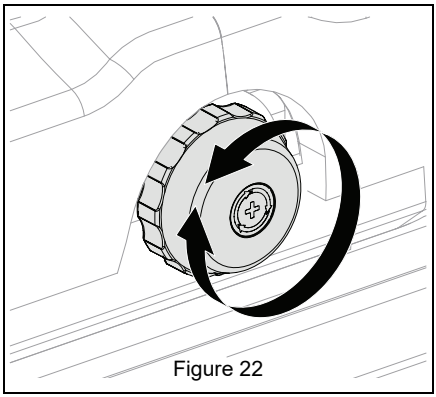

Figure 22

Set Seat Position

See Figure 23.

1. While seated, pull seat adjustment lever inward and slide seat forward or backward to desired position.
2. Release lever and slide seat slightly forward or backward to lock position.

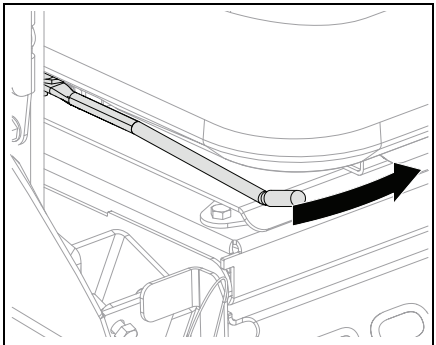

Figure 23

Set Backrest Angle

Rotate dial on left side of seat to adjust backrest angle. See Figure 24.

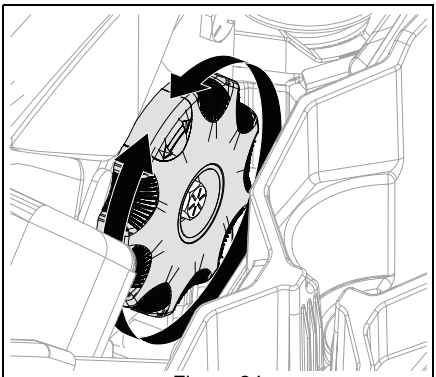

Figure 24

ADJUST DECK-LIFT PEDAL

The deck-lift pedal can be adjusted to one of three positions for the operator's height and preference.

See Figure 25.

1. Remove hardware retaining deck-lift pedal to deck-lift arm.
2. Place pedal in its desired position.
3. Reinstall hardware and **torque to 79 – 95 N•m (52 – 70 lb-ft).**

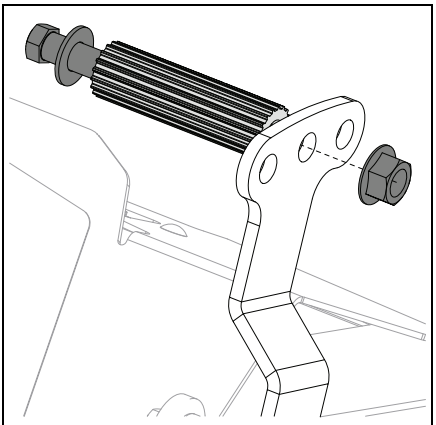

Figure 25

SET CUTTING HEIGHT

See Figure 26.

1. Push deck-lift pedal completely forward until transport lock engages.
2. Insert adjustment pin through desired setting in height-of-cut adjustment system.

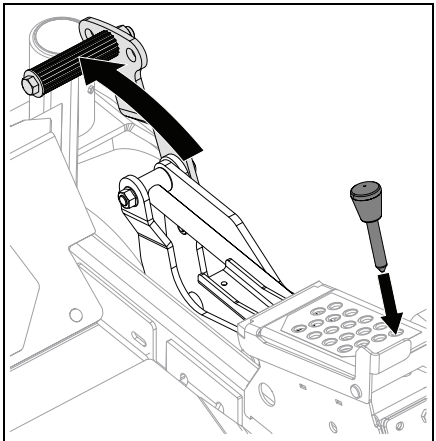

Figure 26

See Figure 27.

3. Push deck-lift pedal slightly forward, and lift and hold transport lock release lever.
4. Slowly release deck-lift pedal until deck rests at its selected cutting height.
5. Release transport lock release lever.

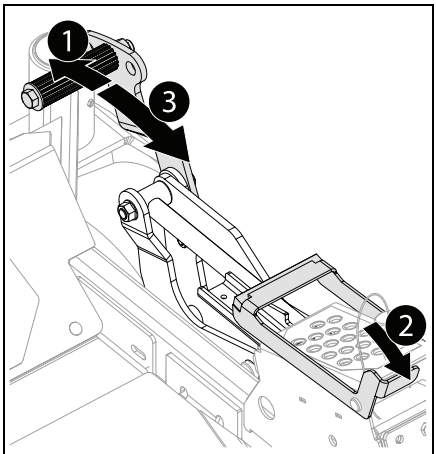

Figure 27

ADJUST STEERING LEVERS

Adjust Height

See Figure 28.

The steering lever height may be adjusted for operator comfort.

IMPORTANT: Adjust steering control levers to identical heights.

1. Remove hardware retaining steering control lever and remove lever from lower control arm.
2. Position steering lever at desired height, align with nearest holes in lower control arm, and secure with original hardware.

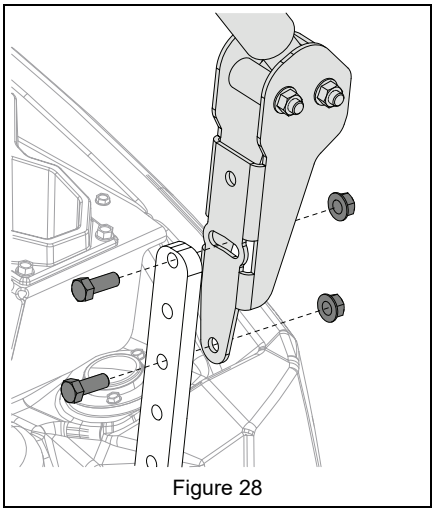

Figure 28

See Figure 29.

3. Turn eccentric spacer so steering levers are at the same height and have a 1.3 – 2.5 cm (1/2 – 1") gap between lever ends.

IMPORTANT: The steering levers should not touch each other. There should be no more than 3.2 mm (1/8") difference between the horizontal and vertical alignment of the levers.

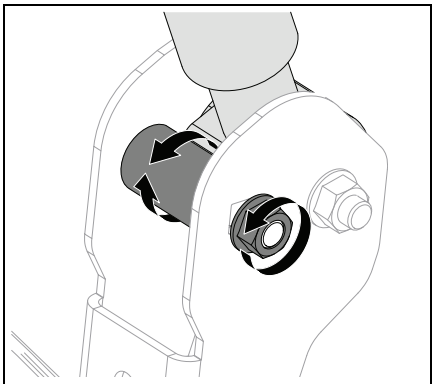

Figure 29

Align Steering Levers

If there is more than 3.2 mm (1/8") between the horizontal alignment of the steering levers, align the levers.

See Figure 30.

1. Loosen steering lever mounting hardware.
2. Place steering levers in desired position:
   - Gently push levers forward for greater distance from operator.
   - Gently pull levers back for closer distance to operator.
3. Tighten hardware.

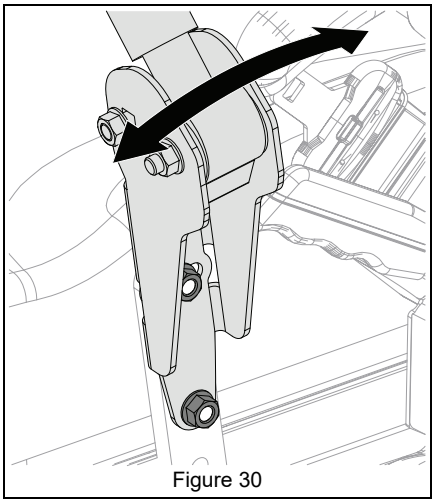

Figure 30

OPEN FUEL VALVE

See Figure 31.

- Turn fuel valve toward the left or right fuel tank to use fuel from that tank.
- Move valve to the off position when storing or transporting unit.

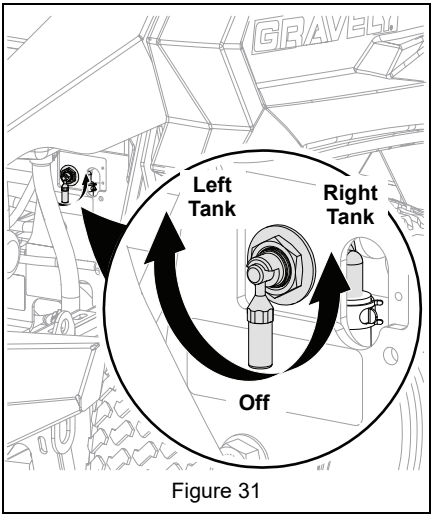

Figure 31

OPERATION

WARNING: AVOID INJURY. Read and understand the *Safety* section before proceeding.

IMPORTANT: All references to left, right, front or rear are given from the perspective of operator in operator's position, facing the direction of forward travel.

EMERGENCY STOPPING

WARNING: AVOID INJURY. Operating on slopes may lead to loss of steering control. Be prepared to react.

1. Place steering levers in neutral position and rotate outward.
2. Engage parking brake.
3. Push PTO switch down to off position.
4. Turn key to off position and remove from ignition.

START THE ENGINE

1. Move steering levers to neutral position.
2. Engage parking brake.
3. Push PTO switch down to off position.
4. Turn fuel valve to use fuel from desired tank.If engine is cold, move choke control lever to on position. DO NOT use choke on an engine that's warm from operation.
5. Move throttle control lever to 3/4 fast position.
6. Insert key into ignition.
7. Turn key to the start position and release after engine starts.

NOTICE: Do not operate the starter for more than 10 seconds per starting attempt. If the engine does not start, allow a 60-second cool down period between starting attempts.

8. If choke was used, gradually move choke control lever to the off position after engine starts.

IMPORTANT: Make sure choke is completely off. Engine will not run smoothly using partial choke.

OPERATE UNIT

1. Start the engine. See *Start The Engine* on page 22.
2. Release parking brake.
3. Set throttle control lever to fast position.

NOTICE: Engaging the PTO knob with the throttle lever set lower than fast position can cause excessive belt wear. ALWAYS use fast position when engaging the PTO.

4. Pull PTO switch up to on position.

NOTICE: Never engage the PTO if the mower is plugged with grass or other material. This may cause damage to the electric clutch.

WARNING: AVOID INJURY. Move the steering levers slowly and keep the throttle at slow speed until you learn how to operate the unit.

5. Move steering levers to begin mowing.

Direction of Travel	Lever Position	
Forward	Push both levers forward from neutral position.	
Reverse	Pull both levers backward from neutral position.	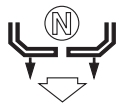
Right Turn	Push left lever farther forward than the right lever.	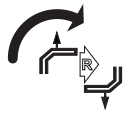
Left Turn	Push right lever farther forward than the left lever.	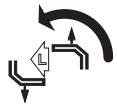
Stop	Return both levers to neutral position.	

This unit is equipped with a return-to-neutral feature that gradually and automatically returns the steering levers to neutral when released from a forward or reverse position.

IMPORTANT: Aggressive turning can scuff or damage lawns. Always keep both wheels rotating when making sharp turns. DO NOT make turns with inside wheel completely stopped. For minimum turning radius, slowly reverse inside wheel while moving outside wheel slowly forward.

STOP THE ENGINE

WARNING: AVOID INJURY. Wait for all moving parts to stop before leaving operator's position.

1. Move steering levers to the neutral position.
2. Engage parking brake.
3. Reduce throttle to 3/4 fast position.
4. Push PTO switch down to off position.
5. Move throttle control lever to slow position.
6. Turn key to off position and remove from ignition.

MOVE UNIT MANUALLY

Bypass the transaxles to move the unit with the engine off.

IMPORTANT: Transaxles are bypassed independently. Ensure both transaxles are either fully bypassed or fully engaged.

1. Stop engine, engage parking brake, and wait for all moving parts to stop and for hot parts to cool.
2. From under the unit, turn both transaxle bypass valves one-quarter turn with a flathead screwdriver or similar tool so the slot in the valve is vertical and in the bypass position. See Figure 32.

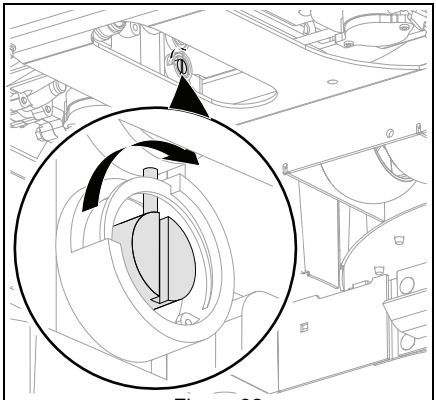

Figure 32

3. Release parking brake and push unit to desired location.
4. Engage parking brake.
5. Turn both transaxle bypass valves one-quarter turn with a flathead screwdriver or similar tool so the slot in the valve is horizontal and in the operating position. See Figure 33.

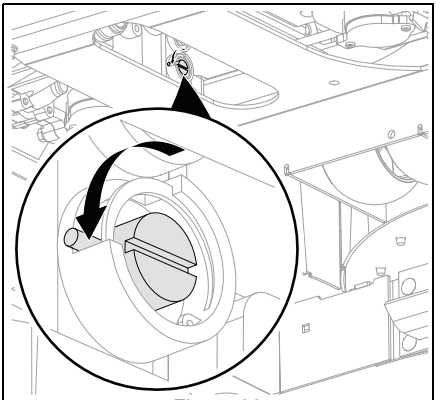

Figure 33

TRANSPORT UNIT

1. Push deck lift pedal completely forward to engage transport lock.
2. Move unit to transport vehicle.
3. Stop engine, engage parking brake, remove key from ignition and turn fuel valve to off position.
4. Secure mower frame to transport vehicle.

NOTICE: NEVER secure unit to vehicle from rods or linkages that could be damaged.

RELEASE TRANSPORT LOCK

See Figure 27.

1. Push deck-lift pedal slightly forward, and lift and hold transport lock release lever.
2. Slowly release deck-lift pedal until deck rests at its selected cutting height.
3. Release transport lock release lever.

MAINTENANCE

WARNING: AVOID INJURY. Read and understand the *Safety* section before proceeding.

Proper maintenance can prolong the life of unit. The *Maintenance Schedule on Page 24* shows the recommended service schedule.

Your Gravely dealer can provide service and adjustments to keep your unit operating at peak efficiency. Contact an authorized engine manufacturer's service center for engine service.

More frequent service may be required due to working conditions (heavy loads, high ambient temperatures, dusty conditions, or airborne debris).

See the maintenance instructions in the Engine Manual for additional information.

SERVICE POSITION

1. Park unit on a flat, level surface.
2. Engage parking brake and rotate steering levers outward.
3. Stop engine, remove key and wait for moving parts to stop and for hot parts to cool.
4. Chock wheels. Strap and clamp unit onto lift, if used.
5. Disconnect spark plug cables from engine.

If access under the seat is needed:

6. Pull seat latch release lever upward and rotate seat forward. See Figure 34.

CAUTION: AVOID INJURY. Seat assembly is heavy. Secure your footing to accommodate weight shift when rotating seat forward.

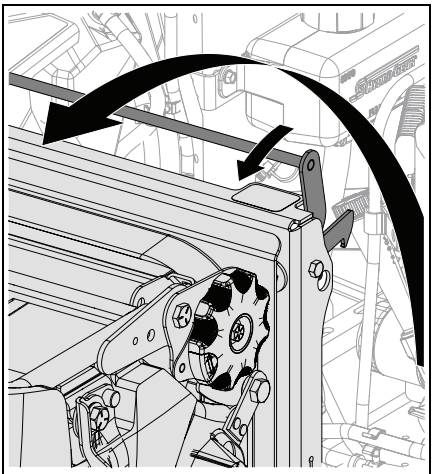

Figure 34

IMPORTANT: Reconnect spark plug wires after maintenance.

MAINTENANCE SCHEDULE

Service Performed	Each Use	Every 25 hrs.	Every 50 hrs.	Every 100 hrs.	Every 400 hrs.	Every 500 hrs.
Clean Engine of any Grass or Debris	•					
Clean Grass and Debris from Deck	•					
Inspect Belt Cover Grommets for Damage	•					
Check Safety Interlock System	•					
Check Hydraulic System	•					
Check Engine Oil *	•					
Change Engine Oil *						
Check Air Filter *	•					
Change Air Filter *						
Check Tire Pressure	•					
Check Mower Blades		•				
Lubricate Unit			•			
Check Parking Brake			•			
Clean Battery				•		
Clean Engine Cooling System *				•		

Service Performed	Each Use	Every 25 hrs.	Every 50 hrs.	Every 100 hrs.	Every 400 hrs.	Every 500 hrs.
Check Fasteners				•		
Check Belts				•		
Change Hydraulic Oil and Filter **					•	
Lubricate Caster Fork Bearings						•
Lubricate Caster Wheel Bearings						•

* Refer to engine manual for instructions.

** Change after first 75 hours of operation.

SERVICE PARTS

See your Gravely dealer to purchase service parts for your unit.

Description	Qty.	Part No.
Kawasaki FX Tune-Up Kit (Models 983001, 983002, 983017) • (2) 32 oz Bottles of 10W40 Engine Oil • (1) Oil Filter • (1) Fuel Filter • (1) Inner Air Filter • (1) Outer Air Filter • (2) Spark Plugs)	1	70721600
Kawasaki FX Tune-Up Kit (Models 983003, 983004) • (3) 32 oz bottles of 10W40 engine oil • (1) oil filter • (1) fuel filter • (1) inner air filter • (1) outer air filter • (2) spark plugs	1	70721900
Transaxle Drive Belt	1	07200937
PTO Belt (Engine to Deck)		
52"	1	07200939
60"	1	07201009
72"	1	07200940
Secondary Mower Belt		
52"	1	07200036
60"	1	07200038
72"	1	07200039
Mower Blade		
52"	1	00450300
60"	1	30125800
72"	1	04774600
Mulching Blade		
52"	1	04887600
60"	1	04887700
72"	1	04887800
Hydraulic Oil Filter	2	21548300
Hydraulic Oil and Filter Kit	1	59222800
Relay	1	04438400
24 x 12-12 Wheel & Tire Assembly	1	07101511
24 x 12-12 Tire Only	1	07101041
Spindle Assembly Replacement Kit	1	59409800
Spindle Bearing Replacement Kit (Includes 2 Bearings)	1	59408900
Fuel Stabilizer Packet (Treats 10 L (2.5 gal)).	1	00592900
Engine Air Filter (Outer)	1	21548800
Engine Air Filter (Inner)	1	21548700
Engine Oil Filter	1	21535800
Fuel Filter (Models 983001, 983002, 983017)	1	21538400
Fuel Filter (Models 983003, 983004)	1	21573800
Spark Plug	1	21536100
Muffler Gasket (Models 983001, 983002, 983017)	1	21550337
Muffler Gasket (Model 983003)	1	00191627
Muffler Gasket (Model 983004)	1	21500093

CLEAN MOWER DECK

Clean grass and debris from mower deck before each use.

1. Stop unit, engage parking brake, and wait for all moving parts to stop and for hot parts to cool.
2. Remove grass and debris from mower deck and around discharge opening.
3. Remove mower blades and remove grass and debris accumulation from inside the cutting chamber. See *Remove Blades* on page 28.

IMPORTANT: Grass accumulation and debris buildup inside the cutting chamber disrupts aerodynamics and can harbor bacteria and fungi. Clean regularly for best cut quality and to help prevent lawn disease spread.

CHECK SAFETY INTERLOCK SYSTEM

- With the parking brake engaged, the steering levers must be locked in neutral.
- With the parking brake disengaged, the engine must not start and the engine must stop if the operator lifts off the seat.

See *Before Operation* on page 17. If system does not operate correctly, see your Gravely dealer for repairs. DO NOT operate until repairs are made.

CHECK PARKING BRAKE

1. Stop engine, engage parking brake, remove key, and wait for moving parts to stop and for hot parts to cool.

See Figure 35.

IMPORTANT: Ensure parking brake is engaged when recording measurements.

2. Measure the compression spring length on the brake adjustment rods alongside each transaxle.
   - Compression spring length MUST be 3.86 – 4.01 cm (1.52 – 1.58").

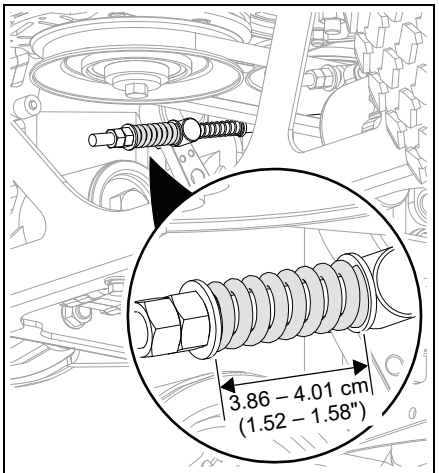

Figure 35

IMPORTANT: Check dimensions on both sides of unit.

- If measurements are outside specification, adjust parking brake. See *Adjust Parking Brake* on page 34.
- If measurements are within specification, no adjustment is needed.

CHECK HYDRAULIC SYSTEM

Check Hydraulic Oil Level

1. Stop engine, engage parking brake, remove key, and wait for moving parts to stop and for hot parts to cool.

IMPORTANT: Engine should be cold when checking initial oil level.

IMPORTANT: The unit is equipped with two hydraulic oil expansion tanks: one on each side of the frame near the engine.

See Figure 36.

2. Check oil level in expansion tanks. Oil should reach the cold fill line.

IMPORTANT: Cold fill line is near the bottom of the tank.

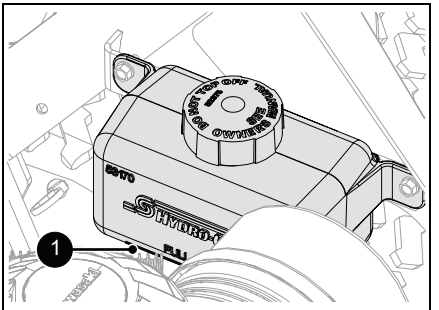

1. Cold Fill Line

Figure 36

3. Operate engine for 1 minute and recheck oil levels.
4. Add hydraulic oil, if needed.
   a. Remove expansion tank caps.
   b. Fill expansion tanks with 15W-50 synthetic motor oil (Gravely part number 00057100) or equivalent until oil reaches the cold fill line. See Figure 36.
   c. Reinstall expansion tank caps.

Change Hydraulic Oil and Filter

1. Operate unit for a few minutes to warm hydraulic oil.
2. Stop engine, engage parking brake, remove key, and wait for moving parts to stop and for hot parts to cool.
3. Remove hardware retaining transaxle skid plate and remove skid plate. See Figure 59.
4. Position container under transaxle oil filter to catch used oil.

See Figure 37.

5. Remove the oil filter cover from the transaxle and remove the o-ring from the cover. Retain cover; discard o-ring.
6. After oil has drained, remove oil filter and discard.

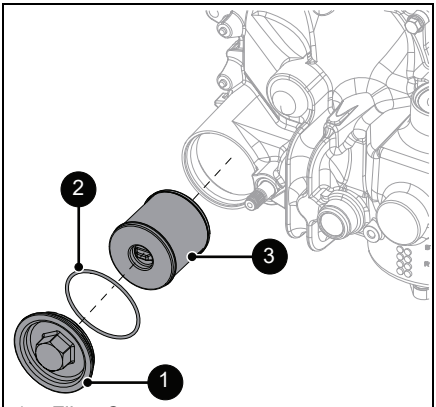

1. Filter Cover
2. O-Ring
3. Oil Filter

Figure 37

7. Install a new oil filter into the transaxle housing.
8. Install a new O-ring onto the oil filter cover and spin the filter cover onto the transaxle housing.

NOTICE: Avoid cross-threading filter cover. Cover should spin onto transaxle housing with little to no resistance to start.

9. Remove the top vent / fill plug. See Figure 38.

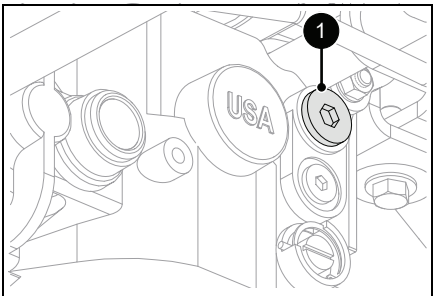

1. Vent / Fill Plug

Figure 38

10. Add 15W-50 synthetic motor oil or equivalent into the hydraulic oil expansion tank until oil appears at the bottom of the vent / fill port (4475 mL (151 fl. ounces) per transaxle).
11. Reinstall the vent / fill plug and torque to 22.6 N•m (16.7 lb-ft).
12. Continue adding hydraulic oil until oil reaches cold fill line on the expansion tank. See Figure 36.
13. Repeat steps 4 – 12 for other transaxle.
14. Purge hydraulic system. See *Purge Hydraulic System* on page 27.

Purge Hydraulic System

Purge air from hydraulic system after draining oil or changing the filter.

WARNING: AVOID INJURY. This adjustment requires operating the engine. Use extreme care to avoid contact with moving parts and hot surfaces. Be sure rear of unit is well supported and secure before starting engine.

1. Park unit facing a wall or chock wheels.
2. Support unit so drive wheels are off the ground.
3. Bypass transaxles. See *Move Unit Manually* on page 23.
4. Start the engine. See *Start The Engine* on page 22.
5. While in the operator's position, release the parking brake and slowly move steering levers forward and backward 5 or 6 times.
6. Stop the engine. See *Stop the Engine* on page 23.
7. Turn transaxle bypass valves to operating position. See *Move Unit Manually* on page 23.
8. Start the engine. See *Start The Engine* on page 22.
9. While in the operator's position, release the parking brake and slowly move steering levers forward and backward 5 or 6 times.
10. Stop engine, lower unit to ground and check oil level. Add oil if no oil is visible in the hydraulic oil expansion tanks.
11. Repeat steps 1 – 10 until transaxles operate smoothly in forward and reverse at normal speed without excessive noise.

12. Add hydraulic oil as needed after procedure is complete. See *Check Hydraulic Oil Level* on page 26.

CHECK TIRE PRESSURE

Check and adjust tire pressure. See *Specifications* on page 47.

WARNING: AVOID INJURY. Explosive separation of tire and rim parts is possible.

- DO NOT inflate tires above maximum pressure listed on tire sidewalls.
- DO NOT inflate tires with a compressor; use a hand pump.
- DO NOT stand in front of tire assembly when inflating. Use a clip-on chuck and extension hose long enough to allow you to stand to one side.
- DO NOT mount a tire without proper equipment and experience.

CHECK MOWER BELTS

Check mower belts for wear. Contact your Gravely dealer for replacements if you see:

- Cracks in the belt.
- Frayed edges or disconnected belt threads.
- Shiny or glazed areas.

CAUTION: Keep body parts away from idler when releasing spring tension.

CHECK MOWER BLADES

Check blades for wear. Replace or sharpen as needed.

CAUTION: AVOID INJURY. Use sturdy gloves or padding to protect hands when working with mower blades.

Rotation of one blade rotates the other blades.

Remove Blades

1. Stop engine, engage parking brake, remove key, and wait for moving parts to stop and for hot parts to cool.
2. Disconnect spark plug wires.

See Figure 39.

3. Remove hardware securing blades to spindles and remove blades. Retain all hardware for reinstallation.

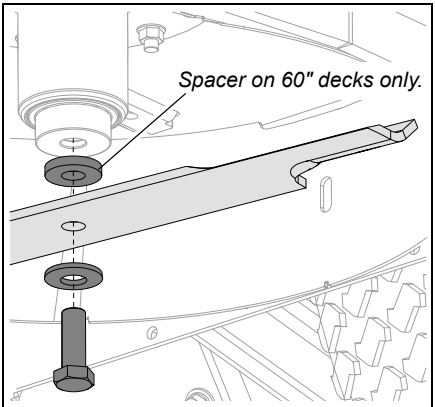

Figure 39

Sharpen Blades

CAUTION: DO NOT sharpen blades while attached to unit.

1. Remove blades. Discard blades if:
   - More than 1.3 cm (1/2") of metal is removed.
   - Air lifts are eroded.
   - Blades are bent or broken.
2. File or grind an equal amount of metal from each cutting edge of the blade until sharp. DO NOT change angle of cutting edge or round the corner of the blade. See Figure 40.

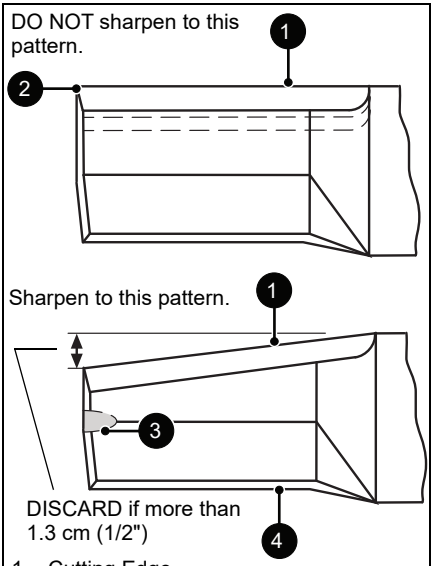

1. Cutting Edge
2. Square Corner
3. Air Lift Erosion
4. Air Lift

Figure 40

CAUTION: Unbalanced blades cause excessive vibration and eventual damage to unit. Balance blades before reinstalling on unit.

NEVER weld or straighten blades.

3. Check blade balance by sliding an unthreaded bolt through center hole. Hold the bolt level. If blade does not remain horizontal, sharpen the heavy end until blade is balanced.

Install Blades

See Figure 39.

1. Reinstall blades and secure with original hardware. Torque to 156 – 217 N•m (115 – 160 lb-ft).

IMPORTANT: Reinstall Belleville washer with concave (cupped) side against blade.

2. Reconnect spark plug wires.

CLEAN BATTERY

WARNING: AVOID INJURY. Battery posts, terminals and related accessories contain lead and lead compounds, chemicals known to the State of California to cause cancer and reproductive harm. Wash hands after handling.

Remove Battery

See Figure 41.

1. Place unit in service position and rotate seat forward. See *Service Position* on page 24.
2. Disconnect the negative cable and then the positive cable from battery.
3. Remove wing knobs securing battery retainer and remove retainer.
4. Remove battery.

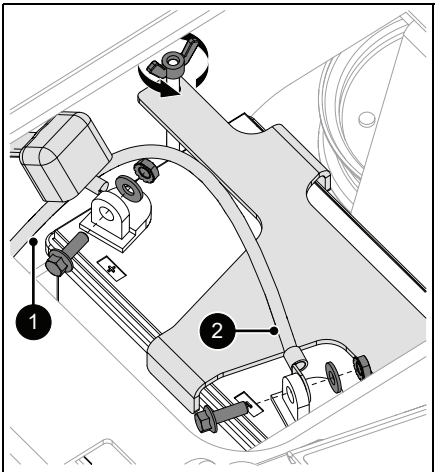

1. Positive Battery Cable
2. Negative Battery Cable

Figure 41

Clean Battery

1. Clean terminals and battery cable ends with a wire brush.
2. Coat terminals with dielectric grease or petroleum jelly.

Install Battery

1. Install battery and secure with battery retainer and wing knobs.
2. Reconnect positive cable and then the negative cable.
3. Place boot over positive terminal.

4. Return seat to operating position.

CHARGE BATTERY

Check battery with a voltmeter. If battery is less than 11 volts, charge battery.

NOTICE: DO NOT fast charge. Charging at a higher rate damages or destroys battery. ONLY use an automatic charger designed for use with your battery.

NOTICE: Always follow information provided on battery by battery manufacturer. Contact battery manufacturer for details regarding charging.

1. Remove battery from unit. See *Remove Battery* on page 29.
2. Place battery on bench in a well-ventilated area.
3. Connect positive lead of charger to positive terminal.
4. Connect negative lead of charger to negative terminal.
5. Charge battery following battery manufacturer's instructions.
6. Reinstall battery. See *Install Battery* on page 29.

Jump Starting

Gravely does not recommend jump starting your unit. Jump starting can damage engine and system components. Refer to engine manual for details.

CHECK FASTENERS

Check for loose or missing hardware and tighten or replace if necessary.

LUBRICATE UNIT

1. Apply oil to all pivot points and pin connections.
2. Pump grease into grease fittings on caster wheels and caster forks.

Lubricate Caster Fork Bearings

See Figure 42.

1. Stop engine, engage parking brake, remove key, and wait for moving parts to stop and for hot parts to cool.
2. Remove dust cap.
3. Pump grease into the fitting until grease appears at the top of the upper bearing.

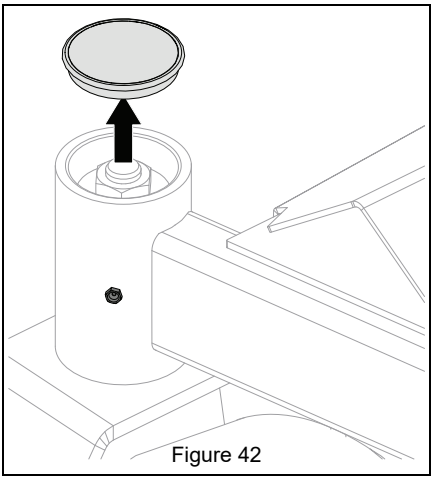

Figure 42

4. Reinstall dust cap.

Lubricate Caster Wheel Bearings

1. Stop engine, engage parking brake, remove key, and wait for moving parts to stop and for hot parts to cool.
2. Support unit so front wheels are off the ground.
3. Remove wheel from fork.

See Figure 43.

4. Remove end caps from wheel hub.
5. Pump grease into fitting until grease squeezes through the seal in the wheel hub.
6. Wipe away excess grease.
7. Reinstall end caps onto wheel hub.
8. Reinstall wheel into fork and lower unit to ground.

IMPORTANT: After tightening bolt, tire should not have any side-to-side play. Tighten bolt until there is a slight amount of drag on the wheel bearing. The wheel should not spin freely.

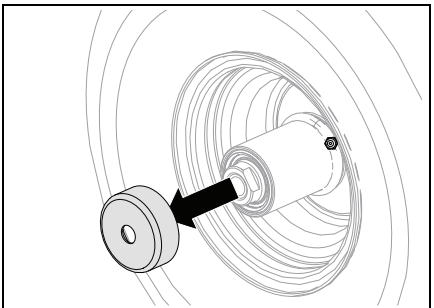

Figure 43

SERVICE & ADJUSTMENTS

WARNING: AVOID INJURY. Read and understand the *Safety* section before proceeding.

ELECTRICAL SERVICE

See Figure 44.

Replace Fuse

IMPORTANT: To avoid damaging the circuit, replace fuses with fuses of the same amperage rating. Determine the cause of electrical failure and repair before replacing failed electrical components.

1. Place unit in service position. See *Service Position* on page 24.
2. Remove fuse box cover.
3. Remove defective fuse.
4. Determine cause of fuse failure and repair condition.
5. Install new fuse.
6. Reinstall fuse box cover. Ensure cover snaps tightly in position.

Replace Relay

NOTICE: Relays are interchangeable. Use only quality replacement parts. See *Service Parts* on page 25.

1. Place unit in service position. See *Service Position* on page 24.
2. Remove fuse box cover.
3. Remove defective relay.
4. Determine cause of relay failure and repair condition.
5. Install new relay.
6. Reinstall fuse box cover. Ensure cover snaps tightly in position.

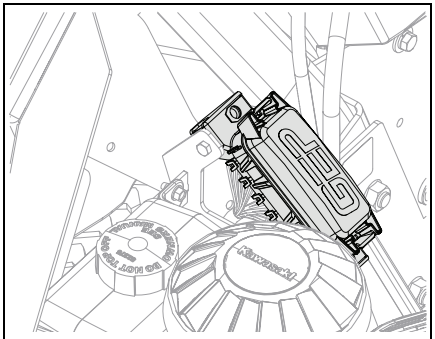

Figure 44

ADJUST UNIT TO DRIVE STRAIGHT

Adjust Tire Pressures

1. Stop engine, engage parking brake, remove key, and wait for moving parts to stop and for hot parts to cool.
2. Check rear tire pressures and adjust so both tire pressures are equal, if necessary.

IMPORTANT: DO NOT exceed maximum tire pressure listed on tire sidewalls. See *Check Tire Pressure* on page 28.

3. Check tracking:
   - If unit drives in a straight line, no further adjustment is needed.
   - If unit does not drive in a straight line, adjust limiter bolts. See *Adjust Speed Limiter Bolts* on page 31.

Adjust Speed Limiter Bolts

Limiter bolts can be adjusted to fine-tune the range of steering lever travel and correct forward and reverse tracking if the unit doesn't drive in a straight line.

See Figure 45.

To adjust forward tracking:

1. Loosen the jam nut on the front limiter bolt.
   - Loosen limiter bolt to increase maximum drive wheel speed on that side.
   - Tighten limiter bolt to reduce maximum drive wheel speed on that side.
2. Adjust the limiter bolt on the remaining side, as needed.

IMPORTANT: If tracking is corrected by adjusting one limiter bolt, remaining limiter bolt doesn't need adjustment.

3. Tighten jam nut(s).

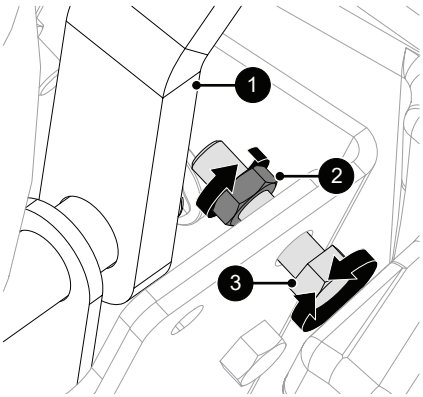

1. Steering Lever
2. Jam Nut
3. Limiter Bolt

Figure 45

See Figure 46.

To adjust reverse tracking:

1. Loosen the jam nut on the rear limiter bolt.
   - Loosen limiter bolt to increase maximum reverse drive wheel speed on that side.
   - Tighten limiter bolt to reduce maximum reverse drive wheel speed on that side.
2. Adjust the limiter bolt on the remaining side, as needed.

IMPORTANT: If tracking is corrected by adjusting one limiter bolt, remaining limiter bolt doesn't need adjustment.

3. Tighten jam nut(s).

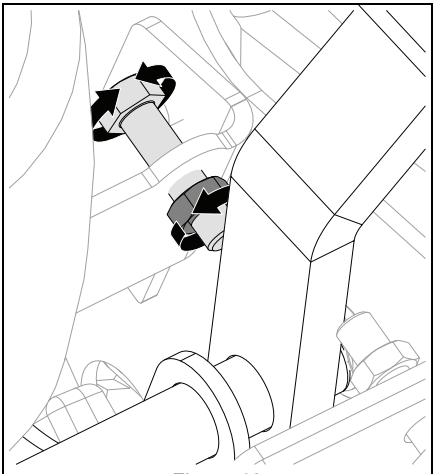

Figure 46

NOTICE: The limiter bolts prevent excessive and damaging input to the transaxles. DO NOT eliminate limitation of the steering lever travel range; steering lever MUST contact limiter bolt when lever is pushed completely forward or backward. See *Specifications* on page 47 for maximum forward and reverse speeds.

4. Align steering levers, if necessary. See *Align Steering Levers* on page 21.

ADJUST TRANSAXLES

Check For Excessive Creep

WARNING: AVOID INJURY. This adjustment requires operating the engine. Use extreme care to avoid contact with moving parts and hot surfaces. Be sure rear of unit is well supported and secure before starting engine. DO NOT engage PTO.

1. Operate unit for a minimum of 5 minutes to warm hydraulic system.
2. Stop engine and engage parking brake.
3. Chock front wheels and support unit so both drive wheels are off the ground.
4. Remove drive wheels.

IMPORTANT: Engine will stop if there's no operator in the seat when the parking brake is released in the next step. Enlist help from a qualified adult to complete steps 5 – 7.

5. ***Operator in seat:*** Start engine, move throttle lever to fast position and release parking brake.
6. ***Operator in seat:*** Move steering levers forward and backward 5 or 6 times and then return levers to neutral position.
7. ***Technician:*** Check hubs for rotation.
   - If hubs don't rotate, stop engine, reinstall wheels and lower unit to ground.
   - If hubs rotate, adjust neutral. See *Adjust Hydraulic Neutral* on page 33, then *Adjust Mechanical Neutral on Page 33.*

IMPORTANT: Torque wheel lug nuts to 81.3 – 122.0 N•m (60 – 90 lb-ft).

Adjust Hydraulic Neutral

WARNING: AVOID INJURY. This adjustment requires operating the engine. Use extreme care to avoid contact with moving parts and hot surfaces. Be sure rear of unit is well supported and secure before starting engine.

IMPORTANT: If wheel hub rotates after checking for excessive creep, adjust hydraulic neutral first, then adjust mechanical neutral.

IMPORTANT: Complete adjustment on both transaxles.

1. Stop engine, engage parking brake, remove key, and wait for moving parts to stop and for hot parts to cool.
2. Chock front wheels.
3. Support unit so both drive wheels are off the ground.
4. Remove drive wheels.
5. Loosen the neutral set screw on the transaxle. See Figure 47.

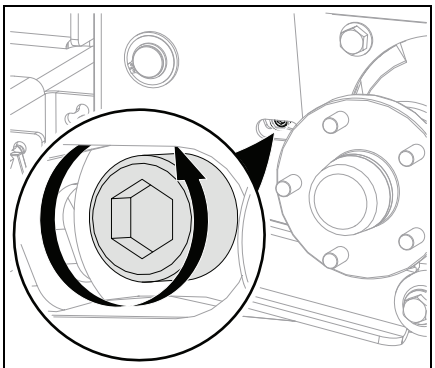

Figure 47

IMPORTANT: Engine will stop if there's no operator in the seat when the parking brake is released in the next step. Enlist help from a qualified adult to complete steps 6 – 10.

6. ***Operator in seat:*** Start engine, move throttle lever to fast position and release parking brake.
7. ***Technician:*** Slowly move steering lever in the opposite direction of hub rotation until hub stops **and hold steering lever position.**
8. ***Technician:*** Tighten the neutral set screw.
9. ***Operator in seat:*** Move steering levers forward and backward 5 or 6 times and then return levers to their neutral positions.
10. ***Technician:*** Check wheel hubs for rotation.
    - If hubs don't rotate, stop engine, reinstall wheels and lower unit to ground.
    - If hubs rotate, repeat steps 5 – 10.

IMPORTANT: Torque wheel lug nuts to 81.3 – 122.0 N•m (60 – 90 lb-ft).

11. Adjust mechanical neutral. See *Adjust Mechanical Neutral* on page 33.

Adjust Mechanical Neutral

If the steering levers move significantly and / or if the transaxle whines when the parking brake is engaged, it indicates the parking brake is interfering with the neutral positions of the steering levers and transaxles.

IMPORTANT: Complete adjustment on both sides of unit.

1. Adjust hydraulic neutral if procedure not already completed. See *Adjust Hydraulic Neutral* on page 33.
2. Place unit in service position, rotating seat forward. See *Service Position* on page 24.
3. Chock wheels and release parking brake.
4. Loosen the hardware retaining the eccentric spacers to the steering levers. See Figure 48.

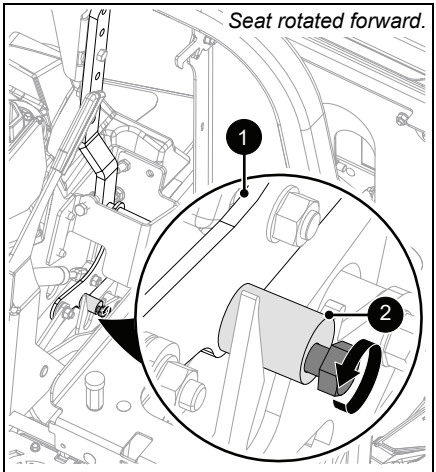

1. Steering Lever
2. Eccentric Spacer

Figure 48

See Figure 49.

5. Engage parking brake and allow the. eccentric spacers to seat themselves in the parking brake interlock.
6. Tighten eccentric spacer hardware.

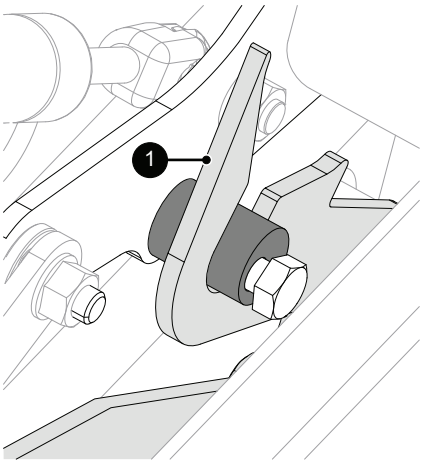

1. Parking Brake Interlock

Figure 49

7. Align steering levers, if necessary. See *Align Steering Levers* on page 21.

ADJUST PARKING BRAKE

IMPORTANT: Parking brake is adjustable on both sides of unit; adjust both sides to specification.

1. Stop engine, engage parking brake, remove key, and wait for moving parts to stop and for hot parts to cool.

See Figure 50.

2. Loosen rear jam nut on each parking brake rod.
3. Tighten or loosen stop nut until spring measures 3.86 – 4.01 cm (1.52 – 1.58").

IMPORTANT: Ensure parking brake is engaged when recording measurements.

4. Tighten jam nuts against stop nuts.

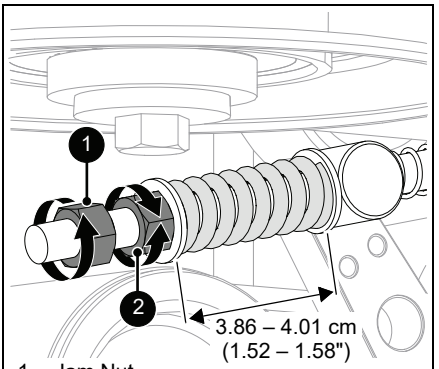

1. Jam Nut
2. Stop Nut

Figure 50

REPLACE MOWER BELTS

CAUTION: Damaged or worn belts may result in injury and / or damage to the unit. Check belts for excessive wear or cracks often.

Remove PTO Belt

1. Stop engine, engage parking brake, remove key, and wait for moving parts to stop and for hot parts to cool.
2. Position mower deck at lowest cutting height.
3. Move seat to rearmost position.
4. Rotate deck access panel upward, then lower slightly to lock in detent. See Figure 51.

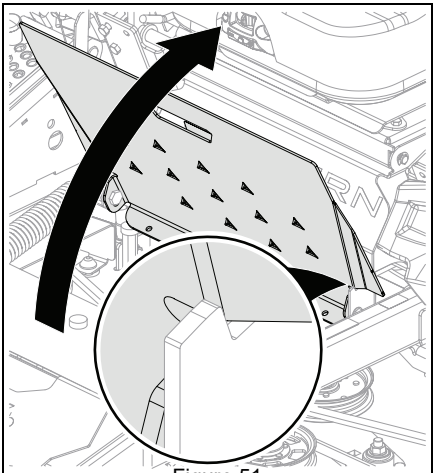

Figure 51

5. Remove belt covers.

CAUTION: Use care when releasing idler spring tension. Keep body parts away from idlers when performing this operation.

6. Slowly remove spring hook from anchor bolt to release tension from belt idler. See Figure 52.

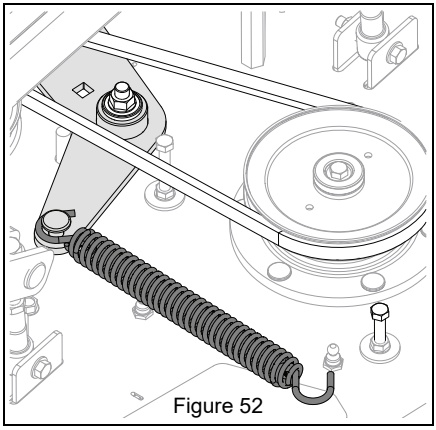

Figure 52

7. Remove belt retainer bolt from PTO idler arm. See Figure 53.

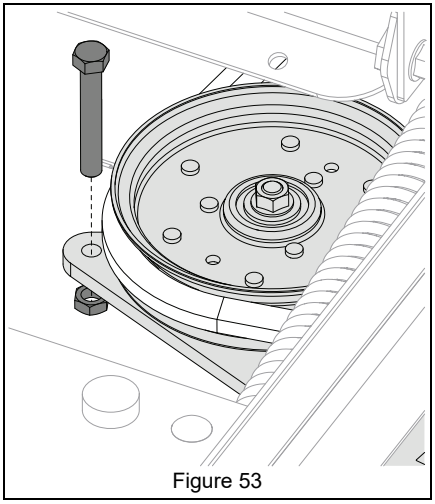

Figure 53

8. Remove PTO belt from pulleys and clutch at the rear of the unit.

Remove Secondary Mower Belt

See Figure 54.

1. Stop engine, engage parking brake, remove key, and wait for moving parts to stop and for hot parts to cool.
2. Remove PTO belt. See *Remove PTO Belt* on page 34.

CAUTION: Use care when releasing idler spring tension. Keep body parts away from idlers when performing this operation.

3. Slowly remove spring hook from anchor bolt to release tension from belt idler.
4. Remove secondary mower belt.

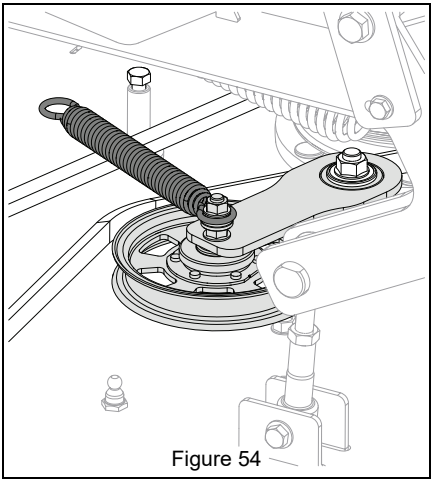

Figure 54

Install Secondary Mower Belt

See Figure 55.

1. Install secondary mower belt around bottom tracks of center spindle pulley and right spindle pulley.
2. Align belt with idler pulley.

IMPORTANT: Secondary mower belt is a V-belt. Install belt with narrow edge around spindle pulleys and wide edge against idler pulley.

3. Reinstall idler spring hook around anchor bolt to apply belt tension.

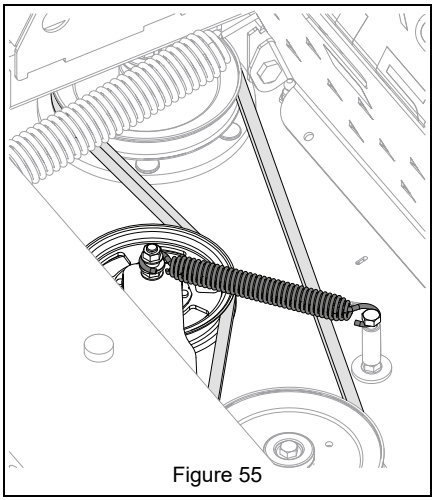

Figure 55

IMPORTANT: Ensure belt is without twists, has tension, and is aligned in all pulleys.

Install PTO Belt

IMPORTANT: Secondary mower belt MUST be installed before PTO belt. See *Install Secondary Mower Belt* on page 35.

See Figure 56.

1. Install PTO belt around top track of center spindle pulley and around left spindle pulley.
   Align belt with idler pulleys.

IMPORTANT: PTO belt is a V-belt. Install belt with narrow edge around spindle pulleys and with wide edge against idler pulleys.

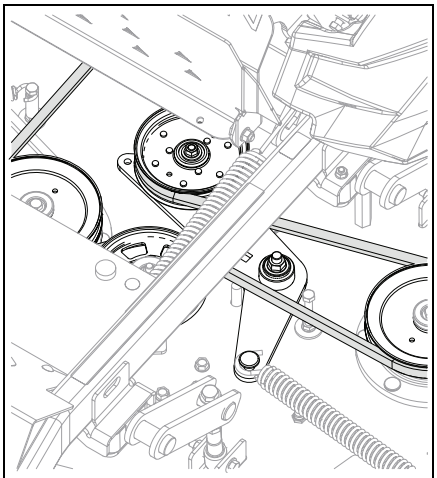

Figure 56

2. Install PTO belt around clutch at rear of unit.
3. Reinstall idler spring hook around anchor bolt to apply tension to belt. See Figure 57.

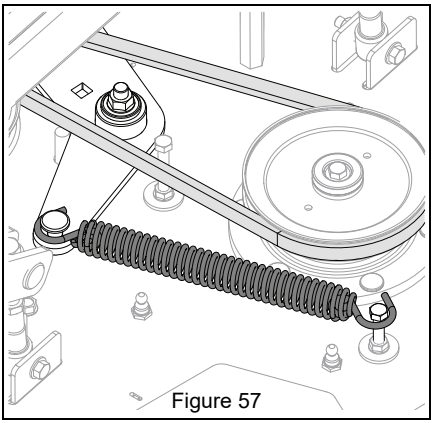

Figure 57

IMPORTANT: Ensure belt is without twists, has tension, and is aligned in all pulleys. See Figure 58.

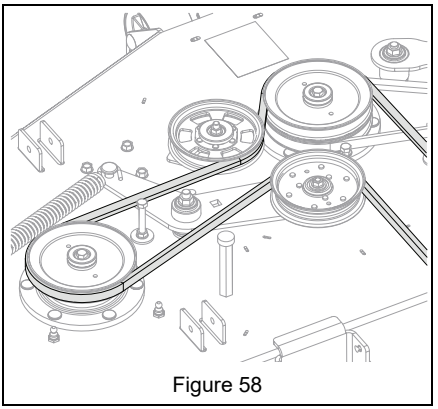

Figure 58

4. Secure original belt retainer bolt to PTO idler arm. See Figure 53.
5. Reinstall belt covers and close deck access panel.

REPLACE TRANSAXLE DRIVE BELT

Remove Transaxle Drive Belt

1. Stop engine, engage parking brake, remove key, and wait for moving parts to stop and for hot parts to cool.
2. Release tension from PTO belt so it can be removed from clutch. See *Remove PTO Belt* on page 34.
3. Remove hardware retaining transaxle skid plate and remove skid plate. See Figure 59.

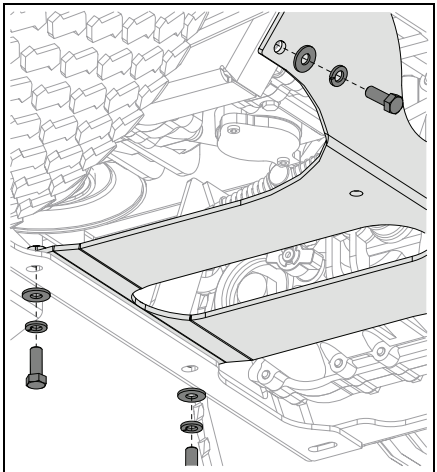

Figure 59

CAUTION: Use care when releasing idler spring tension. Keep body parts away from idlers when performing this operation.

4. Remove transaxle idler spring hook from anchor bolt to release belt tension. See Figure 60.

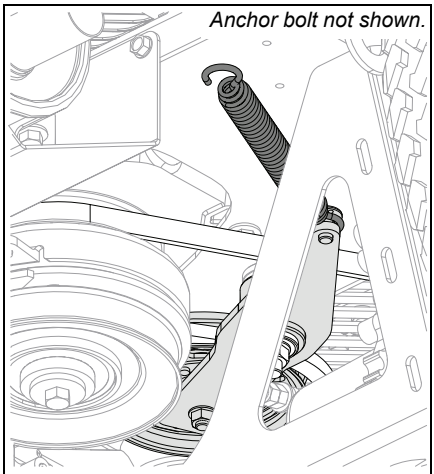

Figure 60

See Figure 61.

5. Disconnect clutch breakaway wire harness from clutch.
6. Remove hardware securing clutch stop bracket to frame and remove bracket.

IMPORTANT: DO NOT cut cable tie retaining clutch wire harness to clutch stop bracket.

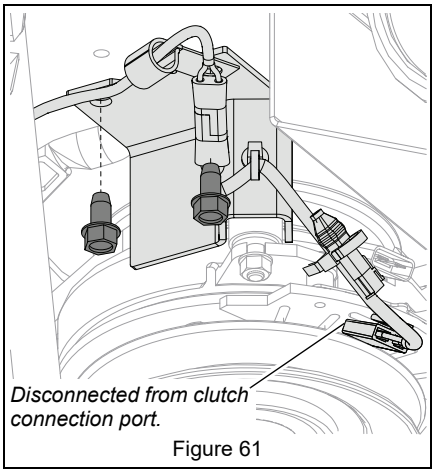

Figure 61

7. Remove transaxle drive belt.

Install Transaxle Drive Belt

See Figure 62.

1. Install transaxle drive belt around engine and transaxle pulleys.
2. Align belt with idler pulley.

IMPORTANT: Transaxle drive belt is a V-belt. Install belt with narrow edge around transaxle and engine pulleys and with wide edge against idler pulley.

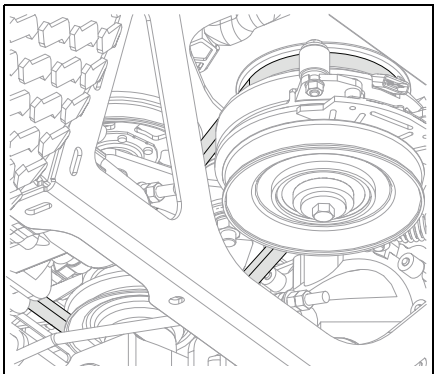

Figure 62

3. Reinstall transaxle idler spring hook around anchor bolt to apply tension to belt. See Figure 63.

IMPORTANT: Ensure belt is without twists, has tension, and is aligned in all pulleys.

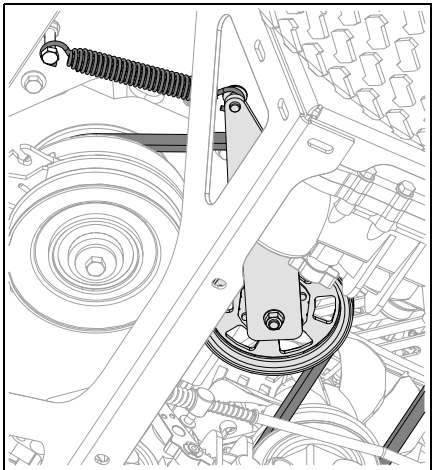

Figure 63

4. Reinstall clutch stop bracket and secure with original hardware. See Figure 61.
5. Reconnect clutch breakaway wire harness to clutch.
6. Reinstall PTO belt around clutch and reapply tension to belt. See *Install PTO Belt* on page 36.
7. Reinstall transaxle skid plate and secure with original hardware. See Figure 59.

ADJUST ANTI-SCALP WHEELS

See Figure 64.

The anti-scalp wheels are set at the factory for typical mowing height, but can be adjusted for high or low cutting conditions.

1. Stop engine, engage parking brake, remove key, and wait for moving parts to stop and for hot parts to cool.
2. Remove hardware retaining anti-scalp wheels and remove wheels.
3. Position anti-scalp wheels as necessary:
   - For a very high cutting height, position wheels in the lower setting.
   - For a very low cutting height, position wheels in the higher setting.

IMPORTANT: All anti-scalp wheels MUST be set to the same height.

4. Secure anti-scalp wheels with original hardware.

IMPORTANT: Maintain hardware orientations; nut must be reinstalled on the side from which it was removed.

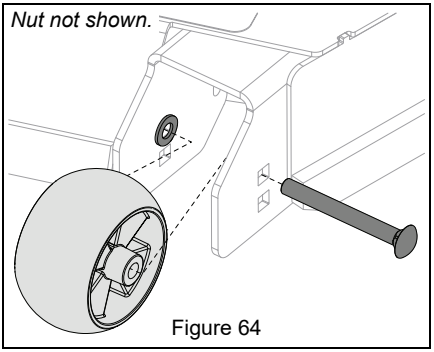

Figure 64

REMOVE AND INSTALL MOWER DECK

Remove Deck

1. Stop engine, engage parking brake, remove key, and wait for moving parts to stop and for hot parts to cool.
2. Release tension from PTO belt so it can be removed from clutch. See *Remove PTO Belt* on page 34.
3. Push deck lift pedal completely forward to engage transport lock. See *Transport Lock* on page 16.

WARNING: AVOID INJURY. Mower lift arms and lift pedal could cause severe injury if the lift-assist springs are not disconnected before the lift links.

WARNING: AVOID INJURY. Springs store energy. Keep body parts away from pinch points when removing the deck.

See Figure 65.

4. Loosen front jam nuts on deck lift-assist spring anchor bolts to release spring tension.
5. Slowly remove lift-assist spring hooks from anchor bolts.

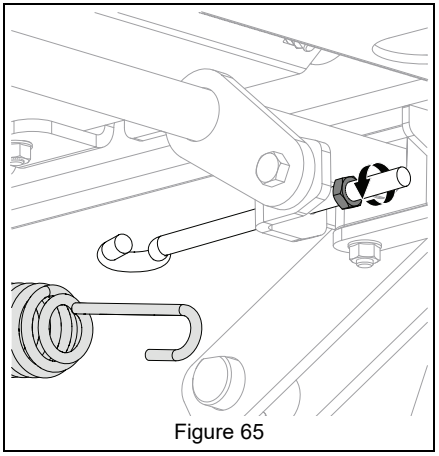

Figure 65

6. Position supports such as blocks or jack stands under each side of the deck.
7. Release transport lock and slowly lower deck until it rests on supports.

See Figure 66.

7. Remove hardware retaining deck-lift links to deck-lift brackets.
8. Remove hardware retaining mounting pins through deck stabilizer arms and remove pins.

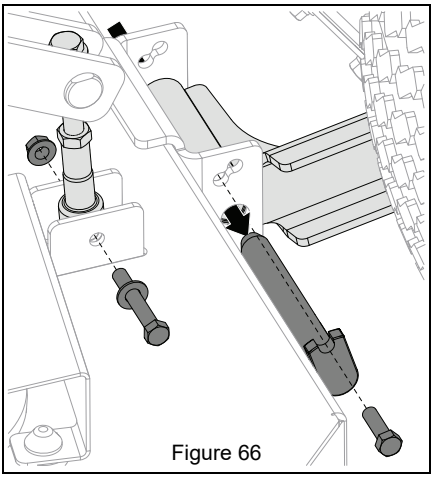

Figure 66

9. Remove deck from under unit.

Install Deck

1. Position deck under unit.
2. Secure deck stabilizer arms to deck with original mounting pins and hardware.
3. Secure deck-lift links to deck-lift brackets with original hardware.
4. Push deck lift pedal completely forward to engage transport lock.

See Figure 67.

5. Reinstall deck lift-assist spring hooks around anchor bolts.
6. Tighten lift-assist anchor bolt jam nuts against spring anchor brackets.

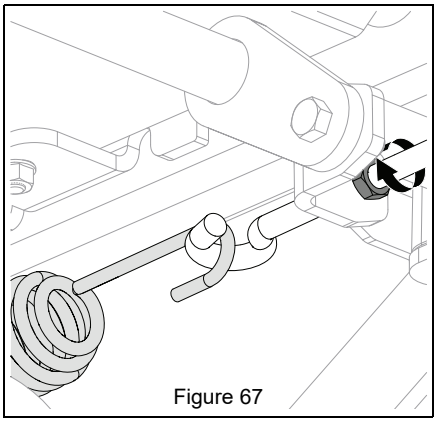

Figure 67

7. Reinstall PTO belt around clutch. See *Install PTO Belt* on page 36. See *Adjust Deck-Lift Assist* on page 40.
8. Adjust deck-lift assist. See *Adjust Deck-Lift Assist* on page 40.
9. Level and pitch mower deck. See *Level and Pitch Mower Deck* on page 41.

ADJUST DECK-LIFT ASSIST

The deck-lift assist springs on 52" and 60" decks can be adjusted to modify deck-lift assist and deck stability.

IMPORTANT: Deck-lift assist on models with 72" decks is NOT adjustable. There's ONLY one setting / specification on these models.

- Increased spring tension increases deck lift ease, but decreases deck stability.
- Decreased spring tension decreases deck lift ease, but increases deck stability.

1. Adjust mower deck to the 3.5" cutting height setting.
2. Loosen the rear jam nuts on the spring anchor bolts completely so nuts are at the end of the anchor bolt threads. See Figure 68.

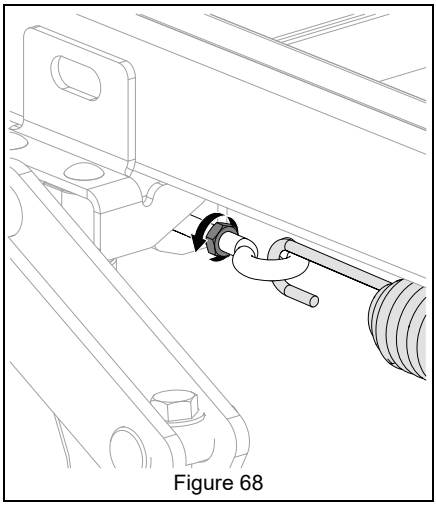

Figure 68

See Figure 69.

IMPORTANT: Adjust lift-assist springs equally.

3. ***72" decks:*** Adjust left assist springs to maximum spring extension by tightening the front jam nut completely.
   52" & 60" decks: Adjust lift assist springs equally on each side of deck.
   - **To increase lift assist** and decrease deck stability, tighten front jam nut.
   - **To decrease lift assist** and increase deck stability, loosen front jam nut.

IMPORTANT: Excessive spring tension on 52" and 60" decks increases the potential for deck to lift and bounce over rough terrain and affect cut quality.

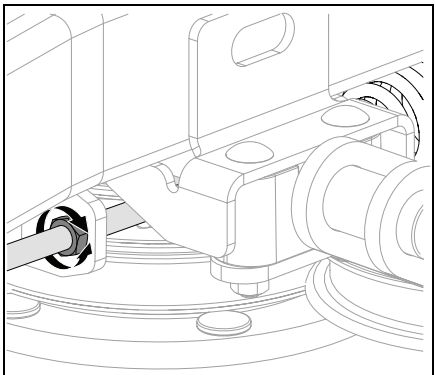

Figure 69

See Figure 70.

4. ***52" & 60" decks:*** Confirm lengths between the outer faces of the front jam nuts and the anchor bolt ends are 7.62 – 8.90 cm (3.0 – 3.5").

With deck set to 3.5" cutting height:

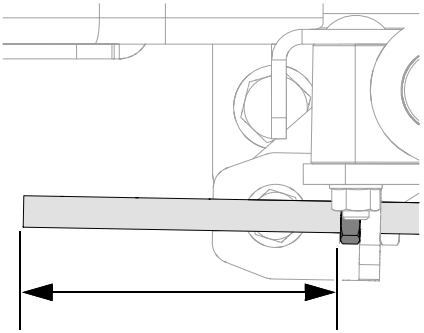

52" / 60" Deck: 7.62 – 8.90 cm (3.0 – 3.5").

72" Deck: No tolerance; spring is adjusted to maximum extension.

Figure 70

5. Tighten rear jam nuts against spring anchor brackets.

LEVEL AND PITCH MOWER DECK

IMPORTANT: Position unit on a flat, level surface and inflate tires to equal pressures before starting procedure.

Check Deck Level and Pitch

1. Stop engine, engage parking brake, remove key, and wait for moving parts to stop and for hot parts to cool.
2. Disconnect spark plug wires.
3. Adjust mower deck to the 3.5" cutting height setting.

See Figure 71.

CAUTION: AVOID INJURY. Use sturdy gloves or padding to protect hands when working with mower blades.

Rotation of one blade rotates the other blades.

4. Position mower blades so ends point left to right across the width of the deck.
5. Measure the distances between:
   - The surface on which you're working and the outer tip of the left blade.
   - The surface on which you're working and the outer tip of the right blade.

IMPORTANT: Distances should be within 4.7 mm (3/16").

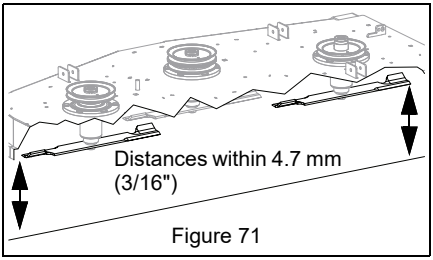

Figure 71

See Figure 72.

6. Position mower blades so ends point front to back.
7. Measure the distances between:
   - The surface on which you're working and the front tip of the center blade.
   - The surface on which you're working and the rear tips of the outer blades.

IMPORTANT: The distance between the front blade tip and the surface on which you're working should reflect your cutting height setting, and the distance between the rear blade tips and the surface on which you're working should be **3.2 – 6.4 mm (1/8 – 1/4") higher than the front blade tip.**

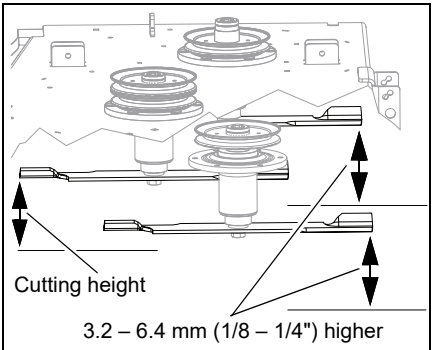

Figure 72

If measurements are out of range, adjust level and pitch. See *Adjust Deck Level and Pitch* on page 42.

Adjust Deck Level and Pitch

Level and pitch the mower deck using the height adjusters on each deck lift bracket.

TIP: Place supports under the mower deck's **rear edge** to support the deck and ease adjustment. DO NOT position supports under the reinforced leading edge at the front of the deck.

1. Stop engine, engage parking brake, remove key, and wait for moving parts to stop and for hot parts to cool.
2. Disconnect spark plug wires.

See Figure 73.

3. Loosen the jam nut on each adjustment bolt.
4. Raise and lower the deck at each adjustment point by turning adjustment bolts.
   - Turn bolts clockwise to raise.
   - Turn bolts counterclockwise to lower.

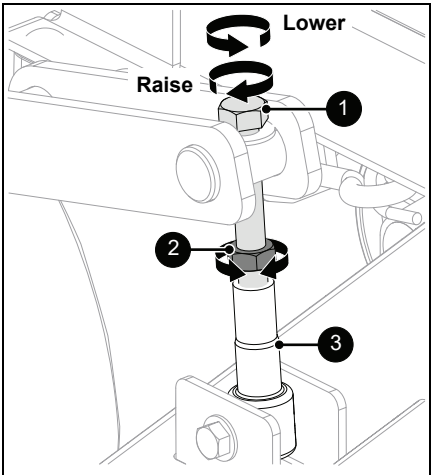

1. Adjustment Bolt
2. Jam Nut
3. Deck-Lift Link

Figure 73

5. Take measurements to verify level and pitch and continue adjustments as necessary. See *Check Deck Level and Pitch* on page 41.
6. Tighten jam nuts against deck-lift links when adjustment is complete.

TROUBLESHOOTING

Problem	Probable Cause	Correction
Engine does not start.	PTO switch is on.	Push PTO switch down to off position.
	Parking brake is released.	Engage parking brake.
	Parking brake switch is not engaged.	Ensure parking brake is fully engaged.
	Fuel tank is empty.	Fill fuel tank. See *Before Operation* on page 17.
	Fuel supply is contaminated.	Replace with clean fuel.
	Battery is discharged.	See *Charge Battery* on page 30.
	Battery cables are loose or corroded.	Clean and tighten cables. See *Clean Battery* on page 29.
	Spark plug wire(s) are loose or spark plug(s) are faulty.	Connect spark plug wire(s) or replace spark plug(s). Refer to engine manual.
	Electrical system is faulty.	Contact your Gravely dealer.
	Engine is faulty.	Contact your Gravely dealer.
Engine runs rough.	Choke is engaged.	Disengage choke. See *Choke Control Lever* on page 15.
	Spark plug is faulty.	Replace spark plug. Refer to engine manual.
	Fuel tank is near empty.	Fill the fuel tank. See *Before Operation* on page 17.
	Fuel filter is dirty.	Clean or replace filter. Refer to engine manual.
	Air filter is plugged.	Clean or replace air filter. Refer to engine manual.
	Engine is faulty.	Contact your Gravely dealer.
	Speed is excessive over uneven or rough terrain.	Drive slowly and take extra caution over rough terrain.
Engine overheats.	Engine oil level is low.	Add engine oil. Refer to engine manual.
	Engine cooling fins are plugged.	Clean fins. Refer to engine manual.
	Engine is faulty.	Contact your Gravely dealer.
Engine runs when ignition key is in the off position.	Ignition ground wire is disconnected.	Connect ground wire to clean, metal surface.
	Ignition switch is faulty.	See your Gravely dealer.
Unit does not drive.	Parking brake is engaged.	Release parking brake.
	Transaxles are bypassed.	Turn transaxle bypass valves to operating position. See *Move Unit Manually* on page 23.
	Transaxle drive belt is faulty.	See *Replace Transaxle Drive Belt* on page 37.
	Transaxles are faulty.	Contact your Gravely dealer.
	Transaxle drive system is faulty.	Contact your Gravely dealer.
	Hydraulic oil level is low.	See *Check Hydraulic System* on page 26.

TROUBLESHOOTING

Problem	Probable Cause	Correction
PTO does not work.	Operator presence control (OPC) switch is not engaged.	Sit on seat to activate switch.
	Operator presence switch (OPC) is faulty.	Contact your Gravely dealer.
	Deck-drive belts are faulty.	Replace PTO and/or secondary mower belt. See *Replace Mower Belts* on page 34.
	PTO switch, wiring, connectors or clutch are faulty.	Contact your Gravely dealer.
Unit moves with engine off and parking brake engaged.	Parking brake needs adjustment.	See *Check Parking Brake* on page 26.
	Parking brake is faulty.	Contact your Gravely dealer.
Unit does not drive straight.	Tire pressures are not equal.	Adjust tire pressures. See *Specifications* on page 47.
	Speed limiter bolts need adjustment.	See *Adjust Speed Limiter Bolts* on page 31.
	Steering levers need adjustment.	See *Adjust Steering Levers* on page 20.
Unit creeps when steering levers are in neutral position.	Transaxles need adjustment.	See *Adjust Hydraulic Neutral* on page 33.
	Parking brake interlock needs adjustment.	See *Adjust Mechanical Neutral* on page 33.
Unit has poor cutting quality.	Engine throttle is too low.	Move throttle control lever to the fast position.
	Deck is not level or pitch is incorrect.	See *Check Deck Level and Pitch* on page 41.
	Mower blades are dull or faulty.	Sharpen or replace mower blades. See *Check Mower Blades* on page 28.
	Mowing speed is too fast.	Drive slower when cutting grass.
	Belt tension or condition is poor.	Replace PTO belt or secondary mower belt. See *Replace Mower Belts* on page 34.
	Cutting height is too low.	Raise cutting height. For very tall grass, mow twice.
	Clutch is faulty, damaged, or slipping.	Contact your Gravely dealer.
Oil pressure light is illuminated.	Oil pressure is low.	Stop engine immediately and refer to engine service manual or see your Gravely dealer.

STORAGE



WARNING: AVOID INJURY. Read and understand the *Safety* section before proceeding.

SHORT-TERM STORAGE

IMPORTANT: NEVER wash unit with high-pressure water or store outdoors.

1. Allow unit to cool and clean with mild soap and water.
2. Tighten all hardware to correct specifications.
3. Inspect unit for visible signs of wear or damage. Repair as needed.
4. Prepare fuel system for storage.

NOTICE: Gravely recommends using a quality fuel stabilizer in all fuel. Gasoline left in the fuel system without a stabilizer, even for short periods of time, deteriorates and leaves gummy deposits in the system that may cause damage. For the best effectiveness, add stabilizer to all fuel containers whenever purchasing fuel. Add the stabilizer to the container before adding fuel.

   a. Add Gravely fuel stabilizer (see *Service Parts* on page 25) or equivalent according to manufacturer's instructions to the fuel tank and any fuel containers with remaining fuel.
   b. Operate engine outdoors for at least 5 minutes to allow stabilizer to reach the carburetor.

5. Close fuel valve and allow engine to stop on its own.
6. Turn key to off position and remove from ignition.
7. Store unit in a cool, dry, protected area. DO NOT store unit outdoors.

LONG TERM STORAGE

1. Perform short-term storage procedures.
2. Lubricate as directed in *Maintenance* on page 24.
3. Touch-up all scratched painted surfaces.
4. Remove and charge battery as directed in *Charge Battery* on page 30. Store battery in a cool, dry, protected area.
5. Store unit in a cool, dry, protected area. DO NOT store unit outdoors.

START-OF-SEASON PREPARATION

1. Before adding fuel for the first time after long-term storage, add fresh, stabilizer-treated fuel to fuel tank and any fuel containers with remaining fuel.
2. Charge and install the battery.

ACCESSORIES

See your Gravely dealer for a complete list of compatible accessories and attachments for your unit.

Description	Part Number
LaserEdge Mower Blade Kit	
For 52" decks	79219300
For 60" decks	79219400
For 72" decks	79219500
LaserEdge Mulch Blade Kit	
For 52" decks	79219900
For 60" decks	79220000
For 72" decks	79220100
Grass Mulching Kit (Includes Mulch Blades)	
For 52" decks	79220200
For 60" decks	79220300
For 72" decks	79405100
Gravely Seat Cover	71515500
Camouflage Seat Cover	71515100
Gravely Mower Cover *(Fits models with 52" & 60" decks only)*	71515300
Entry Assist Handle Kit	71801200
Backpack Sprayer	72702900
Front 6" Wheel Covers (Set of 2)	79210600
Trailer Hitch	79215800
Hard Top Sunshade Kit	79218000
Rear Tweel Kit	79220500

Electric Deck Lift Kit	78300100
Air Ride Seat Kit	78300300
LED Headlight Kit	79220900
Lawn Striping Kit	79221800
15" Front Caster Tweel Kit (Set of 2)	79223600
Operator-Controlled Discharge Baffle Kit	79223700
52" & 60" Side Grass Catcher Kit	79404800
3-Bag Bagger*	88300100
Dump-from-Seat Bagger*	88300200
• Completion Kit for 52" Decks	79224900
• Completion Kit for 60" Decks	79225000
• Completion Kit for 72" Decks	79225100

***Bagger kits are ordered in two parts:** a main bagger kit and a completion kit matching the unit's deck size. Both parts are required for a complete kit.

SPECIFICATIONS			
Model Number	**983001**	**983002**	**983003**
Description	Pro-Turn 472	Pro-Turn 460	Pro-Turn 452
Engine	Kawasaki FX921		Kawasaki FX850
Displacement – cm^3 (in^3)	999 (61)		852 (52)
Maximum RPM – No Load	3600 ±100		3650 ±100
Oil Capacity	Refer to engine manual.		
Liquid or Air Cooled	Air		
Electrical			
Starter	Electric		
Battery	12-Volt Maintenance-Free, 300 CCA 10U1L		
PTO (Power Take-off)	Electric PTO Clutch / Brake		
Fuel			
Tank Capacity – liter (gal)	47.9 (12.7)		
Type	Refer to engine manual.		
Transmission			
Type	Hydrostatic Drive		
Oil	Use 15W-50 synthetic motor oil (Gravely p/n 00057100) or equivalent		
Hydraulic Oil Filter	Yes		
Drive Speed			
Forward Maximum – km/h (mph)	20.8 (13.0)		
Reverse Maximum – km/h (mph)	9.6 (6.0)		
Turning Radius	Zero		
Brakes	Parking		
Mower Deck			
Cutting Height – cm (in)	2.5 – 13.3 (1 – 5.25)		
Cutting Height Increments – cm (in)	0.635 (0.25)		
Cutting Width – cm (in)	183.0 (72.0)	152.4 (60.0)	132.1 (52)
Deck Lift	Mechanical Pin Lock		
Size and Weight			
Length – cm (in)	218.4 (86.0)	212.1 (83.5)	
Width – cm (in) • Discharge Chute Down • Discharge Chute Up	 220.0 (86.6) 192.8 (75.9)	 189.7 (74.7) 160.0 (63.0)	 170.7 (67.2) 141.2 (55.6)
Height – cm (in) • with ROPS extended • with ROPS folded	 184.9 (72.8) 129.0 (50.8)		
Weight – kg (lb)	617.8 (1362)	653.2 (1440)	616.0 (1358)
Tires			
Front Tire Size – in	15 x 6-6 (Semi-Pneumatic)		
Rear Tire Size – in	24 x 12-12		
Recommended Rear Tire Pressure – kPa (psi)	83 – 103 (12 – 15)		

SPECIFICATIONS

Model Number	983004	983017
Description	Pro-Turn 460	Pro-Turn 460 Tweel
Engine	Kawasaki FX781	Kawasaki FX921
Displacement – cm^3 (in^3)	822 (50.2)	999 (61)
Maximum RPM – No Load	3600 ±100	
Oil Capacity	Refer to engine manual.	
Liquid or Air Cooled	Air	
Electrical		
Starter	Electric	
Battery	12-Volt Maintenance-Free, 300 CCA 10U1L	
PTO (Power Take-off)	Electric PTO Clutch / Brake	
Fuel		
Tank Capacity – liter (gal)	47.9 (12.7)	
Type	Refer to engine manual.	
Transmission		
Type	Hydrostatic Drive	
Oil	Use 15W-50 synthetic motor oil (Gravely p/n 00057100) or equivalent	
Hydraulic Oil Filter	Yes	
Drive Speed		
Forward Maximum – km/h (mph)	20.8 (13.0)	
Reverse Maximum – km/h (mph)	9.6 (6.0)	
Turning Radius	Zero	
Brakes	Parking	
Mower Deck		
Cutting Height – cm (in)	2.5 – 13.3 (1 – 5.25)	
Cutting Height Increments – cm (in)	0.635 (0.25)	
Cutting Width – cm (in)	152.4 (60.0)	
Deck Lift	Mechanical Pin Lock	
Size and Weight		
Length – cm (in)	212.1 (83.5)	
Width – cm (in) • Discharge Chute Down • Discharge Chute Up	 189.7 (74.7) 160.0 (63.0)	
Height – cm (in) • with ROPS extended • with ROPS folded	 184.9 (72.8) 129.0 (50.8)	
Weight – kg (lb)	639.1 (1409)	675.9 (1490)
Tires		
Front Tire Size – in	15 x 6-6 (Semi-Pneumatic)	
Rear Tire Size – in	24 x 12-12	
Recommended Rear Tire Pressure – kPa (psi)	83 – 103 (12 – 15)	N/A

NON-STANDARD TORQUE VALUES			
Component	Torque **(lb-in)**	Torque **(lb-ft)**	Torque **(N•m)**
Clutch to crankshaft	552 – 732	46 – 61	62 – 83
Engine to frame	240 – 312	20 – 26	27 – 35
Lug nuts to wheel hub	720 – 1080	60 – 90	81 – 122
Spindle to deck	168 – 372	14 – 31	20 – 42
Pulley to spindle	492 – 588	41 – 49	56 – 66
Blade to spindle	1380 – 1920	115 – 160	156 – 217
Fuel tank to frame	108 – 156	9 – 13	12 – 18
Transaxle to frame	1140 – 1380	95 – 115	129 – 156
Deck stabilizer arms to frame	960 – 1272	80 – 106	108 – 144
ROPS posts to frame	360 – 744	30 – 62	41 – 84
ROPS hoop to ROPS posts	240	20	27
Oil drain hose to engine	324 – 372	27 – 31	37 – 42
Parking brake interlock eccentric spacer bolt to lower control arm	108 – 228	9 – 19	12 – 26
Parking brake linkage to transaxle	264 – 372	22 – 31	30 – 42
Upper control arm to lower control arm	180 – 372	15 – 31	20 – 42
Seat frame to unit frame	276 – 324	23 – 27	31 – 37
Skid plate to frame	324 – 384	27 – 32	37 – 43

Outdoor Power Equipment Limited Warranty

AriensCo warrants to the original purchaser that Gravely brand products purchased on or after 09/01/2026 will be free from defects in material and workmanship for the time period noted in the chart below.

If any product, EXCEPT AXIS skidsteer, is rented or leased, then the duration of these warranties shall be 90 days after the date of purchase.

An authorized Gravely dealer will repair any defect in material or workmanship, and repair or replace any defective part, subject to the conditions, limitations and exclusions set forth herein. Such repair or replacement will be free of charge (labor and parts) to the original purchaser; except as noted below. Pick-up and delivery are at the owner's expense.

Warranty coverage between models in the same product family can vary.
Refer to the warranty code printed on your unit's model and serial number decal for your unit's warranty coverage, not the product family designation. Refer to the Operator's Manual for your unit's model and serial number decal location.

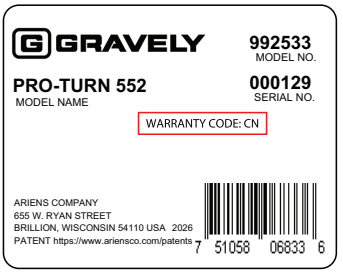

Warranty Code	Product Family	Warranty Period
AA	Serialized Attachments	1 Year.
AB	Serialized Attachments	2 Years.
CH	Pro-Turn® Z and Pro-Turn ZX	4 Years or 750 Hours.*
CK	Compact-Pro® and Pro-Walk® Hydro	4 Years or 750 Hours.* No Hour Limit for First 2 Years.
CL	Pro-Turn 100 and Pro-Stance®	5 Years or 1000 Hours.* No Hour Limit for First 2 Years.
CM	Pro-Turn 200 and 300	5 Years or 1250 Hours.* No Hour Limit for First 2 Years.
CN	Pro-Turn 500, 600, MACH ONE and Pro-Stance Ultra	5 Years or 1500 Hours.* No Hour Limit for First 2 Years.
CS	AXIS®	1 Year or 1000 Hours.* Includes Rented or Leased Products.
CT	OVIS and OVIS-X	2 Years or 250 Hours.*
CU	Pro-Turn 200 and 400	5 Years or 1250 Hours.* No Hour Limit for First 2 Years.
CV	Pro-Turn 400X, 600, and MACH ONE	5 Years or 1500 Hours.* No Hour Limit for First 2 Years.
HE	ZT	2 Years or 150 Hours.*
HF	ZT X	3 Years or 300 Hours.*
HG	ZT XL	4 Years or 400 Hours.*
HH	ZT HD and Z-Stance	4 Years or 500 Hours.*
UG	Atlas JSV®	1 Year.

* Whichever comes first.

Special Extensions

The chart below details special **extensions** to warranty terms. Warranty terms are total time periods covered. If any product is rented or leased, there are no extensions to the 90-day warranty.

Warranty Code	Warranty Term Extension	Warranty Period	Detail
CL, CM, CN, CU, CV	Mower Deck Shell and Main Frame	Lifetime Limited.	Warranty is for parts only after the initial warranty period. Components are covered for manufacturer's defect only, not wear.

Exclusions and Limitations

The charts below detail special **exclusions and limitations** to this warranty.

Warranty Term Exclusions	Warranty Period
Including, but not limited to air filters, brake arms, brake linings, brake shoes, brushes, cutters, fuel filters, halogen headlights, halogen light bulbs, lubricants, mower blades, flail blades, oil, oil filters, spark plugs, scraper blades, shear bolts, skid shoes and spoon tines.	Components are not covered under warranty.

Warranty Term Limitations	Warranty Period
Battery	Battery warranty is one year. Units used for rental or lease have no exceptions to the 90-day warranty. Total battery claim reimbursement will not exceed $65.00 USD.
Belts and Tires	180 days or 250 hours (whichever comes first).
Cloth, Plastic, and Rubber Components. Mufflers.	Components are covered for manufacturer's defect only, not wear.

Exclusions – Items Not Covered by This Warranty

- Non-genuine Gravely service parts are not covered by this warranty and may void the warranty if their use results in premature wear or damage to the product.
- Damages resulting from the installation or use of any part, accessory, or attachment which is not approved by the AriensCo for use with product(s) identified herein are not covered by this warranty.
- Any misuse, alteration, improper assembly, improper adjustment, neglect, or accident which requires repair is not covered by this warranty.
- Repairs or adjustments required due to failure to use fresh fuel or failure to properly prepare the unit for periods of non-use.
- **Use of gasoline blends exceeding 10% ethanol voids any and all warranties.**
- **Any tampering with the hour meter voids any and all warranties.**
- Products are designed to the specifications in the area that the product was originally distributed. Different areas may have significantly different legal and design requirements. This warranty is limited to the requirements in the area in which the unit was originally distributed. AriensCo does not warrant this product to the requirements of any other area. Warranty service is limited to service within the area originally distributed.
- In countries other than the United States and Canada, contact the AriensCo dealer for warranty policies that govern within your country. Rights may vary from country to country and within any one country.

Evaporative Emissions Control Warranty Exception

As required by the California Air Resources Board (CARB) and the US Environmental Protection Agency (EPA) the evaporative emissions control system is warranted to the ultimate purchaser, and any subsequent owner, for two years.

The CARB and EPA evaporative emissions control system warranty is described in a separate evaporative emission control warranty statement.

Special Exclusions for Job-site Vehicles

The following uses void the warranty terms on Atlas JSV (Warranty Code UG) vehicles:

- Renting or leasing the vehicle.
- Using the vehicle to tow or carry loads in excess of the limits specified in the operator's manual.
- Modifying the vehicle with parts and accessories that are not genuine or authorized Gravely parts or accessories.
- Modifying the vehicle without express written authorization from Gravely.

- Operating the vehicle when it has not been completely and properly assembled and pre-delivered by an authorized Gravely dealer.

Transmissions

The charts below detail transmission warranty information. Transmission warranty terms may vary from the specific terms of this warranty. If inconsistent, the terms of the transmission warranty shall apply to the transmission and its component parts.

Transmission Manufacturer	Detail
Hydro-Gear Transaxle	For products with a warranty code other than CU or CV, refer to the Hydro-Gear warranty on www.Gravely.com for your unit's transaxle warranty coverage. The warranty is administrated by AriensCo. Refer to page 50 for a list of warranty codes, how to identify your unit's warranty code, and the coverage period of each warranty code.
Parker Hannifin Drive & Valve Systems	Parker Transaxles, Pumps, Wheel Motors and Valves are warranted for the length of equipment warranty period. Refer to Warranty Code chart above. Warranty is administered by AriensCo.

Warranty Code	Detail
CU, CV	Products with these warranty codes feature a transaxle warranty coverage period matching the unit's warranty coverage period. The warranty is administered by AriensCo. Refer to page 1 for a list of warranty codes, how to identify your unit's warranty code, and the coverage period of each warranty code.

Engines

Engine warranty terms may vary from the specific terms of this warranty. If inconsistent, the terms of the engine warranty shall apply to the engine and its component parts. Engines are covered by the engine manufacturer's warranty. Refer to the engine manufacturer's warranty statements.

Parts and Accessories

Service replacement parts and non-serialized accessories are warranted for 90 days from date of purchase. Labor is not included.

Customer Responsibilities

Register the product immediately at the time of sale. If the dealer does not register the product, the customer must register the unit at www.gravely.com. Customer is required to present proof of purchase to validate unit is within its warranty period.

To obtain warranty service, the **original purchaser** must:

- Complete maintenance and adjustments explained in the Operator's Manual.
- Promptly notify AriensCo or an authorized Gravely service representative of the need for warranty service.
- Transport the product to and from the place of warranty service at owner's expense.
- Have the warranty service performed by an authorized Gravely service representative.

To find an authorized dealer use the dealer locator on our websites, or contact us by mail or phone.

Globally except Australia or New Zealand:	Australia:	New Zealand:
AriensCo 655 W. Ryan Street Brillion, WI 54110 Phone: (920) 756 - 4688 www.gravely.com	Roy Gripske & Sons Pty Ltd 11 Sodium Street Narangba Queensland 4504 Australia Phone: (61130) 036 3004 www.rgs.com.au	Masport Ltd 320 Ti Rakau Drive East Tamaki Auckland 2013 New Zealand Phone: 0800 627 7678 www.masport.co.nz

Disclaimer

AriensCo may from time to time change the design of its products. Nothing contained in this warranty shall be construed as obligating the AriensCo to incorporate such design changes into previously manufactured products, nor shall such changes be construed as an admission that previous designs were defective.

Limitation of Remedy and Damages

AriensCo liability under this warranty, and under any implied warranty that may exist, is limited to repair of any defect in workmanship, and repair or replacement of any defective part. AriensCo shall not be liable for incidental, special, or consequential damages (including lost profits). Some states do not allow the exclusion of incidental or consequential damages, so the above limitation or exclusion may not apply to you.

AriensCo shall not be held liable for damages, including premature wear and tear, or injuries caused by installation of unauthorized parts and accessories or for parts and accessories not installed by an authorized Gravely dealer.

Australian Consumer Law

The following applies solely to warranties subject to Subsection 102(1) of the Australian Consumer Law: Our goods come with guarantees that cannot be excluded by the Australian Consumer Law. You are entitled to a replacement or refund for a major failure and for compensation for any other reasonably foreseeable loss or damage. You are also entitled to have the goods repaired or replaced if the goods fail to be of acceptable quality and failure does not amount to a major failure.

Disclaimer of Further Warranty

AriensCo makes no warranty, express or implied, other than what is expressly made in this warranty. If the law of your state provides that an implied warranty of merchantability, or an implied warranty of fitness for particular purpose, or any other implied warranty, applies to AriensCo then any such implied warranty is limited to the duration of this warranty. Some states do not allow limitations on how long an implied warranty lasts, so the above limitation may not apply to you.

This warranty gives you specific legal rights, and you may also have other rights which vary from region to region.

GRAVELY

655 West Ryan St.
Brillion, WI 54110

www.gravely.com

See parts, accessories, and attachments for your unit at parts.gravely.com.

A parts manual for your unit is available for free download or purchase at gravely.com.

WARNING: Cancer and Reproductive Harm - www.P65Warnings.ca.gov

ARIENS|CO