OVIS-X 40 RC

Operator's Manual

GRAVELY

Model

949002 - OVIS-X 40 RC
(SN 000101 +)

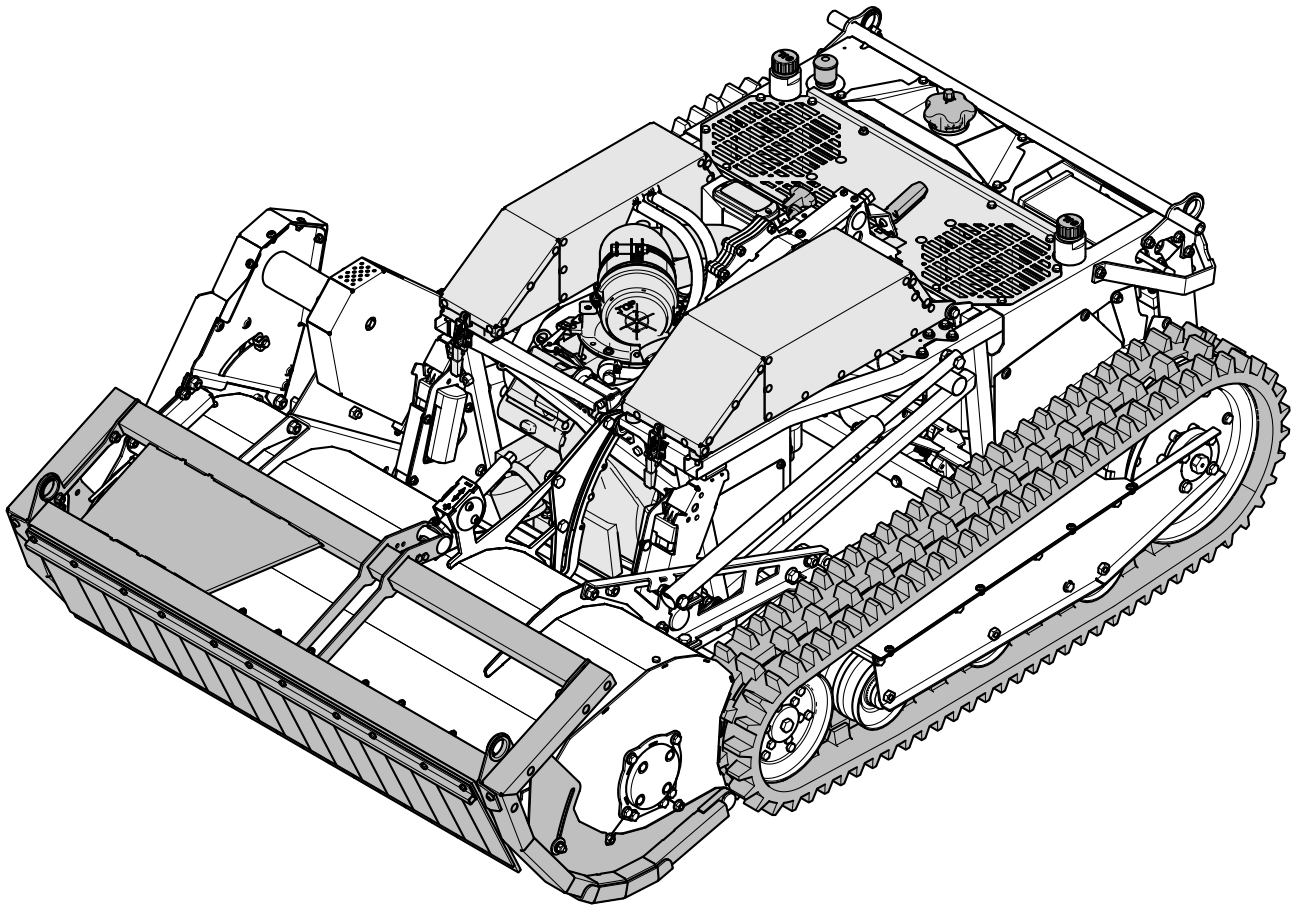

E10 E15 E20 E85

EN ENGLISH

30365300 • 04/26
Printed in Germany

Contents

Welcome ... 3
Register your product! ... 3
Manuals ... 3
Disclaimer ... 3
Explanation of the symbols ... 4
Symbols in the instructions ... 4
Warnings ... 4
Signs on the device ... 4
Safety instructions ... 6
Get informed! ... 6
User restrictions and hours of operation ... 6
Safe handling of fuel ... 6
Check the device prior to use ... 6
Use caution during operation ... 7
Prior to mowing ... 8
Danger area ... 8
Driving on slopes ... 9
Increased risk of tipping with additional load ... 10
Caution when using accessories ... 10
Risk of injury due to unauthorised use ... 10
When work is completed ... 11
Use caution during maintenance and repair ... 11
Controls and Features ... 12
Control elements on the device ... 13
Control elements on the transmitter ... 14
Display on the Remote Control Transmitter ... 15
More elements on the Remote Control Transmitter ... 15
Elements on the receiver ... 16
Optical signals ... 16
Status indicators on the device ... 16
Acoustic signals ... 16
Signals of the device ... 16
Safety functions ... 16
Information on mowing ... 17
Prior to starting ... 17
Checking the oil level ... 17
Fuel ... 17
Adding fuel ... 17
Carrying the Remote Control Transmitter ... 18
Checking and changing the battery of the transmitter ... 18
Adjusting the skid plates ... 18
Adjusting cutting height ... 19
Switching on receiver and transmitter ... 20
Selecting the radio channel ... 20
Training operation ... 20
Operating ... 21
Starting the engine ... 21
Driving ... 22
Driving on steep terrain ... 23
Setting the cutting height ... 23
Engaging blade ... 24
Moving blade to transport position ... 24
Switching off and parking ... 25
Emergency stop ... 25
Transport ... 26
Transport on pallets ... 26
Transport of ready-to-use device ... 27
Moving the device without drive ... 28
Lifting the device ... 28
Maintenance ... 29
Maintenance overview ... 30
Maintenance and cleaning position ... 32
Cleaning the device ... 32
General inspection ... 33
Check receiver and Remote Control Transmitter ... 33
Checking main switch ... 33
Checking the safety functions ... 34
Checking the RC functions ... 34
Checking the parking brake ... 36
Checking the blade and flail shaft ... 36
Checking the blade brake clutch ... 37
Checking tracks ... 38
Maintaining the engine ... 39
Checking the engine oil level ... 39
Check oil level of the gearbox ... 39
Maintaining the air filter ... 40
Checking and charging the battery ... 40
Hydrostat transmission ... 41
Grease lubrication ... 41
Assembly ... 42
Scope of delivery ... 42
Unpacking ... 42
Storage ... 42
Storing the device ... 42
Longer storage ... 43
Restarting ... 43
Spare parts ... 43
Wear parts ... 43
Disposal ... 43
Troubleshooting ... 44
Error codes ... 47
Technical specifications ... 48
Fuses ... 49
Accessories ... 50
Warranty ... 51

Welcome

Congratulations on your purchase and welcome to the Gravely family! Every machine in the Gravely lineup is designed for long-lasting and unsurpassed performance. We are confident your machine will be part of your family for many years to come.

Have Questions or Need Assistance?
www.gravely.com

A parts manual for your unit is available for free download or purchase at www.gravely.com.
Manual del operador español está disponible para su descarga gratuita o compra en www.gravely.com.

Register your product!

It is extremely important to register your product at time of purchase. Product registration activates the warranty and establishes a communication link from AriensCo.

Locate the model and serial number decal on your unit and register those numbers online at www.gravely.com. See Figure 1 for decal location. Be aware that the original selling dealer may have already completed product registration on behalf of the original purchaser.

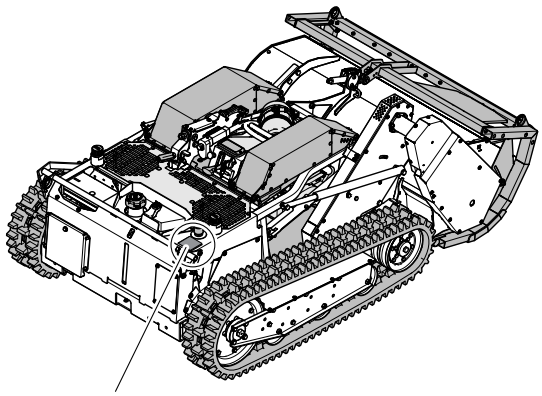

Figure 1: Model & Serial Number Decal.

Record model number here.

Record serial number here.

Manuals

Before operating or servicing the unit, carefully and completely read the manuals provided with the unit. They contain safety instructions and important information about unit controls.

The engine on this unit is covered by a separate manual. Refer to the engine manual for engine service recommendations. Contact the engine manufacturer for a replacement manual if necessary.

Your dealer must review important information in this manual with you before or upon delivery of the unit. It is your responsibility to read and understand all safety precautions and instructions in the manuals. If you do not understand or have difficulty following the instructions, contact your Gravely dealer for assistance. To locate your nearest Gravely dealer, go to www.gravely.com.

Disclaimer

Gravely reserves the right to discontinue, make changes to, and add improvements upon its products at any time without public notice or obligation. The descriptions and specifications contained in this manual were in effect at printing. Equipment described in this manual may be optional. Some illustrations may not be applicable to your unit.

Explanation of the symbols

Symbols in the instructions

The device is only as safe as its user. Carelessness, negligence or an operating error could result in severe injuries or death.

In these operating instructions, the following symbols are used to denote special dangers.



Warning.
These symbols denote special dangers.



Prohibition sign.
These symbols denote inadmissible procedures.



Directive sign.
These symbols denote required protective measures.

Symbols in the text

1. A numbered text requests you to act or shows a process sequence.
   ⇨ An indented arrow marks the result of a step.

⇨ An arrow that is not indented refers to the result of a sequence of actions.

Notice: An additional piece of information is marked by the word "Notice" written in bold letters.

Warnings

In these operating instructions, warnings are marked with signal word and colors. The signal words and colors out used to point to following hazards and potential consequences.

Danger

Imminent danger

Indicates an imminently hazardous situation with a **high level of** risk that, if not avoided, **will** result in death or severe injury.

Warning

Hazardous situation

Indicates a possibly hazardous situation with a **medium level of** risk that, if not avoided, **could** result in death or (severe) injury.

Caution

Hazardous situation

Indicates a possibly hazardous situation with a **low level of** risk that, if not avoided, **could** result in minor or moderate injury.

Notice

Danger of property damage

Indicates a possible risk of damage of the device and its surroundings.

Signs on the device

The following signs are attached to the device to provide a reminder that during use of the device, you will have to be careful and attentive:

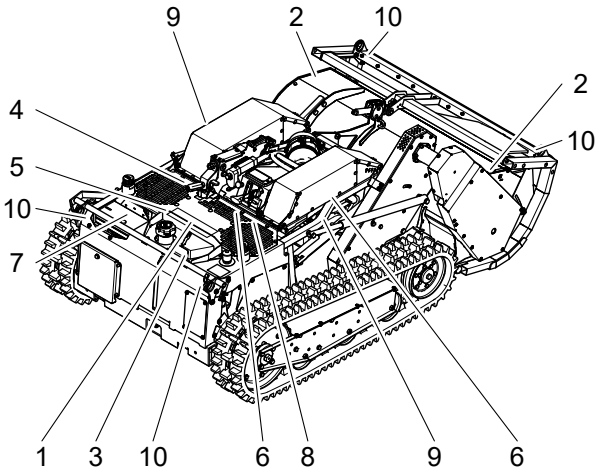

1



These operating instructions contain important information to help you avoid hazards and to increase the reliability and the life span of the device.
Read the operator's manual before using the device.



Danger of tipping when driving uphill and downhill!
Observe the safety instructions, especially those regarding the "Danger zone" and "Driving on slopes".



Danger of tipping when driving crosswise to the slope!
Observe the safety instructions, especially those regarding the "Danger zone" and "Driving on slopes".



Danger to life!
On slopes, the device can topple over and slide towards you or run you over.
Never stay below the device when on a slope.
Observe the safety instructions, especially those regarding the “Danger zone” and “Driving on slopes”.



Prior to repair and maintenance work, pull off the key.

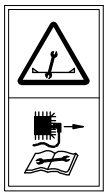

Prior to any repair and maintenance work, pull off the spark plug connector.

2



Risk of injury!
Make sure that no one is within the danger zone of the device. Objects may be ejected.

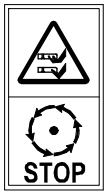

The quickly rotating blade can cause life threatening injuries or immense property damage! Be especially careful to keep your hands and feet away from the blade when the device is put into operation.

3



Overfilling may cause severe damage to evaporative system.
NEVER fill fuel tank when engine is running, hot, or unit is indoors.
Replace fuel cap securely and clean up spilled fuel.



No smoking.

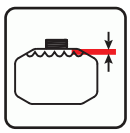

Fill fuel tank to bottom of filler neck – MAXIMUM.

4



Clean ventilation grid!
Blocked ventilation grids can lead to overheating or fire hazards. Always keep ventilation grids free of dirt.

5



Noise is causing health problems. Use personal ear protection to avoid hearing damage. Wear safety glasses.

6



Hot surface. Parts of the device may become hot during operation, e.g. the engine, exhaust, transmission and adjacent components. Do not touch hot parts. You can get burnt.

7



Do not clean the device with water spray or high-pressure cleaner!

8



Check the engine oil level! Before and after each use, check the engine oil level.

9



There is a designated lifting point for the device in the immediate vicinity of the label.
Observe the instructions in chapter “Transport”.

10

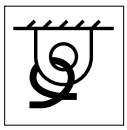

There is a designated tie down point for the device in the immediate vicinity of the label.
Observe the instructions in chapter “Transport”.

Safety instructions

Get informed!

For your safety, read these operating instructions carefully. Familiarize yourself with the control elements and the proper use of the device. Failure to observe the safety information and instructions can result in serious injuries or fatal accidents. Share these operating instructions with other users of the device.

Before starting to work: Have skilled personnel show you the safe handling of the device.

Get familiar with the device in a wide, open and flat terrain first.

User restrictions and hours of operation

Never allow children or persons who are not familiar with the operator's manual to use the device. Persons under 18 years of age may operate the device only under proper supervision. Local regulations determine the minimum age of the operator and the operating times.

Unsuitable for operation of the device are persons who

– are under the influence of alcohol, drugs or reaction delaying medications.

– have physical and mental/emotional impairments.

– are tired or sick.



Persons with pace makers must not touch live parts of the ignition system.

Safe handling of fuel

Fuel is toxic and highly flammable. There is a burn and explosion hazard!

Keep fuel away from ignition sources and do not smoke during handling.

Do not inhale fuel vapors, they are dangerous to your health.

Use gloves and avoid skin contact with the fuel.

Always refuel outdoors when the engine is cold and stopped completely. When doing so, always use a filler spout or a funnel.

Do not spill any fuel or do not let fuel enter canalisation or drain away.

When fuel has overflown or leaked, do not start the device until the fuel vapors have evaporated (wipe dry). Move the device away from the spilled fuel.

Always close the tank cap tightly and do not open it while the engine is running or the device is still hot.

Empty the fuel only when outdoors. Use the approved container for this or run the fuel tank empty.

Store the fuel away from children and keep it in a suitable container in a dark, cool and dry place.

Never store the device when there is fuel in the tank inside a building where fuel vapors might come into contact with open fire or sparks.

Immediately replace the fuel tank or tank cap if they are damaged (authorized service center).

First aid

When swallowing fuel or inhaling fuel vapors, do not force vomiting and immediately consult a doctor.

In case of skin contact, immediately wash with water and soap. Change your soiled clothing as soon as you can.

Measures in case of a fire

In case of a fire, use foam, dry powder extinguisher, or carbon dioxide (CO_2). Never douse with water!

Check the device prior to use

To ensure safe operation and to avoid hazards, injuries and damage, check the device before each use.

Visually check that the blade, protection skirt, impact protection, covers, ejection rubber, drive and fastening parts, cables and cable connections are in perfect condition and firmly seated.

Never use the device if covers, impact protection, ejection rubber or protection skirt are defective or not mounted.

Do not remove, change or override any safety devices or control elements.

Have an authorized service center check your device if the blade does not stop within 7 seconds.

Observe the maintenance instructions (see chapter "Maintenance").

Visually check that the receiver and Remote Control Transmitter are in perfect condition.

Never use the device if the receiver or Remote Control Transmitter are damaged.

Prior to use, check the RC functions and safety functions of the device (see chapter "Maintenance") to ensure safe function of the device.

Use caution during operation

Make sure that help can be provided in case of an emergency.

Only work during daylight or with adequate artificial lighting. Never work in the event of uncertain weather conditions and risk of lightning.

Be especially carefully when mowing on soft ground, nearby landfills, ditches, dikes and water edges.

Make sure that no persons, children or animals ride along.

Do not drive yourself on the device.

Only work when you have a clear view of the device and can fully oversee the danger area at all times.

Danger of poisoning due to exhaust fumes

Engine exhaust fumes contain carbon monoxide which can cause serious illness or death. Do not run the engine in a closed room, even when all doors and windows are open and the room seems to be sufficiently ventilated.

Run the engine only after you have moved the device to an outdoor area.

Observe the information in the operator's manual of the engine manufacturer.

Risk of injury when switching on

There is a risk of injury when switching on the device and the transmitter. Parts of the device may move and cause crushing injuries. Keep your hands and feet away from moving and rotating parts.

Ensure that there are no persons in the immediate vicinity

– when you switch on the device at the main switch.

Leave the danger zone,

– before you switch on the transmitter.

– before you start the engine.

Danger of injury during motor start

The engine must not be started:

– When fuel was spilled.

– When you or other persons are in close proximity.

Risk of injury when the blade is running

The status indicator on the device flashes when the blade is switched on.

Switch off the blade and wait until the blade stops

– when you drive on surfaces other than the mowing area.

– when you do not mow.

– when you cannot completely view the area to be mowed.

– when the device must be maneuvered out of a dangerous position.

– when the trafficability of the area to be mowed is too unsafe.

Risk of injury when the motor is running

Switch off the engine, wait for the blade and the engine to stop and remove the key at the main switch

– before you transport the device.

– before you step away from the device, even for just a short time.

– before you clean or check the device or before you carry out work on the device.

– before you unblock or unclog the discharge area.

Risk of injury due to uncontrolled rolling

Never switch off the device using the main switch. Otherwise, the parking will no longer be activated and the device can roll away.

Always press the start/stop button on the transmitter first, wait until the blade and engine have come to a complete standstill, and then switch off the device at the main switch (see chapter "Switching off and parking").

Only park the device on flat surfaces.

Risk of burns

Parts of the device may become hot during operation, e.g. the engine, exhaust, transmission and adjacent components. Do not touch hot parts. You can get burnt. If a jumpy movement occurs, the risk of additional injuries can result.

Vibrations

Have an authorized service center check the device

– when the blade has hit an object.

– if the device starts to vibrate unusually severely.

Unusual vibrations are an indication that

– blades are missing or broken,

– the blade is worn excessively or on one side or

– damage to the engine or cutter deck fastening.

Explosion hazard

Do not operate the device in potentially explosive environments where flammable liquids, gases or dusts are present. Sparks may be generated during operation, which could ignite dust or vapors.

Fire hazard

Parts of the device can become extremely hot during operation and this may cause fire.

– Carry a sufficient amount of suitable extinguishing media.

– Observe the device and the moved area even after operation to make sure that no fire breaks out.

To prevent a fire hazard, always keep the following components free of dirt, grass, hay, leaking oil, leaking fuel, grease, etc.:

– engine, ventilation grid

– battery, cable connections, electric drive units

– belt drives

Observe the information in the operator's manual of the engine manufacturer.

When fuel leaked or was spilled, there is an increased fire hazard.

– If the slope is too steep, fuel can leak from the carburetor or the tank. This presents a fire hazard!

Prior to mowing

Personal protective measures



During mowing, always wear safety shoes with good grip and long trousers. Do not mow with open sandals or while shoeless.



Wear safety gloves to protect yourself against injuries when working on the device.



Noise is causing health problems. Use personal ear protection when you are less than 15 meters (50 feet) from the device to avoid hearing damage.



Wear safety glasses and headgear.

Ask your specialized dealer about suitable protective equipment.

Preparing the mowing area

Prior to mowing, carefully check the perimeter of the lawn. Remove rocks, pieces of wood, bones, wires, and other objects that could be picked up and thrown out by the device.

Remove live cables from the mowing area. These can be damaged during mowing and cause an electric shock or short circuit.

Danger area

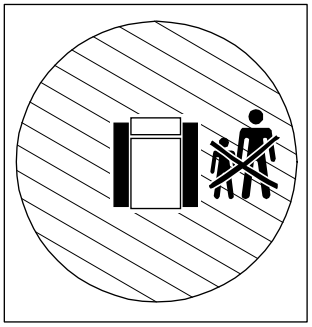

Within the danger area of the device, there is a risk of injury.

The size of the danger area depends on the conditions of the mowing area.

Stones, trash or other objects on the mowing surface can be caught by the blade and thrown out, causing serious injury. The area in front of the device is especially dangerous. On uneven surfaces, the blade can touch the ground and catch hidden objects.

There is a risk of injury from the rotating blade. Keep your hands and feet away from moving and rotating parts.

During operation, always keep away from the danger zone of the device.

Always disengage the blade before you approach a device that is standing still. Leave the danger zone before you engage the blade.

Dangerous situations can result from unintended steering or driving movements. Persons or obstacles can be hit or run over.

Never mow when persons, children, or pets are in the danger area.

Make sure

– that there are never people in the direction of travel of the device.

– that nobody else besides the user is on the mowing area.

Never drive the device towards yourself.

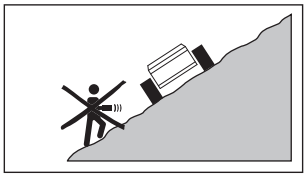

On slopes, the device can topple over and slide towards persons, trap them or rolling them over.

Make sure

– that nobody is positioned on the slope below the device.

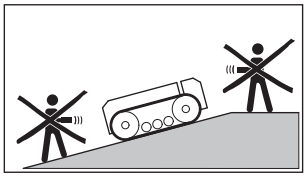

– that you are not in the danger zone.

– that you have a complete overview of the danger area at all times.

Working near the road requires special care.

– Pay attention to traffic when working close to roads. Do not expose yourself to any risk from road traffic.

– Make sure that the road is outside the danger area and that you do not endanger any road users.

There is a risk of property damage in the danger area around the device. Make sure that no vehicles, buildings or other material goods are damaged in the danger area.

Recommended position for the operator

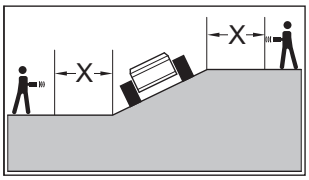

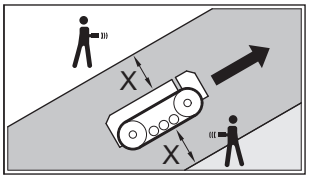

Outside the danger area (X), on the side of the device.

Stop the device when you change your position.

– Choose your position so that you are not in the danger area and you have a full view of the mowing area at all times.

Danger area for the operator when mowing

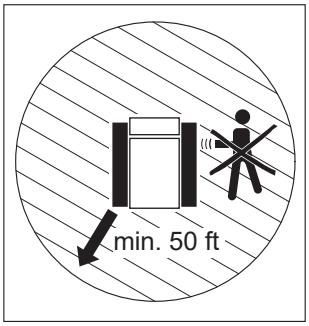

– With a radius of at least 15 meters (50 feet) around the device.

Danger area for the operator with disengaged blade

– A 5 meters (16 feet) radius around the device.

Driving on slopes

Observe the information in chapter “Danger area”.

If the device, while in use, stops in steep terrain or the engine cuts out, the device can roll away.

– If possible, stop the device crosswise to the slope.

– Never unlock the drive on a slope because the device can roll away.

– Take suitable safety measures to prevent the device from rolling away unintentionally. Secure the device, e.g. with a cable winch or by blocking the tracks with a squared lumber.

Danger due to tipping

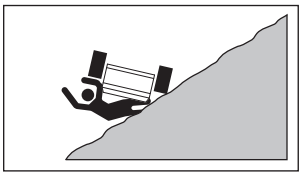

There is a risk of injury on slopes due to tipping or sliding. The device may trap or roll over people. Material goods can be damaged. Never stay below the device when on a slope. Never work when persons, children, or pets are in the danger area.

Safe work in steep terrain is only possible by a trained operator under ideal conditions and adapted driving style.

If the specified maximum slopes can be achieved also depends on the direction of travel, local conditions and other factors.

– Make sure that you know the slope of the hill or that the slope can be determined on site.

– If the ground is uneven, it is not possible to determined the slope without any doubt. The specified maximum slope inclinations can then not be achieved. There is an increased risk of tilting and accidents.

– Unfavorable conditions may reduce the maximum attainable slope, e.g. wetness, loose and slippery ground, dense growth, mowed grass, etc.

– Be extremely cautious when changing the direction.

– Always keep the speed low when moving on slopes.

– Do not start abruptly and do not brake abruptly.

– If the cutting height is set unnecessarily high or the mower is in maintenance position, the center of gravity of the device increases. As a result, the specified maximum slope gradients cannot be achieved. There is an increased tilting and slipping hazard!

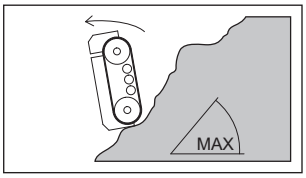

– While driving uphill or downhill, only use the device up to a maximum slope inclination of 44°.

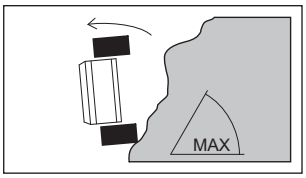

– Only use the device across the slope up to a maximum slope inclination of 55°.

– Do not turn if the slope inclination exceeds 44°.

If the downhill tracks get caught in depressions, terrain edges or paths, the device can tip over or slide away.

– Do not drive near dangerous areas (e.g. walls, slopes, steep declines, edges of bodies of water etc.).

When the uphill tracks encounter obstacles, the device can tilt or slip.

– Only drive when you know about the terrain conditions and terrain is free of obstacles.

– Watch for hills, dips and other visible hazards such as tree stumps, roots, branches, rocks, etc.

If the device tilts or slips

– Never try to stop a tilting or sliding device. Severe injuries can result.

– Remove leaking fluids (oil, fuel, battery acid) from the device and the floor. Deposit of contaminated soil environment friendly according to the local regulation.

– Undetectable damage may have occurred to the device. In case of malfunctions, there is a risk of injury. Have an authorized service center check the device.

Increased risk of tipping with additional load

Additional loads or attachments change the center of gravity of the device and increase the risk of tipping over.

Additional loads are not permitted.

Caution when using accessories

Only use accessories approved by the manufacturer.

Observe in particular the safety instructions in the operating instructions for the respective accessories.

Risk of injury due to unauthorised use

Do not leave the transmitter unattended to prevent unauthorised use.

Always press the start-stop button before putting the transmitter down.

Remove the key on the main switch when you are not using the device.

Protect transmitters and keys from unauthorised access, e.g. when leaving the device, performing maintenance and cleaning work, or storing the device.

When work is completed

Before you leave the device, wait for the blade and engine to stop and remove the key from the main switch.

After switching it off, let the device cool down for at least 20 minutes before you store it in a dry, closed, sufficiently ventilated room.

Never place the device with fuel in the tank inside a building where petrol vapors may come into contact with open flames or sparks.

Use caution during maintenance and repair

Only carry out work as described in these operating instructions. Have an authorized service center perform all other work.

Only use blades and spare parts approved by the manufacturer. Unauthorized blades and spare parts can cause severe injuries.

Prior to all maintenance work, wait until the engine comes to a standstill and pull off the spark plug connector.

We explicitly point out that, in accordance with the Product Liability Act, we are not liable for damages that were caused by our devices if

– worn or damaged parts were not repaired or replaced on time.

– these damages were caused by improper repair.

– when changing a part, our original parts or parts authorized by us were not used.

– the repair work was not carried out by an authorized service center.

The same applies for spare parts and accessories.

Controls and Features

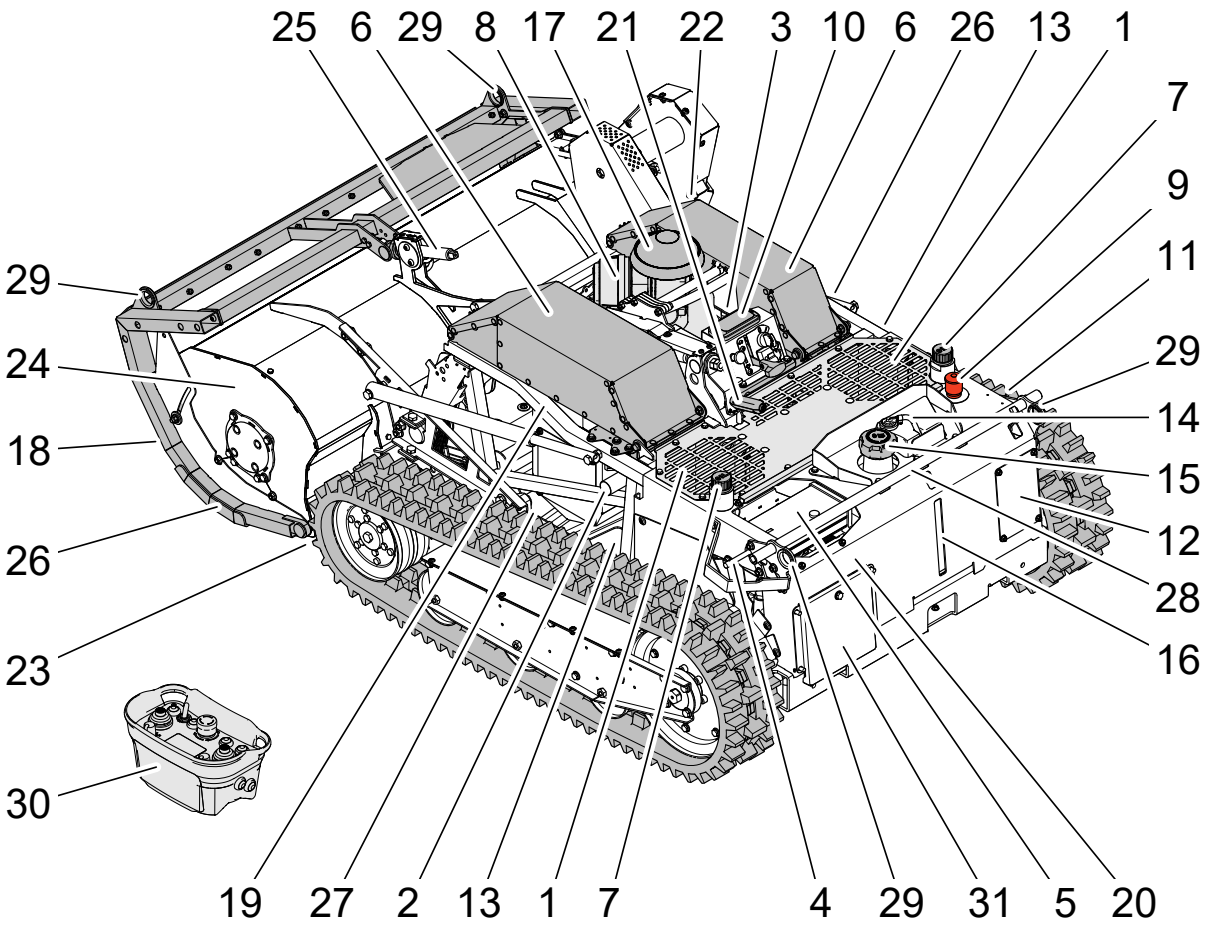

1 Transmission fan
2 Muffler
3 Oil dipstick / oil filler neck
4 Antenna
5 Receiver
6 Ventilation grid
7 Hydraulic oil expansion tank
8 Air filter
9 Emergency stop switch
10 Status indicator
11 Power socket
12 Fuse compartment cover / fuses (see chapter “Technical specifications”)
13 Unlocking drive
14 Tank ventilation
15 Tank cap
16 Fuel level sight window
17 Rain cap (see chapter “Assembly”)
18 Protection skirt/flaps (at the front of the device)
19 Frame
20 ID plate
21 Cutting height limitation adjustment
22 Cutting height indicator
23 Discharge guard (at the bottom of the device)
24 Mower deck cover
25 Skid plate adjuster
26 Skid plates
27 Tracks tensioner and spring pack
28 Extension tracks tensioner
29 Tie down points
30 Transmitter
31 Battery cover

Control elements on the device

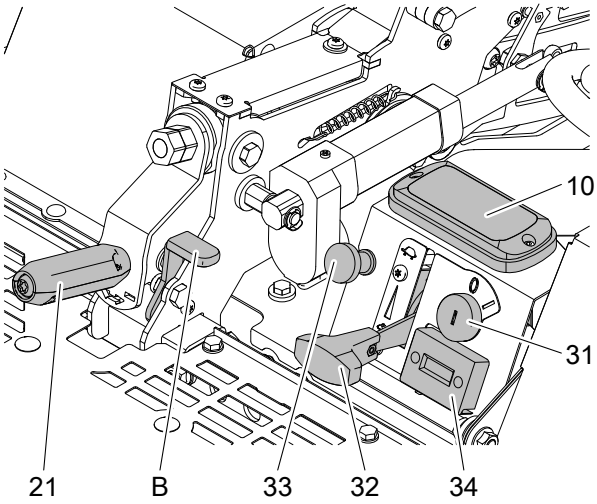

Main switch (31) with key

You can switch on/off the circuit of the control with the main switch.

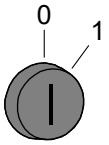

0: Off
The key can be removed.

1: On

Throttle control lever (32)

Using the throttle control lever, you change the engine speed.



1: Highest speed (full throttle)
Press the throttle control lever all the way down.

2: Lowest speed (idle)
Pull the throttle control lever all the way up.

Choke control lever (33)

The choke is closed only for start up the cold engine. As soon as the engine is running, open the choke.



Close the choke:
Pull out the choke control lever (**33**).



Open the choke:
Push in the choke control lever (**33**).

Hour meter (34)

The operating hours are counted as soon as the engine is running.

Display:

– When engine is running: engine speed

– When engine is off: operating hours

Status light (10)

The status light on the device flashes when the blade is engaged.

Emergency Stop switch (9)



Activate Emergency Stop:
Press the switch.

Revoke Emergency Stop:
Turn the switch in the direction of the arrow.

Cutting height limitation (21)

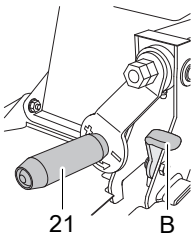

The lowest cutting height can be adjusted continuously. To prevent unintentional adjustment of the crank while working, the cutting height limitation can be fixed.

The top position is the maintenance position. The blade is automatically disengaged.

Notice: The cutting height is adjusted during operation using the height adjustment on the Remote Control Transmitter (see chapter “Setting the cutting height”).

Setting the lowest cutting height
Swivel the locking handle (**B**) up. Turn the cutting height limitation (**21**).

+: Increase the lowest cutting height.

–: Reduce the lowest cutting height.

Fixing the lowest cutting height:
Swivel the locking handle (**B**) up.

Cutting height display (22)

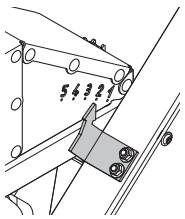

The cutting height can be continuously adjusted from 1 to 5.

The position above 5 is the maintenance position. The blade is automatically disengaged. The maintenance position can only be reached by turning the crank.

Unlocking drive (13)

To move the device without engine drive, unlock the drive on both sides of the device. This simultaneously releases the parking brake.

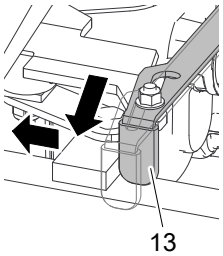

Unlocking drive/releasing parking brake:
Pull lever (**13**) forward and engage.

Locking drive/activating parking brake:
Release lever (**13**) and push it back.

Control elements on the transmitter

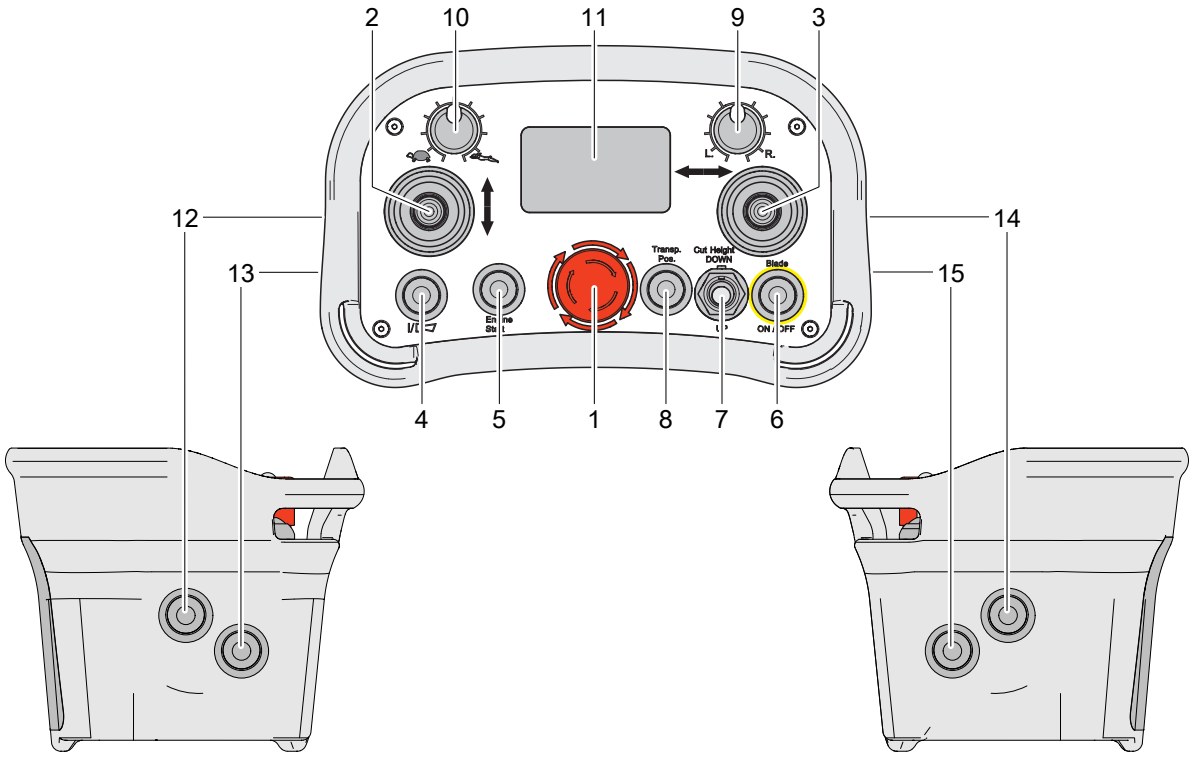

Pos.	Symbol	RC function	Type
1		Remote Control Transmitter: Switch on, switch off	Start-stop switch
2		Forward drive and driving speed	Joystick
		Reverse drive and driving speed	
3		Steering to the left	Joystick
		Steering to the right	
4		Connecting/horn	Button
5	Engine Start	Engine start	Button
6	Blade ON/OFF	Engage/disengage blade	Button
7	Cut Height DOWN	Lower cutting height	Toggle switch
	UP	Higher cutting height	
8	Transp. Pos	Transport position (blade is disengaged).	Button
9	L. R.	Trimming steering	Rotary knob
10		Fast maximum driving speed	Rotary knob
		Slow maximum driving speed	

Pos.	Symbol	RC function	Type
11	-	Display (see chapter “Display on the Remote Control Transmitter”)	-
12	-	For calibration purposes by an authorized service center.	Button
13	-		Button
14	-		Button
15	-		Button

Display on the Remote Control Transmitter

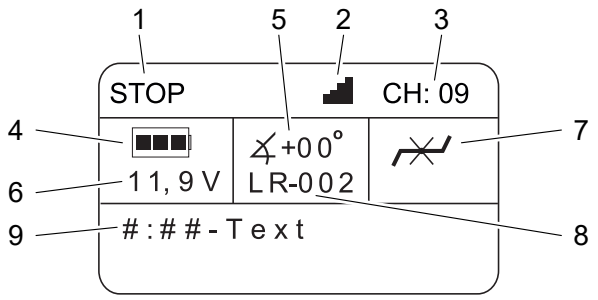

Pos.	Symbol	Meaning
1	SCAN	Channel search: After switching on, the Remote Control Transmitter establishes a radio connection with the receiver.
	STOP	Remote Control Transmitter not active: After a radio connection is established between the Remote Control Transmitter and receiver, the Remote Control Transmitter switches to inactive mode.
	RUN	Remote Control Transmitter in operation: Operational readiness of the Remote Control Transmitter
2		Signal strength and radio connection: – No bar: No reception. – 4 bars: Full reception.
3	CH: ##	Channel number: Until a radio connection is established, different channel numbers are run through. After radio contact has been established between Remote Control Transmitter and receiver, the channel number is displayed.
4		Battery capacity of the Remote Control Transmitter: – No bar: Battery empty. Change the batteries (see chapter “Checking and changing the battery of the transmitter”). – Three bars: Battery full.
5	+00°	Inclination: Current inclination of the device in the direction of travel or across the direction of travel. Only the larger angle is displayed.
6	11,9 V	Battery voltage of the device

Pos.	Symbol	Meaning
7		Blade disengaged
		Blade engaged
8	LR-002	Steering trim: Set value of rotary knob “trim steering”.
9	#:##	Error code: When the control detects an error, an error code is displayed. To see what this code means, refer to chapter “Error codes”.
-		Energy saving mode: If you do not press any buttons over a longer period of time, the Remote Control Transmitter switches off automatically.

More elements on the Remote Control Transmitter

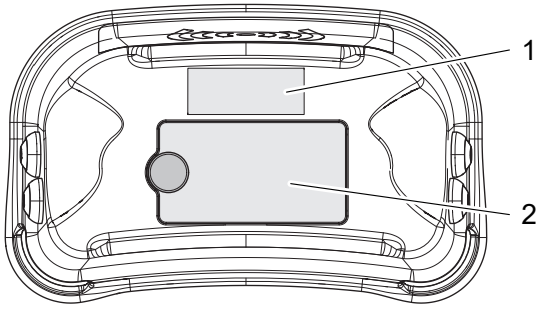

Pos	Designation	Description
1	Type plate	Information about the Remote Control Transmitter – Unit: Type designation of the Remote Control Transmitter – System: Type designation of the combination of Remote Control Transmitter and receiver – Serial no: Serial number of the Remote Control Transmitter – Address: Radio address of the Remote Control Transmitter – Date: Date of manufacture – Country of manufacture
2	Cover of battery compartment	To change the battery (see “Checking and changing the battery of the transmitter”).

Elements on the receiver

Notice

The USB socket on the receiver is closed with a rubber plug. Water penetration into the USB socket can cause corrosion and damage to the receiver.

► Check that the rubber plug is undamaged and firmly connected to the receiver.

► Ensure that the USB socket is closed with the rubber plug at all times.

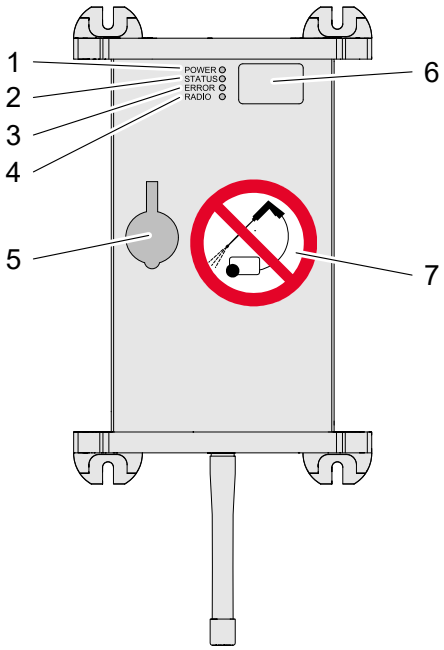

Pos	Designation	Description
1	LED “POWER”	Lights up green: The battery voltage is ok.
2	LED “STATUS”	Glowing yellow: Receiver and Remote Control Transmitter connected.
3	LED “ERROR”	Glowing red: Error, Emergency Stop
4	LED “RADIO”	Flashing green irregularly: Radio connection not optimal
		Lights up green: Optimal radio connection.
5	USB port	Only for authorized service center
6	Type plate	Information about the receiver: – Product name of the receiver – Unit: Type designation of the receicer – System: Type designation of the combination of Remote Control Transmitter and receiver – Serial no: Serial number of the receiver – Address: Radio address of the receiver – Date: Date of manufacture – Country of manufacture
7	Prohibition sign	Do not clean the device with water spray or a high-pressure cleaner!

Optical signals

Status indicators on the device

– Flashing: Beware, blade is engaged.

Acoustic signals

Signals of the device

– Single honk signal after the Remote Control Transmitter is switched on: Radio contact between Remote Control Transmitter and receiver was successfully established.

– Horn sounds at intervals: Receiver is in operation. Radio contact to Remote Control Transmitter interrupted. Warning of battery consumption.

Safety functions

To ensure safe operation at all times, the device is equipped with safety functions. To make the engine and the blade run, certain requirements need to be fulfilled. These requirements are described in the corresponding chapters.

The device is equipped with an Emergency Stop. To avoid danger, use the Emergency Stop to switch off all functions of the device. The device is immediately put into a safe state (see chapter “Emergency stop”).

Familiarise yourself with the safety features. Check the safety features before and after each use.

Information on mowing

Prior to mowing, check the device for completeness, proper function, and cleanliness. A dirty ventilation grid causes overheating of the engine which can result in engine damage. There is a risk of fire due to dirt on the muffler.

Frequent engagement and disengagement of the clutch increases wear of the blade drive belt and the blade brake. Especially in case of high grass, clutch engagement leads to overload.

To keep the area well maintained, mow frequently and keep the grass short.

Only mow with a sharp and undamaged blade. Check blade and flail shaft (see chapter “Maintenance”). Contact an authorized service center if you find faults or damage during the test.

Do not mow when the grass is wet or when it is raining. The turf may be damaged and there is a danger of slipping!

Turn the device around only in already mowed sections.

Do not leave the device unattended while the blade engine are running.

Set the cutting height so that the blade edges do not touch the ground in case of uneven terrain. To do this, use the cutting height limiter and the adjustment of the sliders.

For mowing, always turn the throttle lever to full throttle to achieve the best mowing performance.

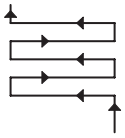

To avoid blockage during the ejection of grass, we recommend, for flat terrain, to proceed according to the mowing patterns. Mulch is shredded into much smaller pieces when you mow the terrain once again in the opposite direction.

Oberse the instructions in chapter “Danger area” and “Driving on slopes”.

Stop the device when you change your position.

– Choose your position so that you are not in the danger area and you have a full view of the mowing area at all times.

Prior to starting

Checking the oil level

Notice

Incorrect oil level can damage the engine.

► Prior to each use, check the engine oil level.

Observe the information in the operator’s manual of the engine manufacturer.

Fuel

For fuel, use lead-free gas (see operating instructions of the engine manufacturer).

You can use E10 fuel. Do not store E10 fuel longer than 30 days.

Do not use E85 fuel. The fuel must contain 10 % ethanol or less.

Adding fuel

Warning

Fuel is ignited by hot engine parts.

► Prior to filling up, switch off the engine and wait for at least 20 minutes until the engine has cooled down. Observe the safety instructions regarding the fuel!

Filling up with fuel

1. For filling, use a canister with filler spout or a funnel.
2. Open the canister carefully so that existing excess pressure is slowly reduced.
3. Open the tank cap carefully so that existing excess pressure is slowly reduced and no fuel sprays out.
4. Fill the fuel tank.
5. Tightly close the tank cap again.
6. Carefully remove any fuel residue (wipe dry) and wait until the fuel vapors have dissipated before starting the engine.

Carrying the Remote Control Transmitter

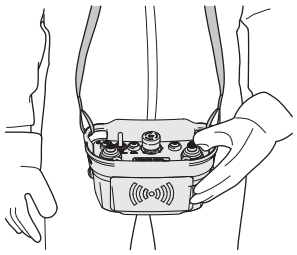

Attach the belt to the Remote Control Transmitter.

Carry the Radio Remote Transmitter as shown. Adjust the length of the belt so that you can easily reach the controls and operate them safely at all times.

Checking and changing the battery of the transmitter

When working, always carry extra batteries.

Consequences of too weak or unsuitable batteries in the transmitter are:

– The range of the radio contact drops.

– The radio contact becomes unreliable.

– An Emergency stop is triggered.

– The device cannot be operated any longer.

Notice: The transmitter can be operated with commercially available rechargable batteries. However, peak battery voltage is lower than Alkaline batteries. Alkaline batteries give you longer run time.

Checking the battery

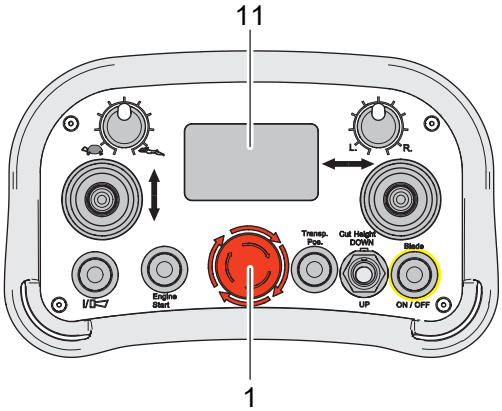

1. Turn the start-stop switch (**1**) clockwise to switch on the transmitter.
   ⇨ In the display (**11**) the channel number is displayed.
   ⇨ In the display (**11**) the battery capacity is displayed.

Notice: If the batteries are unsuitable or faulty, this test can produce an incorrect result. In that case, please replace the batteries.

Changing the batteries

1. Move the device to a safe position and switch it off.
2. Loosen the locking screw at the battery compartment and remove the cover.
3. Replace the batteries with 2 new AA batteries or 2 charged AA batteries.
4. Close the cover and tighten the locking screw.
5. Switch on the transmitter via the start-stop switch.
6. Check the battery capacity on the display.

Adjusting the skid plates

Warning

Risk of injury due to rotating blade.

► Engage the blade and switch off the engine before you adjust the sliders.

Warning

Risk of injury caused by ejected objects.

► Adjust the skid plates so that the blade does not touch the ground even on uneven terrain.

By adjusting the skid plates, the minimum distance between the blade and the ground is set. Depending on the nature of the terrain, you can prevent parts of the mowing area or objects from being caught by the blade.

The adjustment of the skid plates is stepless.

Notice: A setting that is too low can lead to increased wear of the blades.

1. Switch off the blade and wait until the blade stops.

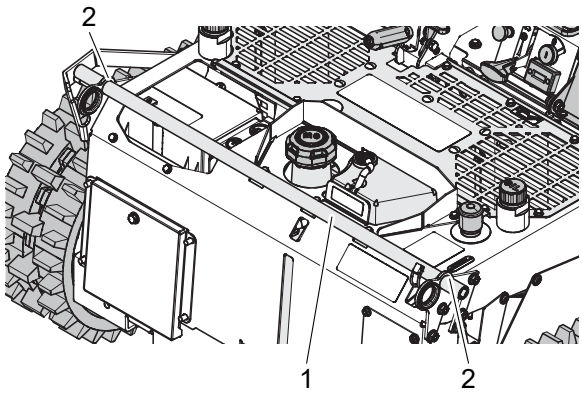

2. Loosen the securing splint and remove the extension (**1**) from the holder (**2**).

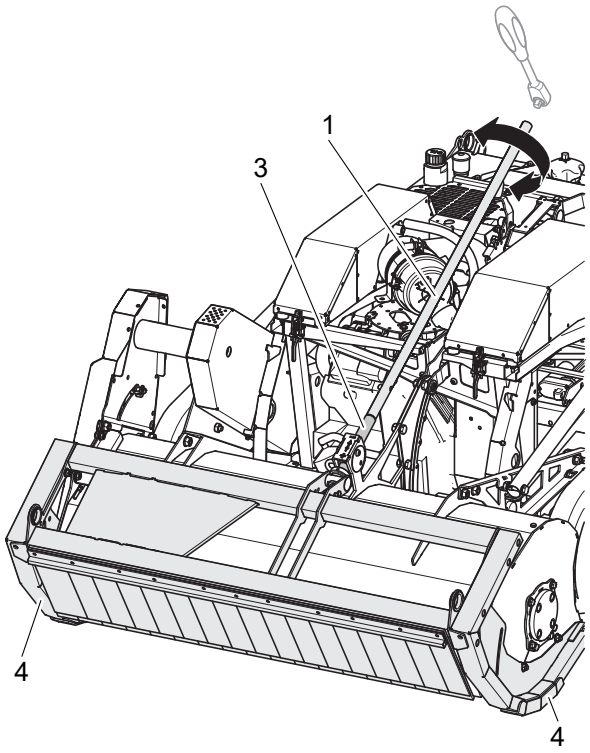

3. Place the extension (**1**) on the square (**3**) of the spindle.
4. Put a socket wrench handle 1/2″ on the extension (**1**) and turn the square (**3**) until the skid plates (**4**) have reached the desired distance.
   - ⇨ Spindle on the square (**3**) moves in direction +: increases the distance to the cutting tool.
   - ⇨ Spindle on the square (**3**) moves in direction –: reduces the distance to the cutting tool.
5. Put the extension (**1**) back into the holder (**2**) and fasten it with the securing splint pin.

Adjusting cutting height

Warning

Risk of injury due to rotating blade.

► Disengage the blade before you approach the device.

Warning

Risk of injury caused by ejected objects.

► Set the cutting height so that the blade does not touch the ground even if the terrain is uneven.

► Do not set the cutting height too high. If the cutting height is too high, objects can be ejected.

The cutting height limit determines the lowest cutting height. The cutting height is adjusted during operation using the height adjustment on the transmitter (see chapter “Setting the cutting height”).

Notice: If the cutting height limit or cutting height is set too high, the cut quality may deteriorate.

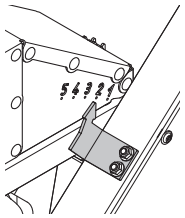

The cutting height limit can be continuously adjusted from 1 to 5.

The position above 5 is the maintenance position. The blade is automatically disengaged. The maintenance position can only be reached by turning the crank (**1**).

In the maintenance position, the blade is automatically disengaged and cannot be engaged.

Setting lowest cutting height:

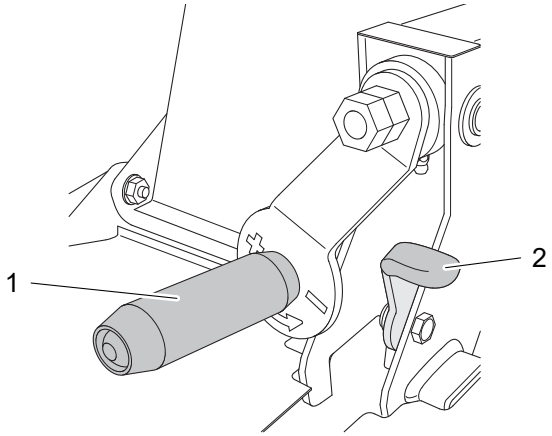

1. Switch off the engine and wait until the blade has come to a standstill.
2. Stand behind the device.
3. Swing the locking handle (**2**) upwards.
4. Turn the crank (**1**) until the desired lowest cutting height is reached.
   - ⇨ Turning in the + direction: Increase lowest cutting height.
   - ⇨ Turning in the - direction: Reduce lowest cutting height.
5. Swing the locking handle (**2**) down to prevent unintentional adjustment of the crank handle when working.
6. Leave the danger zone before engaging the blade.

Switching on receiver and transmitter

Warning

Risk of injury due to unexpected movement when switching on, starting, and during operation.

- ► Make sure that no persons, children, animals or objects are in the danger area.
- ► Keep your hands and feet away from the rotating parts.
- ► Leave the danger zone before switching on the transmitter or starting the engine.

1. Insert the key into the main switch of the device.
2. Turn the main switch to pos. I.

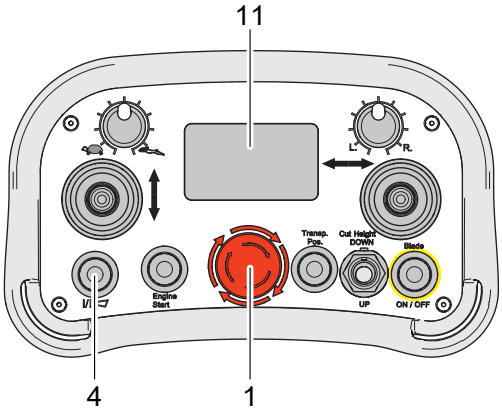

3. Turn the start-stop switch (**1**) clockwise to switch on the Remote Control Transmitter.
   - ⇨ In the display (**11**) the mode “SCAN” is displayed.
4. Wait until the horn of the device sounds once.
   - ⇨ In the display (**11**) the channel number is displayed.
   - ⇨ In the display (**11**), the mode “STOP” is displayed.
5. Press the button “Connect/horn” (**4**) on the Remote Control Transmitter to switch the device ready for operation.
   - ⇨ The horn signals that the device is ready for operation.
   - ⇨ In the display (**11**) the mode “RUN” is displayed.

Selecting the radio channel

When you switch on the Remote Control Transmitter, the receiver automatically searches for a suitable radio channel.

If several remote controlled devices are operated at the same time or when another Remote Control Transmitter is located close by, faults in the radio contact can occur. Then change the radio channel.

Switch the radio channel

1. Press the start-stop-button on the Remote Control Transmitter and switch off the device using the main switch. Wait 5 seconds.
2. Switch the receiver and the Remote Control Transmitter on again (see chapter “Switching on receiver and transmitter”).
   - ⇨ The transmitter will restart and search for a new free channel.

Training operation

Warning

Risk of injury due to rotating blade.

- ► Make sure that no persons, children, animals or objects are in the danger area.

Warning

Risk of injury caused by ejected objects.

- ► Never mow when persons, children, animals or objects are in the danger area.

Warning

Risk of injury due to unexpected movement when switching on, starting, and during operation.

- ► Make sure that no persons, children, animals or objects are in the danger area.
- ► Immediately press the start-stop switch on the transmitter and the Emergency Stop on the device if an unexpected movement occurs.
- ► Make sure that no further hazards result from an unexpected movement.

Familiarise yourself with the functions and control elements in advance that are described in chapter “Operating”.

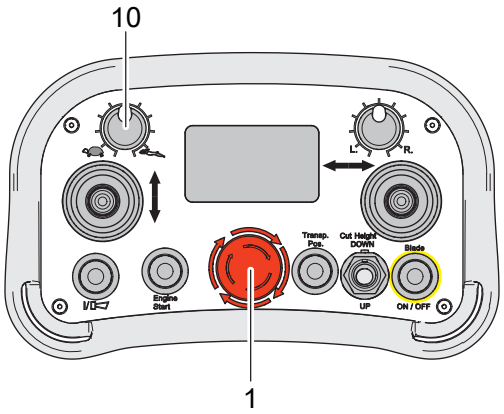

Make sure that you know at all times how to stop the device:

– Press the start-stop switch (**1**) on the transmitter.

Limit the maximum travel speed using the rotary knob (**10**) on the transmitter.

Notice: Travel speed may not exist if a very low setting is used.

First practice driving and steering with the blade switched off on a large, open and level area.

Familiarise yourself with the driving and steering behavior, especially when reversing.

Practice driving around obstacles.

Never steer the device towards yourself.

Mow on a level and clear area first, slowly increase the difficulty (uneven terrain, obstacles, slight slopes).

Move on to difficult terrain and slopes only after you have safely mastered the device.

Steer the device with calm and steady movements. The fewer steering corrections you make, the more efficiently you can mow.

Maintain a steady speed. When driving in tall grass, difficult terrain and on slopes, only drive at a speed that requires as few speed corrections as possible.

Try to drive in as straight a line as possible. Mow with sufficient overlap to the already mowed strip to avoid frequent steering corrections. This reduces reworking and ensures higher area output.

Operating

Starting the engine

Requirements

– Receiver and transmitter are switched on and ready for operation (see chapter “Switching on receiver and transmitter”).

Starting

Danger

Danger of poisoning due to poisonous exhaust gases.

► Do not operate the engine in closed or insufficiently ventilated rooms.

► Please observe the safety instructions regarding the poisoning risk.

Warning

Risk of injury due to unexpected movement when switching on, starting, and during operation.

► Make sure that no persons, children, animals or objects are in the danger area.

► Immediately press the start-stop switch on the transmitter and the Emergency Stop on the device if an unexpected movement occurs.

► Make sure that no further hazards result from an unexpected movement.

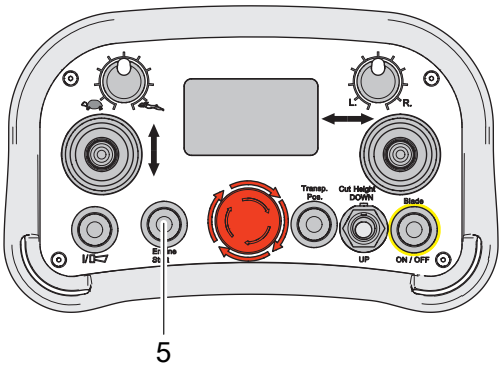

1. **Cold start:**
   Move the throttle lever to middle position. Close the choke.
   When engine is warm:
   Move the throttle lever to middle position. Do not use the choke.
2. Press the “Engine start” button (**5**) on the transmitter.
   ⇨ Engine is started.
3. **Only after cold start:**
   Open the choke.
4. For mowing, set the throttle control lever to the maximum speed.

Driving

Warning

Risk of injury caused by the moving device.

- ► Make sure no other persons stand in front of or behind the device and that your path is clear of obstacles.
- ► Make sure that no other persons, children or animals are transported.
- ► Do not ride on the device yourself.
- ► Never drive the device towards yourself.
- ► Make sure that you are outside the danger zone.

Warning

Driving on slopes is dangerous. There is a tilting and slipping hazard.

- ► Observe the safety instructions regarding “Driving on slopes” and “Danger area“.

Notice

Steering while stationary or turning on the spot can damage the ground.

- ► Only steer or turn when stationary if the ground is not damaged.
- ► Note that steering while stationary on a surface with good grip (e.g. concrete or asphalt) can lead to increased wear of tracks.

Steering

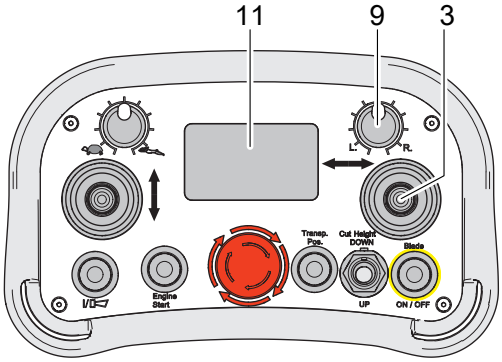

Steer the device with the right joystick (**3**) to the left or to the right.

The more you push the joystick, the more the device steers.

Notice: excessive steering movements reduce traction. The device can stop or damage the ground.

Steering when stationary

The device can be turned on the spot. The device rotates around its own axis.

The more you push the joystick, the faster the device rotates.

When you release the joystick, the rotation will stop.

When turning the device, make sure thon the device always moves away from you.

Steering while driving

The device drives a curve.

The further you push the joystick, the tighter the curve becomes.

When you release the joystick, the device steers straight forward.

Trimming steering

If the device does not drive straight despite the center position of the steering, compensate with the “Trim steering” rotary knob (**9**).

The value of the steering trim is shown on the display (**11**).

– The values are between –127 (maximum steering trim to the left) and 127 (maximum steering trim to the right.

– The value 000 corresponds to the middle position (no steering trim).

R. When the device moves to the left:
Turn the rotary knob “Trim steering“ (**9**) to the right until the device drives straight ahead.

L. When the device moves to the right:
Turn the rotary knob “Trim steering” (**9**) to the left until the device moves straight ahead.

Driving

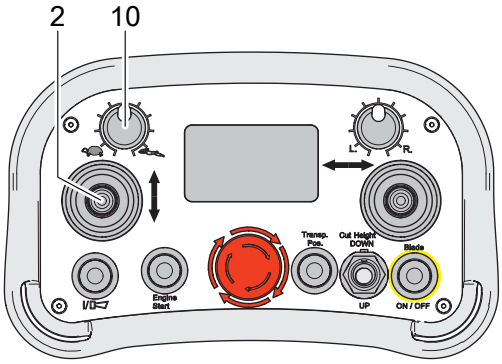

Adjust the speed and the direction of travel with the left joystick (**2**).

The more you push the joystick, the faster the device moves.

Moving forward: Pressing joystick forward

Stopping (neutral position/parking brake): Releasing the joystick

Moving in reverse: Pressing joystick backward

Always reverse slowly. Be especially cautious when the blade is engaged.

Limiting the speed



Fast maximum travel speed



Slow maximum travel speed

Use the rotary knob (**10**) to limit the travel speed to a speed at which you can safely control the device. This speed is reached when you push the joystick for the driving speed as far as it will go.

Notice: Adapting the driving speed to the mowing conditions enables:

– Clog-free mowing.

– Comfortable holding of the joystick at the stop.

– The device rotates more slowly around its own axis when turning.

Driving on steep terrain

Warning

Driving on slopes is dangerous. There is a tilting and slipping hazard.

► Have a qualified technician show you how to use the machine safely before mowing on steep terrain.

► Observe the safety instructions regarding “Driving on slopes” and “Danger area“.

Notice

Especially on steep terrain, the engine can be damaged if the oil level is too low.

► Prior to each use, check the engine oil level “Maintenance”).

Preferably drive crosswise on the slope. This reduces the risk of tipping and improves the traction of the tracks.

Notice: Excessive steering movements on steep terrain reduce traction. The device may stop or damage the ground.

Setting the cutting height

Warning

Risk of injury caused by ejected objects.

► Adjust the cutting height so that the blade does not touch the ground even on uneven terrain.

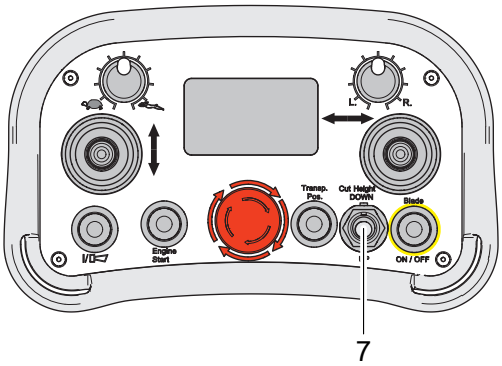

Continuously adjust the cutting height with the toggle switch (**7**) from the lowest cutting height up to max. 5. The lowest cutting height that can be achieved depends on the cutting height limitation (see chapter “Adjusting cutting height”).

Notice: If the cutting height is set too high, objects can be ejected. In addition, the cutting pattern may be worse.

Cut Height

UP	Increasing cutting height: Continue to press the toggle switch (**7**) in direction “UP” until the desired cutting height is reached.
DOWN	Reducing cutting height: Continue to press the toggle switch (**7**) in direction “DOWN” until the desired cutting height is reached.

Engaging blade

Warning

Risk of injury due to rotating blade.

- ► Make sure that no persons, children, animals or objects are in the danger area.
- ► Make sure that you are outside the danger zone.

Warning

Risk of injury caused by ejected objects.

- ► Never mow when persons, children, animals or objects are in the danger area.
- ► Make sure that you are outside the danger zone.

Only engage the blade when it can rotate freely and does not touch objects or the ground.

Do not engage the blade in uncut grass because the blade drive is overloaded, can be damaged or wears prematurely.

Requirements

– The engine is running.

– The blade is not in maintenance position.

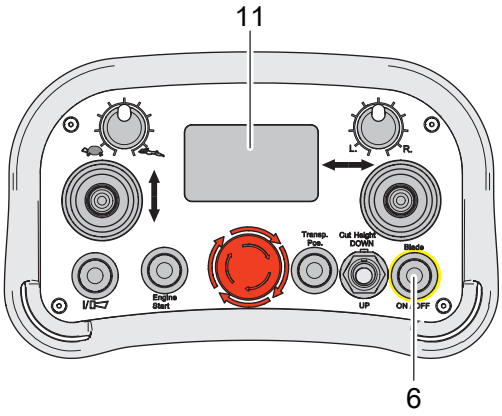

Engaging blade:

1. Set the highest cutting height.
2. Press the button (**6**) to engage the blade.
   - ⇨ The blade is engaged.
   - ⇨ The status indicator on the device flashes.
   - ⇨ In the display (**11**) the symbol “Blade engaged” is displayed.
3. Set the desired cutting height.

Disengaging the blade:

1. Press the button (**6**) to disengage the blade.
   - ⇨ The blade is disengaged.
   - ⇨ The status indicator does not flash any longer.
   - ⇨ In the display (**11**) the symbol “Blade disengaged” is displayed.

Moving blade to transport position

The blade can be moved to transport position from any cutting height. Use the transport position if the device is only to be moved, e.g. to drive over paths or to move the device out of a dangerous situation.

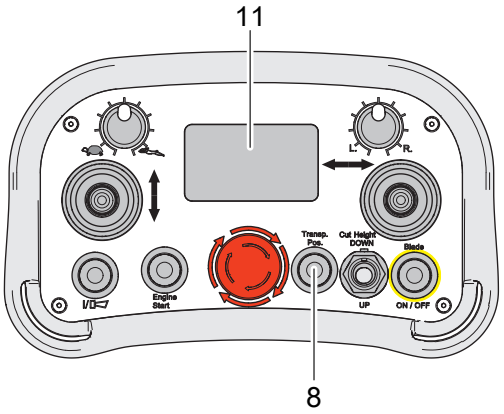

1. Briefly press the button (**8**) to move the blade to transport position.
   - ⇨ The blade is immediately disengaged.
   - ⇨ The blade is moved to transport position.
   - ⇨ The status indicator does not flash any longer.
   - ⇨ In the display (**11**) the symbol “Blade disengaged” is displayed.

Switching off and parking

Warning

There is a risk of injury in case of unauthorized use.

► Press the start-stop switch on the transmitter.

► Remove the key on the main switch when you are not using the device.

Warning

Risk of injury due to device that is no longer controllable.

If you switch off the main switch on the device first, the receiver is no longer active. The parking brake is not activated and the device can roll away.

► Always switch off the device in the order described in the following section.

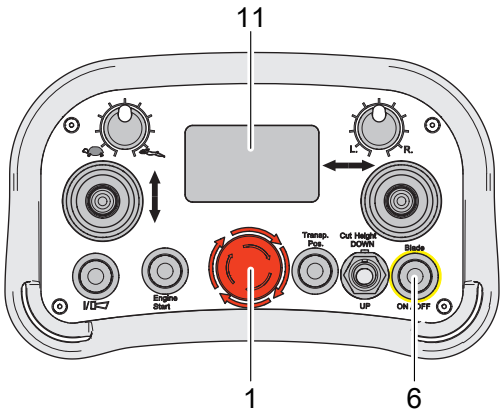

1. Release both joysticks.
2. Press the button (**6**) to disengage the blade.
   ⇨ In the display (**11**) the symbol “Blade disengaged” is displayed.
3. Press the start-stop switch (**1**) on the transmitter.
   ⇨ The engine is off.
   ⇨ The travel drive goes to zero position.
   ⇨ After 10 seconds, the horn sounds with interval.
4. Switch off the device using the main switch.
   ⇨ The sounding of the horn in intervals is finished.
   ⇨ The receiver is now de-energized.
5. Remove the key from the main switch.

Notice: If you do not switch off the main switch at the device, the receiver continues to consume power. After 10 seconds, the horn sounds with interval. Switch off to the main switch so that the battery is not discharged.

Emergency stop

The device is equipped with an Emergency Stop function. To avert danger, the Emergency Stop function immediately puts the device into a safe state.

The Emergency Stop function can be triggered manually by the user or automatically by the device control.

Emergency Stop function on the Remote Control Transmitter

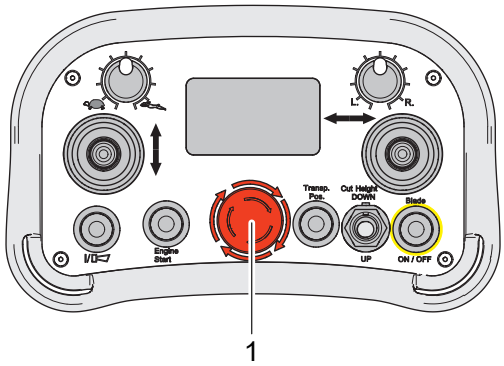

Immediately press the start-stop-button (**1**) on the Remote Control Transmitter,

– In case of an emergency or a hazardous situation.

– If the device does not work properly.

– To switch off the Remote Control Transmitter.

Emergency Stop switch on the device

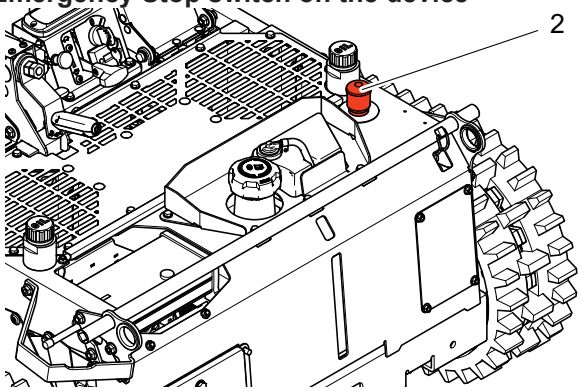

If the device cannot be switched off at the transmitter or the Emergency Stop function of the transmitter has no effect, press the Emergency Stop switch (**2**) on the device.

Please observe the notices on the danger zone. Approach the device only from the rear.

Do not sue the Emergency stop switch to normally switch off the device.

Causes of the Emergency stop

– Loss of radio connection between transmitter and receiver.

– Malfunction of the control or the device.

– The device has tipped.

Notice: When the control detects an error, an error code is displayed. To see what this code means, refer to chapter “Error codes”.

Consequences of an Emergency Stop

The device is brought into a safe state.

– The blade is disengaged.

– The engine is switched off.

– The travel drive goes to zero position.

– The parking brake is activated.

– The control function of the transmitter is switched off.

– The engine cannot be started.

Procedure after an Emergency stop

Warning

Risk of injury due to unexpected movement when switching on, starting, and during operation.

► Make sure that no persons, children, animals or objects are in the danger area.

► Immediately press the start-stop switch on the transmitter and the Emergency Stop on the device if an unexpected movement occurs.

► Make sure that no further hazards result from an unexpected movement.

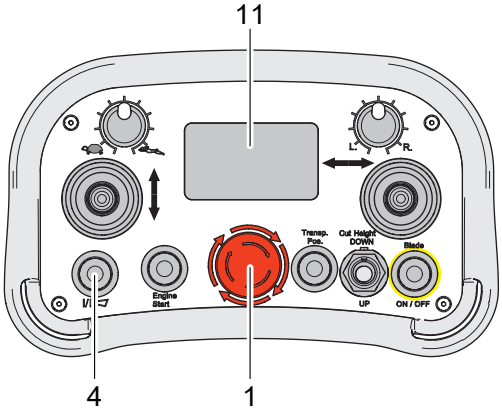

After an Emergency Stop, the following starting procedure must be carried out.

1. Switch off the device using the main switch.
2. Check and eliminate the cause for the Emergency stop. If necessary, observe on the display (**11**) the shown error codes (see chapter “Error codes”).
3. Switch off the transmitter by pressing the start-stop switch (**1**) and wait 5 seconds.
4. If necessary, turn the Emergency Stop switch on the device clockwise.
5. Switch on the device using the main switch.
6. Turn the start-stop switch (**1**) clockwise to switch on the transmitter.
   ⇨ In the display (**11**) the mode “SCAN” is displayed.
7. Wait until the horn of the device sounds once.
   ⇨ In the display (**11**) the channel number is displayed.
   ⇨ In the display (**11**), the mode “STOP” is displayed.
8. Press the button “Connect/horn” (**4**) to switch the device ready for operation.
   ⇨ The horn signals that the device is ready for operation.
   ⇨ In the display (**11**) the mode “RUN” is displayed.

Transport

Notice

Risk of damage to the transmitter due to improper transport and storage. Mechanical stress, moisture ingress or direct sunlight can damage the transmitter and cause malfunctions.

► Secure the transmitter during transport, e.g. against rolling around, falling or other mechanical stress.

► Always transport and store the transmitter protected from rain, moisture and direct sunlight.

Transport the device by truck or trailer designed for a payload of at least the empty weight of the device.

Transport on pallets

For transport over short distances, use a fork lift or a lift truck.

For longer distances, load the device with a fork lift onto a freight vehicle or trailer.

The user must be authorized to operate a fork lift. When the machine is lifted, all persons must step away from the working area of the fork lift.

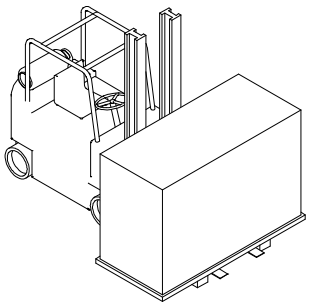

Notice! Drive the fork lift completely under the longitudinal beams of the wooden pallets.

Transport of ready-to-use device

Warning

Risk of injury due to the heavy weight of the device. The device can fall over and fall down and cause severe injuries.

► Observe the following notices.

Do not stay in the tilting area of the device.

Prior to each transport, let the device cool down for at least 20 minutes.

Loading

Use suitable ramps for loading that

– can carry the empty weight of the device + 200 kg (440 lbs).

– are wider than the device.

– have a slip-free surface.

Notice

Risk of damage due to incorrect fastening of straps.

► Fasten the straps only to the tie down points as shown in the figure.

► Do not overtighten the straps. The tie down points or the device can be damaged.

► The lashing points are not suitable for lifting the device.

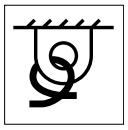

There is a designated tie down point for the device in the immediate vicinity of the label.

1. Put the device in front of the ramps and make sure that the ramps
   – are as wide as the wheel gauge of the device.
   – are tightly secured to the platform.
   – are not steeper than 15°.
2. Carefully drive the device via the ramps onto the platform.
3. Observe the instructions in chapter “Switching off and parking”.
4. Secure the device against rolling, sliding and tilting. Use straps that support the weight of the device.
5. Set the mower to the lowest cutting height so that the skids touch the ground.
6. Secure the device for transport using the designated tie down points. Use straps that support the weight of the device.
7. Observe local regulations on load securing.

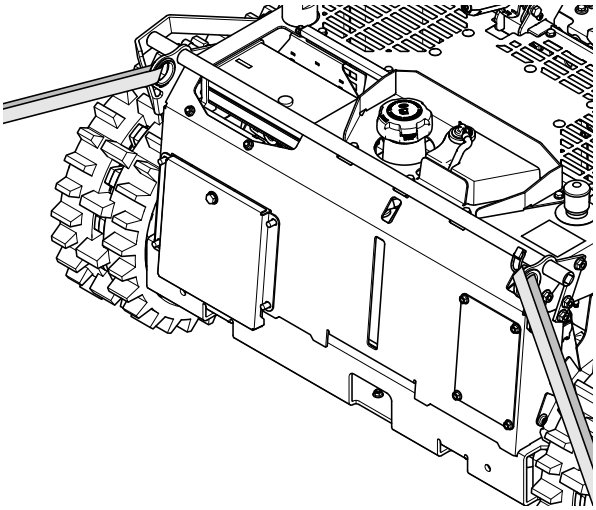

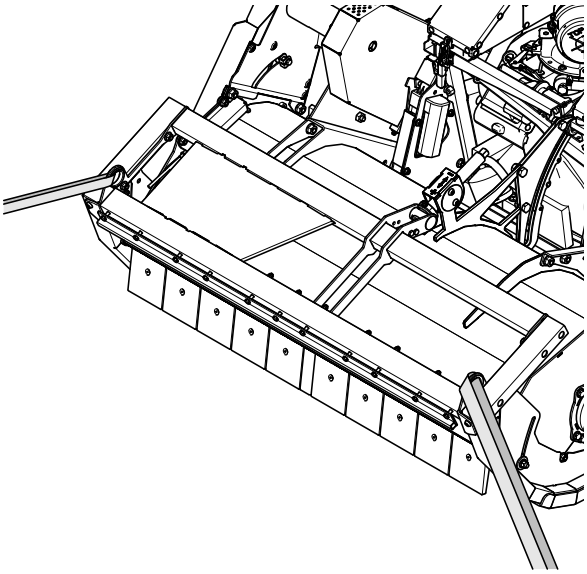

Unloading the device

1. Secure the device against rolling away before loosening the transport fastenings.
2. Slacken the transport attachments.
3. Carefully drive the device over the ramps off the loading area.

Observe the information in chapter “Loading”.

Moving the device without drive

Warning

The device can roll away when the drive is unlocked.

► Never unlock the drive in steep terrain without securing the device against rolling away.

► Please observe the following notices.

If the engine or drive system stops working, the device can be towed away.

1. Secure the device against rolling or sliding.
2. Use a suitable towing device (e.g. cable winch) that can hold the weight of the device.
3. Attach the towing device exclusively to the tie down points or frame parts of the device that can bear the weight of the device.
4. To tow, Unlock the drive. This also releases the parking brake.

Disconnecting the drive

Caution

Risk of injury due to hot silencer.

► Do not touch the silencer when unlocking the drive. The silencer becomes very hot during operation and you can get burned.

Notice

When the engine is started while the drive is unlocked, the hydraulic drive can be destroyed.

► Never start the engine when the drive is unlocked.

To move the mower without engine drive, unlock the drive on both sides of the device.

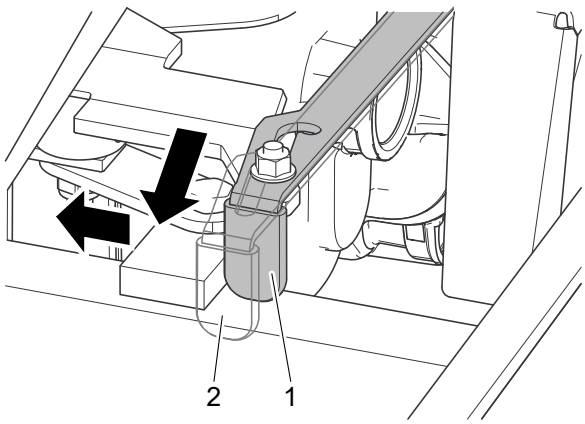

1: = Locked

2: = Unlocked

Lifting the device

Danger

Danger to life due to suspended loads. If the lifting gear is improperly secured or damaged, persons may be trapped, seriously injured or killed by falling loads.

► Make sure that no persons, children, animals or objects are in the danger area.

► Do not step under or into the swing range of suspended loads.

Notice

Risk of damage due to incorrect fastening of lifting gear.

► Attach the lifting gear exclusively to the points shown in the illustration.

► Tighten the lifting gear so that it cannot slip.

► Make sure that the slings do not damage the appliance if they become taut during lifting. Open the ventilation grids if necessary.

Use suitable lifting gear and slings, e.g. round slings, to lift the device.

The operator must be authorized to operate the lifting gear.

Ensure that you use lifting gear that meets the following requirements:

– 2 slings of equal length.

– Length of at least 1 m (3.3 ft) per sling.

– Load capacity of at least 1,000 kg (2,205 lbs) per lifting sling.

– All lifting gear must be undamaged.

Never use damaged lifting gear. Immediately replace damaged lifting gear.



There is a designated lifting point for the device in the immediate vicinity of the label.

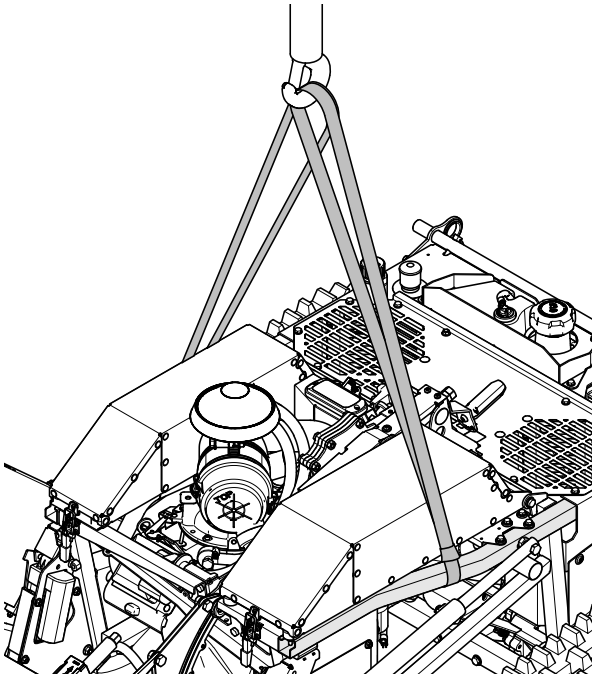

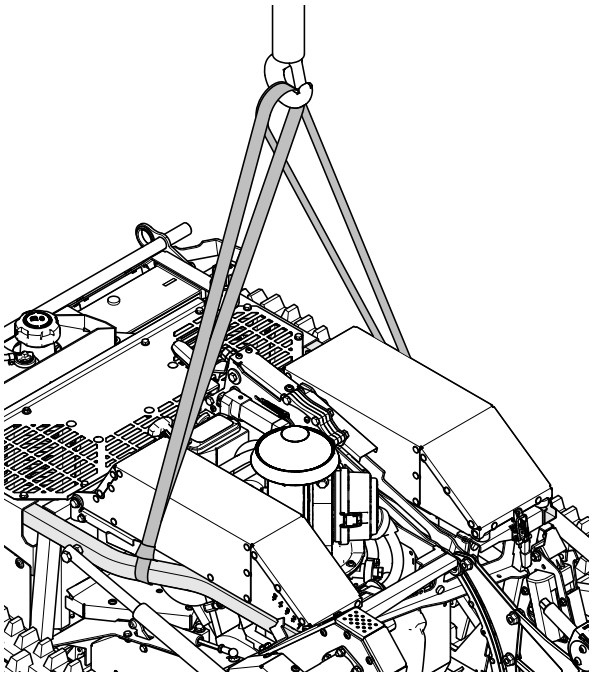

1. Press the start-stop switch on the transmitter. Switch off the device at the main switch and remove the key.
2. Secure the lifting gear to the frame of the device so that they cannot slip.
3. Attach the other ends of the lifting gear to a suitable hoist.
4. Lift the device slowly and evenly. Avoid jerky movements. Ensure that the weight is evenly distributed so that the device does not tip over.
5. Only lift the device as high as necessary. Ensure that the swivel range is clear.
6. Observe local regulations for lifting loads.

Maintenance

Danger

Danger of poisoning due to poisonous exhaust gases.

- ► Do not operate the engine in closed or insufficiently ventilated rooms.
- ► Please observe the safety instructions regarding the poisoning risk.

Warning

Burn hazard from hot surfaces.

- ► Switch off the engine.
- ► Let the device cool down for at least 20 minutes before you start any maintenance and cleaning work.

Warning

Risk of injury caused by unexpected movement. When tests are carried out, the device can move unexpectedly.

- ► Make sure that no persons, children, animals or objects are in the danger area.
- ► Immediately press the start-stop switch on the transmitter and the Emergency Stop on the device if an unexpected movement occurs.
- ► Make sure that no further hazards result from an unexpected movement.

Warning

Risk of injury during maintenance and cleaning work when the engine is running.

- ► Perform maintenance tasks only then with a running engine if this is required in the Maintenance table.

Prior to all maintenance and cleaning work when the engine is not running:

1. Press the start-stop switch on the transmitter.
2. Switch off the device using the main switch.
3. Pull off the key.
4. Let the device cool down for at least 20 minutes.

Improper maintenance can make the device unsafe for operation and result in accidents. Regular maintenance keeps your device ready for use.

Service the device according to the following maintenance instructions.

Contact an authorized service center if problems during maintenance occur or if you determine deficiencies during one of the following inspections.

Maintenance overview

The following chapters contain additional descriptions of the actions in the maintenance overview.

For maintenance and cleaning work, always wear safety gloves and safety glasses.

Component	Action	Maintenance interval	
		A	B
Device	Clean (see chapter “Cleaning the device”).	■	
	Perform basic inspection.	■	▲
Mower	Clean (see chapter “Cleaning the mower unit”).	■	
Flammable material	Remove easily flammable debris buildup from the engine and the device.	■	▲
Chassis and impact protection	Check for rust and fissures and check the welding seams.	■	▲
	Are all protective devices and covers in place, fastened correctly and properly functioning?	■	▲
Label	Check the condition of the labels and replace if necessary.	■	▲
Fuel	Check fuel level.	■	
	Is the tank cap closed?	■	
Tank and fuel line	Check parts for leaks and check for good condition.	■	▲
Ventilation grid	Clean.	■	▲
Engine cooling	Clean.		▲
V-belt and belt covers	Are the belts tensioned correctly, without fissures, and in good condition?		▲
	Clean (e.g. gras remains, dirt)		▲
Bowden cables	Check for proper function and ease of movement.	■	▲
Throttle lever	Check for proper function.	□	▲
Receiver and transmitter	Check.	■	▲
Main switch	Check.	■	▲
Safety function	Checking start-stop switch.	□	▲
	Checking the Emergency stop switch.	□	▲
	Checking maintenance and cleaning position of the blade.	□	▲
	Checking the automatic blade switchoff.	□	▲
RC functions	Check that the receiver and transmitter are ready for operation.	□	▲
	Checking the traction drive.	□	▲
	Checking steering when stationary.	□	▲
	Check steering trim.	□	▲
	Checking steering while driving.	□	▲
	Check cutting height and blade coupling.	□	▲
	Check the transport position.	□	▲
Parking brake	Check parking brake.	■	▲
Blade and fastening components	Check for wear and damage (see chapter “Checking the blade and flail shaft”).	■	▲
	Change.		▲
	Clean the screw-on point of the knife blade.	■	
Blade brake clutch	Does the blade function safely and does the blade stop in 7 seconds?	□	▲

Tracks	Check for wear.	■	▲
	Check the tension.	■	▲
Track wheels and rollers	Clean (see chapter “Cleaning track wheels and rollers”).	■	
Engine	Binding information (see operating instructions of the engine manufacturer).	■	▲
	Check the oil level (see operating instructions of the engine manufacturer).	■	▲
	Oil change (see operating instructions of the engine manufacturer).		▲
	Oil filter change (see operating instructions of the engine manufacturer).		▲
Air filter	Maintain (see operator’s manual of the engine manufacturer).	■	■▲
Spark plug	Check/replace (see operator’s manual of the engine manufacturer).		▲
Gearbox	Check the oil level.		▲
Battery of the device	Check the charging conditions.		▲
Hydrostatic transmission	Check oil level.		▲
	Check for leaks.	■	▲
	Oil change after 50-100 h and every 200 h thereafter.		▲
Grease lubrication	Lubricate lubrication points.	■	▲■

A Before and after each use.
B Once a year or every 50 h.
■ By the operator when the engine is not running.
□ By the operator when the engine is running.
▲ By the authorized service center.

Maintenance and cleaning position

Warning

Risk of injury due to the heavy weight of the device. The device can fall over and fall down and cause severe injuries.

► Observe the following notices.

To perform maintenance, repair or cleaning tasks on the bottom of the device, you can lift or tilt the device.

– Lift the device only when on level and firm terrain.

– Use only lifting gear or ramps that are suitable for the weight of the device.

– Attach the lifting gear only to the main frame because only the main frame can carry the weight.

– Secure the device always against tilting, falling down or slipping.

– Do not stay in the tilting area of the device.

– Do not tilt the device more than indicated in the safety instructions regarding driving on the slope. Otherwise the device can tilt and the device can be damaged or contaminations can occur due to leaking fluid.

– Do not carry out tasks that can result in tilting, falling down or slipping of the device.

Cleaning the device

Notice

The penetration of water or the use of aggressive cleaning agents can cause damage to electrical components and the device.

► Do not clean the device with water spray or high-pressure cleaner.

► Do not use any aggressive cleaning agents.

Notice

Risk of overheating due to contamination of hydrostatic transmission, transmission fan and drive actuators.

Contamination impairs heat dissipation and can lead to overheating. This may result in malfunctions or damage to the device.

► Always keep the area around the hydrostatic transmission, transmission fan and drive actuators free of dirt.

Depending on use, clean the device thoroughly, especially the bottom and the blade.

Fire hazard! Take particular care that the components at the muffler are clean.

For cleaning, use a hand brush. Remove stubborn dirt with a wooden or plastic spatula. Clean the outside housing parts with a cloth.

Carefully remove loose dirt by vacuuming or controlled blowing with compressed air.

Cleaning the mower unit

Notice

Cleaning agents damage the mower unit.

► Clean the mower unit with water only.

► Do not clean the device with water spray or a high-pressure cleaner!

Clean the mower immediately after mowing. Avoid that the dirt dries up and is difficult to remove.

Grass build-up and dirt that are stuck interfere with the grass ejection and impair the cutting quality.

1. Switch off the engine and wait until the blade comes to a standstill.
2. Let the device cool down completely, to prevent premature damage of components (e.g. ball bearings).
3. Turn the cutting height limitation until the blade is in maintenance and cleaning position.
4. Clean the mower with water. A strong water jet improves the cleaning effect.

Cleaning engine cooling

A dirty ventilation grid causes overheating of the engine which can result in engine damage. To sufficiently cool the engine, keep the engine cover, ventilation grid and engine clean.

Keep the ventilation grids free of dirt even during operation.

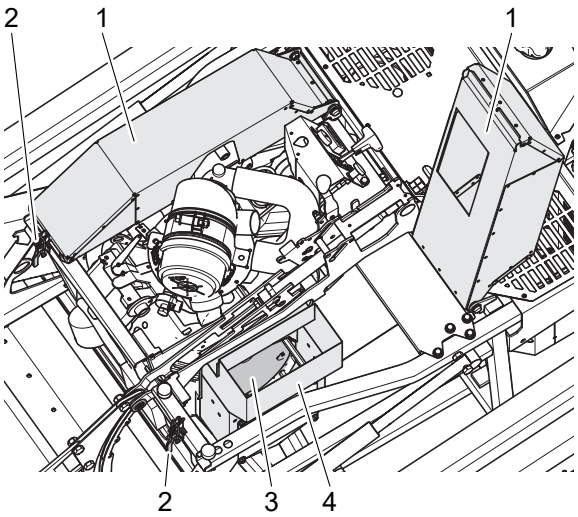

1. Switch off the engine.
2. Remove dirt from both ventilation grids (**1**).
3. Release the tension lock (**2**) and open the ventilation grid (**1**).
4. Clean the round cooling air grille (**3**) of the engine.
5. Clean the cooling air duct (**4**), especially the inside.
6. Close the ventilation grid (**1**) and secure it with the tension lock (**2**).

Cleaning track wheels and rollers

Notice

Risk of damage caused by deposits on the track wheels and rollers.

Deposits cause increased track tension and excessive wear of the rollers.

► Remove deposits according to the following instructions.

Clean the track wheels and rollers immediately after mowing. Avoid that the dirt dries up and is difficult to remove.

1. Switch off the engine.
2. Let the device cool down completely, to prevent premature damage of components (e.g. ball bearings).
3. Remove deposits from the track wheels and rollers. Make sure you clean the grooves on the rollers.

General inspection

To make sure that the device can be operated safely, check all nuts, bolts, screws, connection of fuel lines, air filters etc. regularly for firm seating. Check the ignition wire and the spark plug connectors for damage.

Immediately replace damaged or worn parts, especially covers, protection skirt, muffler or fuel tank (authorized service center).

Check all parts that that contain fluids for leaks and proper condition. These can be: Fuel tank, fuel valve, fuel lines, carburetor, engine, gears, battery, hydraulic system.

In case of leaks, contact an authorized service center.

Check receiver and Remote Control Transmitter

Check the transmitter and the control elements of the transmitter for function and damage. Damage can allow moisture to penetrate and lead to malfunctions.

Check the transmitter especially for

– Proper function of the control elements.

– Damage to the rubber sleeves of the control elements.

– Damage to the housing and display.

In the event of damage or malfunction, immediately contact an authorized service center.

Have the receiver and transmitter checked regularly by an authorized service center. Please note that local regulations may apply.

Special local requirements may apply when using the device commercially. If necessary, check with local authorities.

Checking the USB socket on the receiver

The USB socket on the receiver is closed with a rubber plug. Water penetration into the USB socket can cause corrosion and damage to the receiver.

Check that the rubber plug is undamaged and firmly connected to the receiver.

Ensure that the USB socket is closed with the rubber plug at all times.

Checking main switch

1. Switch on the device using the main switch.
   ⇨ The LED “POWER” on the receiver must light up.
2. Switch off the device using the main switch.
   ⇨ The LED “POWER” on the receiver must go out.
3. Remove the key from the main switch.
   ⇨ The key must only be removable in position 0.

Checking the safety functions

Warning

Risk of injury caused by unexpected movement. When tests are carried out, the device can move unexpectedly.

- ► Carry out the tests on a sufficiently large and clear area without obstacles.
- ► Make sure that no persons, children, animals or objects are in the danger area.
- ► Observe the safety instructions at the beginning of the chapter “Maintenance”.

Warning

Risk of injury from the rotating blade and ejected objects.

- ► Make sure that no persons, children, animals or objects are in the danger area.
- ► Keep your hands and feet away from the rotating parts.
- ► Only engage the blade when it can rotate freely and does not touch objects or the ground.

Contact an authorized service center if you notice any abnormal behavior during the tests.

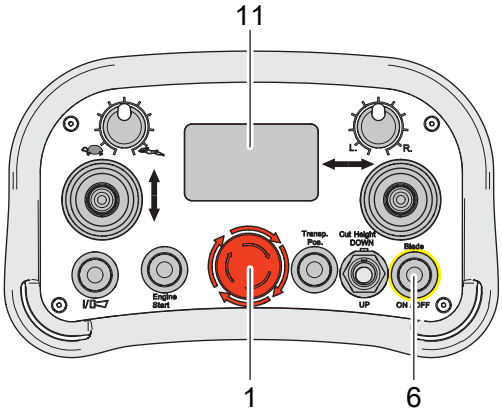

Preparation

1. Switch on the transmitter and the receiver.
2. Start the engine.
3. Drive on large, open and level terrain.

Checking start-stop switch

1. Press the button “Blade clutch” (**6**).
   - ⇨ The blade must be engaged.
2. Drive slowly forward.
3. Press the start-stop switch (**1**) on the transmitter.
   - ⇨ The blade must be disengaged.
   - ⇨ The engine must stop.
   - ⇨ The status indicator must stop flashing.
   - ⇨ The drive goes to neutral position, the parking brake is active.
   - ⇨ Engine start, drive and blade clutch must no longer be operable via the Remote Control Transmitter.

Checking the Emergency stop switch

1. Press the button “Blade clutch” (**6**).
   - ⇨ The blade must be engaged.
2. Press the Emergency stop switch on the device.
   - ⇨ The blade must be disengaged.
   - ⇨ The engine must stop.
   - ⇨ The status indicator must stop flashing.
   - ⇨ The drive goes to neutral position, the parking brake is active.
   - ⇨ Engine start, drive and blade clutch must no longer be operable via the Remote Control Transmitter.

Checking maintenance and cleaning position of the blade

1. Press the button “Blade clutch” (**6**).
   - ⇨ The blade must be engaged.
2. Turn the cutting height limitation until the blade is in maintenance and cleaning position.
   - ⇨ The cutting height indicator must be above 5.
   - ⇨ The blade must be disengaged.
   - ⇨ The status indicator must stop flashing.
   - ⇨ Now the blade should not engage.

Checking the automatic blade switchoff

1. Press the button “Blade clutch” (**6**).
   - ⇨ The blade must be engaged.
2. Do not activate any control element on the Remote Control Transmitter for 2 minutes.
   - ⇨ The blade must be switched off automatically after these 2 minutes.
   - ⇨ The status indicator must stop flashing.
   - ⇨ In the display (**11**) the error code “C2” must be displayed.

Checking the RC functions

Warning

Risk of injury caused by unexpected movement. When tests are carried out, the device can move unexpectedly.

- ► Carry out the tests on a sufficiently large and clear area without obstacles.
- ► Make sure that no persons, children, animals or objects are in the danger area.
- ► Observe the safety instructions at the beginning of the chapter “Maintenance”.

Warning

Risk of injury from the rotating blade and ejected objects.

- ► Make sure that no persons, children, animals or objects are in the danger area.
- ► Keep your hands and feet away from the rotating parts.
- ► Only engage the blade when it can rotate freely and does not touch objects or the ground.

The RC functions are tested while the engine is running.

Contact an authorized service center if you notice any abnormal behavior during the tests or if, for example, the steering trim cannot be adjusted correctly.

The control may need to be calibrated by an authorized service center or there may be mechanical problems.

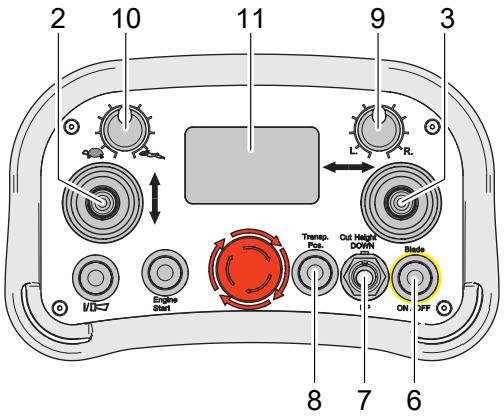

Check that the transmitter and receiver are ready for operation

1. Switch on receiver and transmitter as described in chapter “Switching on receiver and transmitter”.
   - ⇨ The horn sounds must be audible as described.
   - ⇨ The display (**11**) must show the displays as described.
   - ⇨ The LED “POWER” on the receiver must light up.
   - ⇨ The LED „STATUS“ on the receiver must light up.
   - ⇨ The LED „ERROR“ on the receiver must not light up.
   - ⇨ The LED „RADIO“ on the receiver must light up.

Checking the traction drive

1. Switch on the transmitter and the receiver.
2. Set the rotary knob “travel speed” (**10**) to rabbit.
3. Start the engine.
   - ⇨ The device must be stopped.
4. Pull the throttle lever all the way up.
   - ⇨ The engine is at low idle.
5. Press the left joystick (**2**) forward.
   - ⇨ The device must move forward.
6. Press the left joystick (**2**) backwards.
   - ⇨ The device must move backwards.
7. Release the left joystick (**2**).
   - ⇨ The device must stop and stand still.
8. Set the rotary knob “travel speed” (**10**) towards Turtle.
9. Press the left joystick (**2**) forwards or backwards.
   - ⇨ The more you turn the rotary knob “travel speed” (**10**) towards Turtle, the lower the maximum achievable speed must be.

Perform all further tests exclusively with idle throttle.

Checking steering when stationary

1. Set the rotary knob “travel speed” (**10**) to rabbit.
2. Press the right joystick (**3**) slowly to the left.
   - ⇨ The device rotates slowly on the spot to the left. The left track moves backwards, the right track moves forward.
3. Press the right joystick (**3**) slowly to the right.
   - ⇨ The device rotates slowly on the spot to the right. The left track moves forward, the right track moves backwards.

The further you push the right joystick (**3**), the faster the device rotates.

Checking and adjusting steering trim

When steering while stationary, the steering trim has no effect.

1. Slowly press the left joystick (**2**) forward.
   - ⇨ The device should move straight forward.
2. When the device moves to the left:
   Turn the rotary know “Trim steering” (**9**) to the right until the device drives straight ahead.
3. When the device moves to the right:
   Turn the rotary knob “Trim steering” (**9**) to the left until the device moves straight ahead.

Checking steering while driving

1. Press the left joystick (**2**) slowly forward – the device must move forward.
2. Press the right joystick (**3**) slowly to the left.
   - ⇨ The device curves to the left.
3. Press the right joystick (**3**) slowly to the right.
   - ⇨ The device curves to the right.

The function of the steering depends on the driving speed.

– If you press the joystick (**3**) completely during high speed, the device curves.

– If you completely press the joystick (**3**) at a slow driving speed, the curve-inner track moves backwards.

Checking cutting height and blade clutch

1. Turn the cutting height limit all the way to the “–“ mark.
2. Press the toggle switch “cutting height” (**7**) forwards and backwards.
   - ⇨ The cutting height must change.
   - ⇨ The cutting height display on the device must show the cutting height.
3. Press the button “Blade clutch” (**6**).
   - ⇨ The blade must be able to be engaged and disengaged at any cutting height.
   - ⇨ When the blade is engaged, the indicator light must flash.

Check transport position

1. Press the button “Blade clutch” (**6**).
   - ⇨ The blade must be engaged.
2. Press the button “Transport position blade” (**8**).
   - ⇨ The blade must be disengaged.
   - ⇨ The blade must move to the highest cutting height.
   - ⇨ The cutting height display on the device must be set to 5.
   - ⇨ The status indicator must stop flashing.

Checking the parking brake

Warning

If the parking brake is not properly adjusted, the device can roll away.

► Make sure that the parking brake always functions correctly.

1. Drive the device uphill into terrain with a 30° to 40° slope.
2. Stop the device.
   ⇨ The device must remain stationary and not roll downhill.

If the tracks lock up, the parking brake is set correctly.

If the device moves, the parking brake must be readjusted by an authorized service center.

Checking the blade and flail shaft

Warning

Wear or damage on the blades and the fastening elements can result in the blades or the fastening elements coming off.

► Check the blades and all fastening elements according to the following instructions.

Warning

There is a considerable risk of injury due to improperly mounted and maintained blades.

► Work at blades must be carried out by an authorized service center.



Use solid gloves when you check the blade.

Working with the blade and the blade shaft requires special skills and therefore may only be carried out by an authorized service center.

Check the blade, the flail shaft and all fastening elements for completeness, wear, damage and cracks

– each time before and after you mow.

– in case of noticeable changes or unusual vibrations.

Contact an authorized service center if you detect faults or damage during inspection.

All shown blade parts and their fastening elements must be changed

– if damage or cracks are detected.

– if unusually strong vibrations occur.

– at least once a year or every 50 operating hours, no matter if wear does exist or not.

The material weakens, can suffer cracks, endangering people and material assets. Ejected broken pieces can cause severe injuries.

Unusual vibrations are an indication that

– blades are missing or broken,

– the blade is worn excessively or on one side or

– damage to the engine or cutter deck fastening.

Changing the flail blades

Warning

Blades cannot and must not be sharpened. There is a considerable risk of injury due to improperly maintained blades.

► Always replace a damaged or worn blade with a new replacement blade.

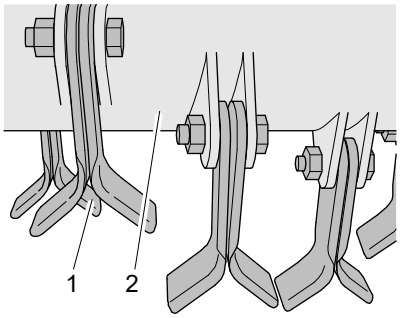

<u>New blade</u>

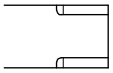

<u>Replacing the blade</u>

- broken

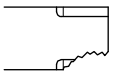

- bent

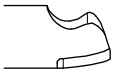

- worn on both sides

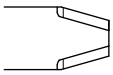

<u>Turning over the blade</u>

- worn on one side

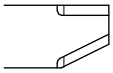

The flail blades (**1**) can be mounted to both sides. Turn all flail blades over together when:

– one side is worn and

– when the other side of the flail blade has not yet been used.

Replace a flail blade when the blade is:

– broken,

– torn,

– bent or

– worn on both sides.

In case of uneven wear, there is a risk of imbalance.

Replace all flail blades together when more than 2 flail blades are damaged or worn.

For each blade change, check the flail shaft (**2**) for damage and cracks.

Always have a new spare blade ready.

Original blade

An original blade is engraved with:

AS G90180003

Replacement blade

Contact your Gravely dealer to purchase replacement blades for your device.

Description	Quantity	Part No.
Flail blade with fastening part	1	54900100
Flail shaft (kit) with 28 flails	1	54901100

Checking the fastening elements and the flail shaft

Warning

Wear or damage at the flail shaft and the fastening elements can result in the flail blade or the fastening elements coming off.

► Check the flail shaft, mounting plates, fastening screws and corresponding nuts of the flail blades.

Notice

Over-tightening the fastening elements could damage the fastening elements and fastening straps.

► When tightening new fastening elements, tighten the nuts snug to the fastening straps. Do not over-tighten the fastening elements.

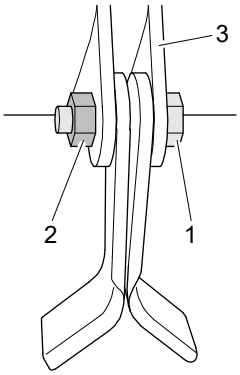

The fastening elements are worn down during mowing. Replace the fastening screws (**1**) and the corresponding nuts (**2**),

– if they are worn by more than 0.04 in (1 mm) in diameter and

– for each blade change.

Only use original spare parts.

For each blade change, check the flail shaft for damage. The fastening straps (**3**) must not be damaged, bent or knocked out. Contact an authorized service center if damage, cracks or wear have occurred.

Checking the blade brake clutch

1. Start the engine (see chapter “Starting the engine“).
2. Move on a terrain where the blade can rotate freely and does not touch objects or the ground.
3. Make sure that nobody is in the danger area of the device.
4. Turn the throttle lever to the maximum engine speed.
5. Engage the blade.
6. Disengage the blade.
   - ⇨ The blade must stop from maximum speed in less than 7 seconds.
   - ⇨ The status indicators on the device must go out.

Checking tracks

Checking the condition of the tracks

Check the tracks for completeness, wear, damage and cracks.

– each time before and after you mow.

Contact an authorized service center if you determine faults or damage during the inspection.

The tracks must be changed

– If damage or cracks are found.

– if the cleats of the tracks are worn out.

– if the steel cables of the tracks are exposed.

– if broken steel cables are visible.

Change the tracks in pairs.

Checking track tension

Notice

Risk of damage due to incorrectly tensioned tracks.

Excessive track tension will damage the frame of the device, the track drive and the tracks.

Tracks that are not sufficiently tensioned can detach from the device during travel.

► Always make sure that the tracks are correctly tensioned.

► Always tension the tracks in accordance with the following instructions.

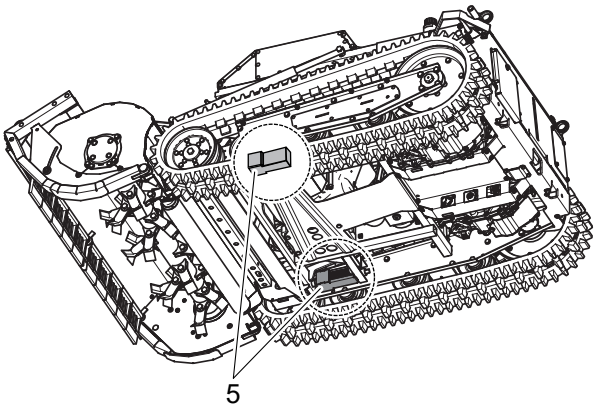

Correct track tension protects the tracks and the frame of the device from overload.

Each track is tensioned via a spring assembly (**5**). The spring pack (**5**) is accessible from above.

Devices without spring box:

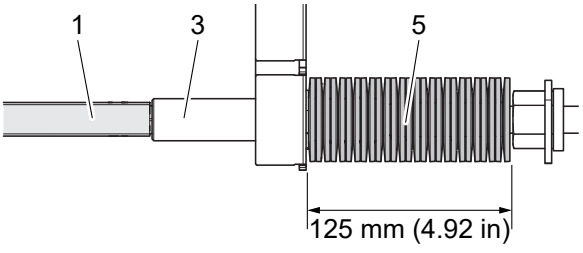

The track tension is set correctly if the length of the spring pack (**5**) is 125 mm (4.92 in).

Devices with display on the spring box:

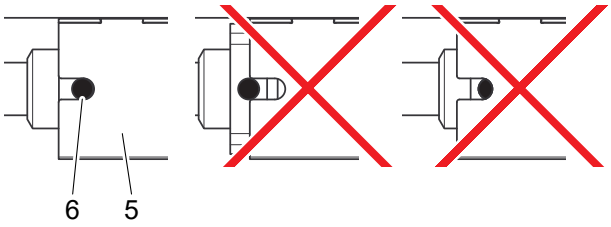

The countersink (**6**) indicates the current track tension. The track tension is correctly adjusted when the countersink hole aligns with the end of the recess in the spring box (**5**).

Tensioning tracks

You can carry out the work described below while the device is standing on a level surface.

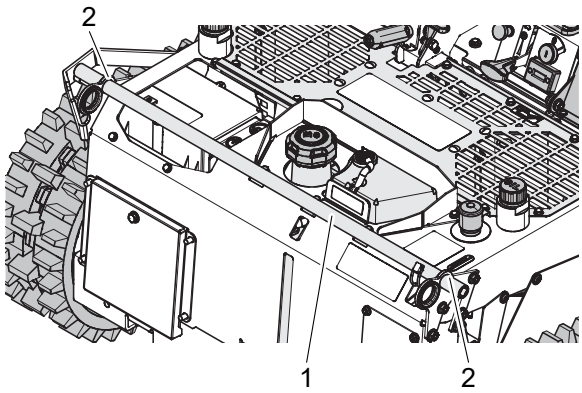

1. Loosen the securing splint and remove the extension (**1**) from the holder (**2**).

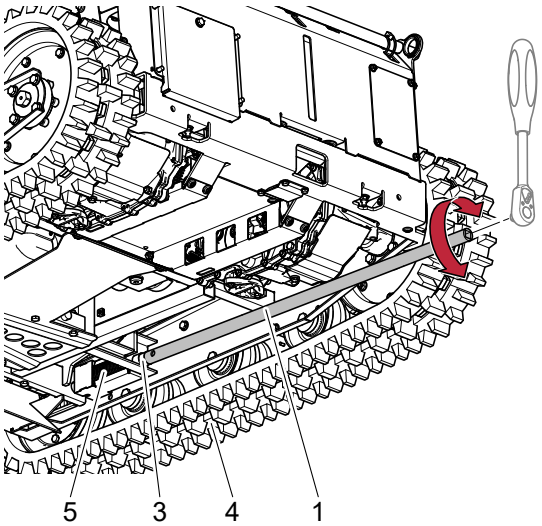

2. Insert the extension (**1**) from the back of the device and pass it under the device.
3. Set the extension (**1**) on the square (**3**).
4. Place a 1/2″ socket wrench handle on the extension (**1**) and turn the square (**3**) clockwise to tension the track (**4**).
5. **Devices without spring box:**
   Tension the track so that the spring pack (**5**) has a length of 125 mm (4.92 in).
6. **Devices with display on the spring box:**
   The track tension is correctly adjusted when the countersink hole (**6**) aligns with the end of the recess in the spring box (**5**).
7. Tension the other track in the same way.
8. Put the extension (**1**) back into the holder (**2**) and fasten it with the securing splint pin.

Maintaining the engine

Danger

The ignition system generates an electromagnetic field.

► Wearers of pacemakers must not work on active parts.

Warning

Burn hazard from hot surfaces.

► Switch off the engine.

► Let the device cool down for at least 20 minutes before you start any maintenance and cleaning work.

Caution

If the speed is set too high, objects can be ejected. The engine can be damaged and a higher level of noise pollution is produced.

► Do not change the basic setting of the carburetor or the speed control.

The engine manufacturer has prepared the operating manual of the engine. The manual contains all maintenance requirements and warranty conditions for the engine. If warranty work at the engine is required, contact your authorized service center or the next authorized dealer for engines.

To ensure a long service life of the engine, sufficient engine cooling is required.

Keep the
- engine cover (ventilation grid),
- muffler (protective grid) and
- cooling fins of the engine

clean at all times.

Checking the engine oil level

Notice

Incorrect oil level can damage the engine.

► Prior to each use, check the engine oil level.

The oil level may never be too low; otherwise, the engine can be damaged. When moving on slopes, the oil level should always be at the top level.

Never fill in too much oil. Otherwise, there is a risk that oil enter the air filter and destroys it.

Observe the information in the operator's manual of the engine manufacturer.

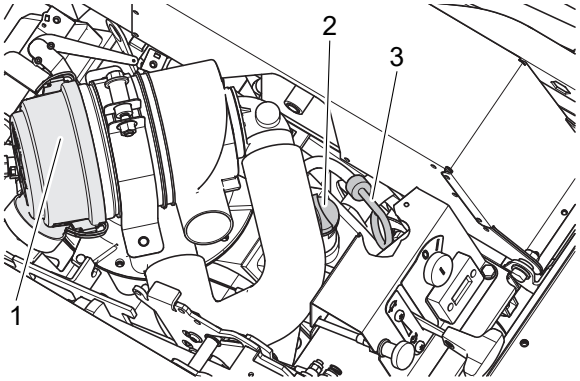

1: Air filter

2: Oil filler neck

3: Oil dipstick

Check oil level of the gearbox

Notice

Incorrect oil level can damage the gearbox.

► Prior to each use, check the oil level.

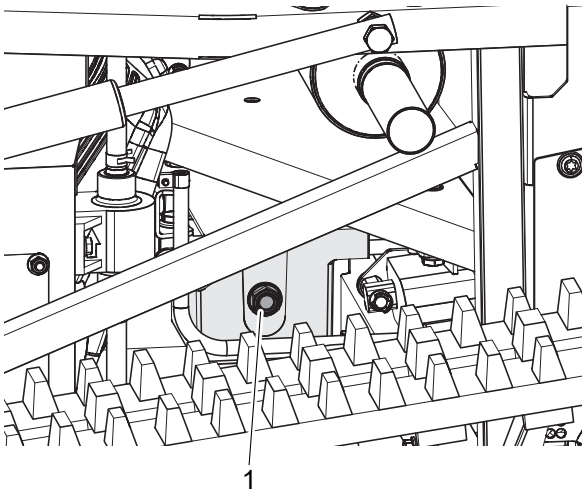

Place the device for 30 minutes on a level surface before you check the oil level.

The inspection glass (**1**) should be at least 1/2 full of oil.



If the oil level is lower than 1/3 of the inspection glass, damage to the gearbox due to overheating can result.

Contact an authorized service center when the oil level is too low.

Maintaining the air filter

Warning

There is a fire and explosion risk due to cleaning agents.

► Never clean the air filter with flammable solvents.

Make sure that the air filter is always clean. A dirty air filter reduces the engine power and leads to increased engine wear and fuel consumption. Independent of the operating hours, change the filter insert at least once a year. Do not operate the engine without air filter.

Observe the information in the operator's manual of the engine manufacturer.

Checking and charging the battery

Warning

Batteries can be dangerous.

► Keep children away.

► Never perform any changes to the battery.

► The battery is sealed and may never be opened.

► For all work on the battery or the battery cables, wear safety glasses and gloves.

► If accidents with battery acid occur, always contact a doctor.

Warning

Explosion hazard

When the battery is charged, explosive gases are generated. An explosion of the battery can result in injuries and blindness.

► Keep open flames and ignition sources away and do not smoke.

► Charge the battery only in well ventilated rooms.

Warning

Danger of chemical burn

Batteries contain acids. Contact with battery acid can result in blindness or serious burns.

► Always keep the battery upright and do not spill any battery acid.

► Avoid contact with skin and eyes.

► If battery acid comes into contact with eyes, immediately rinse with water.

Warning

When you work on the battery, there is a risk of short circuit.

► Do not put any tools or metal objects onto the battery.

► When disconnecting and connecting the battery, observe the order of assembly steps.

Notice

Work on the battery can damage the receiver.

► Press the start-stop switch on the transmitter. Switch off the main switch on the device and pull off the key before you start working on the battery.

During operation, the battery voltage of the device is displayed on the display of the Remote Control Transmitter.

If the starter does not get the engine going or only insufficiently, charge the battery.

Use electronically controlled charging systems. These charging systems detect the connected battery and charge it with the required charging current and terminate the charging process when the battery is fully charged.

Optional: Use a charger that is equipped with a 12 V connection for standard norm outlets. Insert the plug for charging into the standard norm outlet.

Charge the battery and disconnect the ground cable before you put the device away for winter storage.

Notice: Do not store the battery in freezing temperatures.

Exchanging the battery

Warning

When you work on the battery, there is a risk of short circuit.

► Do not put any tools or metal objects onto the battery.

► When disconnecting and connecting the battery, observe the order of assembly steps.

To work on the battery, it may be necessary to remove covers or battery mountings. This may vary depending on the device.

Observe the safety instructions. Only carry out the work if you can do so safely. Contact an authorized service center if you are unable to carry out the work safely or if problems arise.

Important: Only use original batteries.

You can buy original batteries from your dealer. Also observe all information in the operator's manual of the battery (if existing).

Beware! Never confuse the plus and minus terminals.

1. Disconnect the black cable (-).
2. Disconnect the red cable (+).
3. Dismantle the battery from the device.
4. Mount the new battery into the device.
5. Connect the red cable (+).
6. Connect the black cable (-).

Hydrostat transmission

Warning

Risk of injury due to high pressure in the hydraulic system.

► Check the hydraulic drive system for leaks, damage and chafe points.

Warning

When oil leaks there is a danger of environmental pollution.

► Check the hydraulic drive system for leaks before and after mowing.

Oil changes must be carried out by authorized service center (see chapter “Maintenance overview”).

Check if the transmission fan is undamaged.

The hydrostatic drive generates a monotone working noise that gets louder as the load is increased (e.g. in steep terrain). If the working noise changes, if it gets irregular or very loud, let the hydrostatic drive cool down. If the changed working noise still exists, have the device checked by an authorized service center.

Grease lubrication

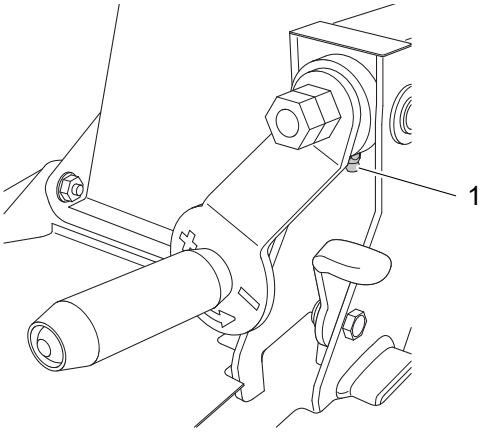

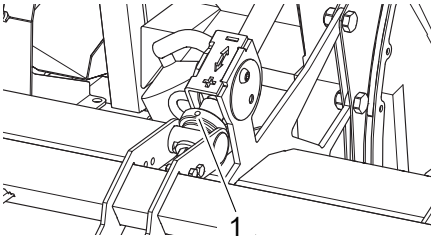

A grease nipple (**1**) is attached to the cutting height adjustment and the cutting height limitation.

1. Clean the lubricating fittings.
2. Lubricate the lubricating fittings with a grease gun (1-2 strokes pressure-resistant grease).
3. Remove excess grease that has been pressed out of the bearing points.
4. Clean the spindles, especially if they are dirty or sluggish.
5. Grease the spindles.

Assembly

Scope of delivery

The device is shipped in a crate. The scope of delivery includes:

– The device.

– The transmitter with batteries and belts.

– Key for main switch.

– Rain cap for air filter.

– Tool bag with small parts.

– This operating manual.

– Manufacturer's certificate.

– Operator's manual of the engine manufacturer.

Unpacking

Read and understand the information in chapter "Safety instructions" before proceeding.

Before use, follow the instructions in chapter "Prior to starting".

1. Cut off all packaging cables on the unit and discard them.
2. Remove packaging materials from the unit and discard them.
3. Remove the unit and all other components from the shipping container.

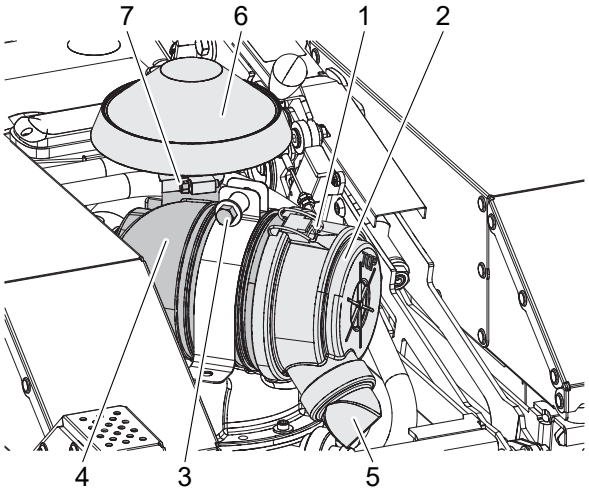

4. Loosen the catches (**1**) and remove the lid (**2**).
5. Loosen the screw (**3**) and turn the housing (**4**) until the intake nozzle points upwards. Tighten the screw (**3**).
6. Secure the lid (**2**) so that the water drain (**5**) points downwards. Close the catches (**1**).
7. Place the rain cap (**6**) on the connection piece and tighten the screw clamp (**7**).
8. Check the engine oil level and add oil if needed (see chapter "Checking the engine oil level"). Observe the information in the operator's manual of the engine manufacturer.
9. Fill the fuel tank (see chapter "Fuel" and "Adding fuel").
10. Insert batteries into the transmitter (see chapter "Checking and changing the battery of the transmitter").
11. Remove the spare key and keep it in a safe place.
12. Attach the belt to the transmitter (see chapter "Carrying the Transmitter").
13. Ensure that all parts are firmly tightened.
14. Ensure that all guards are in place and securely fastened.
15. Open the battery compartment at the rear of the device.
16. Connect the red cable to the positive (+) battery terminal and then the black cable to the negative (-) battery terminal.
17. Close the battery compartment.
18. Check the function of all controls.

Storage

Danger

Danger of poisoning due to poisonous exhaust gases.

► Do not operate the engine in closed or insufficiently ventilated rooms.

► Please observe the safety instructions regarding the poisoning risk.

Warning

Fire hazard

Parts of the device can become extremely hot during operation and this may cause fire.

► Please observe the safety instruction regarding the fire risk.

Warning

There is a risk of injury in case of unauthorized use.

► Press the start-stop switch on the transmitter. Switch off the device at the main switch and remove the key.

Notice

Risk of damage to the transmitter due to improper transport and storage. Mechanical stress, moisture ingress or direct sunlight can damage the transmitter and cause malfunctions.

► Secure the transmitter during transport, e.g. against rolling around, falling or other mechanical stress.

► Always transport and store the transmitter protected from rain, moisture and direct sunlight.

Storing the device

Store the device in a locked, dry and sufficiently ventilated room and out of reach of children. Always rectify faults of the device before storage so that the device is always in operationally safe condition. Let the device cool down for at least 20 minutes before you store it.

Also observe the information regarding storage in the operator's manual of the engine manufacturer.

Longer storage

1. Observe the safety instructions for handling the fuel.
2. Observe the recommendations regarding fuel storage in the operator's manual of the engine manufacturer.
3. Run the fuel tank empty.
4. Emptying carburetor: Start the engine and let it run until it stops by itself.
5. Thoroughly clean the device.
6. Touch up any possible damage to the paint finish (for paint, see chapter “Accessories”).
7. Remove the key from the main switch and store it separately from the device.
8. Remove the battery from the device. Charge the battery and store it separately (not when the temperature is below freezing).
9. Remove the batteries from the transmitter.

Before longer storage, e.g. in the fall, have an authorized service center check the device!

Also observe the information regarding storage in the operator’s manual of the engine manufacturer.

Restarting

If you want to start the device after a longer storage, carry out the tasks described in chapter “Maintenance”.

Spare parts

The reliable and safe operation of the device also depends on the quality of the spare parts used. Only use original spare parts and accessories approved by the manufacturer. When foreign parts are installed, the warranty and guarantee shall be void for the foreign parts, the device, and for any resulting damage.

Inform your authorized service center about the device type and serial number of your device when you order spare parts.

Visit www.gravely.com to locate a Gravely dealer for service and spare parts ordering.

Wear parts

Some parts are described as wear parts. They wear during use and must be replaced. The warranty does not cover the following parts (examples):

Blades, cutting edges, cutter bars, blade bolts, sliding plates, V-belts, tracks, Bowden cables, starter ropes, pressure plates, air filters, spark plugs, disk springs, lock washers, fuses, disks, thrust plates, pressure disks, protection skirts, impact protection, wheels, tires, brushes, skids etc.

Disposal

The device cuts and shreds the growth in a single operation. Shredded plant material decomposes quickly and can be used as fertilizer and, therefore, be left on the ground.

Dispose of waste oil and fuel in accordance with the local regulations or return it to an oil shop.

Packaging, device, and accessories are made of recyclable materials and must be disposed of accordingly.



The transmitter as well as its batteries must not be thrown away with regular household rubbish. Dispose of the transmitter via the local take-back system for waste electrical and electronic equipment. Dispose of the batteries at your local battery collection point.

Troubleshooting

If a fault occurs, it is recommended to first switch off the transmitter using the start-stop switch and the device using the main switch. Wait 10 seconds and restart the device. If necessary, also change the radio channel (see chapter “Selecting the radio channel”).

If the fault persists, the following list and the list “Error codes” can help you to detect the faults that occur most frequently and how to eliminate them.

If the fault cannot be eliminated, contact your closest authorized service center.

You can find an authorized service center on our home page under www.gravely.com.

Problem	Possible cause	Remedy
No connection between transmitter and receiver	Radio connection is not established (on the display the “SCAN” mode is shown).	Check LED display on the receiver. Wait until the radio connection is established (the “STOP” mode is shown on the display).
	Transmitter or receiver malfunction.	Check the receiver (authorized service center).
	Battery on the transmitter is empty.	Replace battery.
	Battery on the device is empty.	Charge the battery (see chapter “Checking and charging the battery”) or authorized service center.
	Radio range exceeded.	Reduce distance between transmitter and receiver.
	Radio interference due to other transmitters (radio equipment, garage door opener, vehicle key).	Switch off transmitter and receiver, switch back on after 10 seconds.
		Switch the radio channel.
		Increase the distance to the disturbance source. Remove the disturbance source.
	The Emergency stop switch on the device is activated.	Unlock the Emergency Stop switch.
	Antenna loose, damaged or no longer existent.	Fasten or replace antenna.
No display on transmitter	Transmitter is switched off.	Switch on the Transmitter.
	Battery in the transmitter is low.	Replace battery.
	Battery compartment defective (e.g. corrosion or battery leaked)	Check and clean battery compartment (authorized service center).
Operating time of transmitter too short	Battery in the transmitter is low.	Replace battery.
	Wrong battery inserted.	Insert correct batteries (see chapter “Technical specifications”)
Starter does not turn	An Emergency stop situation occurred.	Eliminate the Emergency stop situation (see chapter “Procedure after an Emergency stop”).
	Fuse is defective.	Replace (if necessary, have authorized service center do so).
	Battery in the device is low.	Charge the battery (see chapter “Checking and charging the battery”) or contact authorized service center.
	Battery in the device is defective.	Replace battery (authorized service center).

Problem	Possible cause	Remedy
Engine does not start	No fuel is in the tank.	Refill fuel.
	Choke is open.	Close the choke.
	Device was tilted – oil leaked into the air filter.	Replace air filter, unscrew spark plug and start several times, dry the spark plug and screw it back in.
	Engine was flooded due to too many start attempts.	Unscrew spark plugs and start several times, dry the spark plugs and screw them back in.
	Spark plug connector is pulled off.	Observe the safety instructions! Put spark plug connector back on.
	Air filter is dirty.	Maintain air filter (see chapter “Maintenance”).
	Spark plugs are sooted, damaged, or incorrect electrode gap.	Clean spark plugs and check electrode gap (see chapter “Maintenance”). Replace spark plugs if necessary.
	Poor quality, dirty, or old fuel.	Clean fuel system (authorized service center). Always use fresh fuel.
Engine starts badly or runs irregularly	Choke is closed.	Open choke (see chapter “Starting the engine”).
	Air filter is dirty.	Maintain air filter (see chapter “Maintenance”).
	Poor quality, dirty, or old fuel.	Always use fresh fuel.
	Spark plug is dirty, damaged, or incorrect electrode gap.	Clean spark plug and check electrode gap (see chapter “Maintenance”). Replace spark plug if necessary.
Engine stops during operation	Battery in the Remote Control Transmitter is empty.	Replace battery.
	Battery in the device is empty.	Charge the battery (see chapter “Checking and charging the battery”) or contact authorized service center.
Device rotates on the spot even though no joystick is being operated.	Thermal protection switch has temporarily switched off the drive actuators. Ventilation grid is dirty.	Press start-stop switch on the transmitter. Allow the device to cool for at least 15 minutes. Clean ventilation grid.
	Drive mechanism locked.	Press start-stop switch on the transmitter. Remove blockage (if required authorized service center).
Device rotates repeatedly on the spot even though no joystick is being operated.	Thermal protection switch has repeatedly switched off the drive actuators. Ventilation grid, area around the hydrostatic transmission, transmission fan and drive actuators dirty or transmission fan damaged.	Press start-stop switch on the transmitter. Allow the device to cool for at least 15 minutes. Clean ventilation grid, area around the hydrostatic transmission and drive actuators and check transmission fan (if required authorized service center).
	Drive mechanism sluggish or drive mechanism actuators damaged.	Press start-stop switch on the transmitter. Allow the device to cool for at least 15 minutes. Authorized service center.
Device does not move	Rotary knob limit speed is set to “turtle”.	Adjust rotary knob limit speed.
	Hydrostatic drive is overheated.	Cool down (see chapter “Maintenance”).
Blade cannot be engaged	Mower in maintenance and cleaning position.	Move mower to desired cutting position.
	V-belt is damaged.	Authorized service center.
Blade cannot be disengaged	Blade coupling jammed or defective.	Authorized service center.
The blade does not rotate	V-belt is insufficiently tensioned or damaged.	Authorized service center.
	Bowden cable is defective.	Authorized service center.

Problem	Possible cause	Remedy
Strong vibrations during operation	Imbalance due to missing, broken, chipped or unevenly worn blades.	Check blade and flail shaft (see chapter “Maintenance”).
	Flail shaft is bent due to collisions with foreign objects.	Authorized service center.
	Engine fastening is loose.	Authorized service center.
	Blade fastening is loose.	Authorized service center.
Irregular noises	Loose fastening elements.	Authorized service center.
	Muffler is defective.	Authorized service center.
	Hydrostatic drive is overheated.	Cool down (see chapter “Maintenance”).
Engine is smoking	Air filter is dirty or drenched with oil.	Maintain or replace air filter (see chapter “Maintenance”).
	Oil level is too high.	Have authorized service center lower the oil level to the marking.
Engine gets hot	Ventilation grid is dirty.	Clean ventilation grid.
	Oil level in the engine is too low.	Refill engine oil (see operator’s manual of the engine manufacturer).
	Cooling fins of the engine are dirty.	Have cooling fins cleaned by authorized service center.
Unclean cut	Blade is dull or worn.	Have damaged blades replace immediately (authorized service center).
	Speed is too high proportionate to the cutting height.	Reduce speed and/or select the correct cutting height.
	Housing of the device is heavily contaminated.	Clean.
	Mower housing is not parallel to the ground.	Adjust (authorized service center).
Mulching result of thick brush not satisfactory	Speed is too high.	Reduce speed.
Mulching result of normal brush not satisfactory	Mulched material is ejected too quickly.	Increase speed.
Housing is jammed	Mowed grass was too long or too damp.	Adjust cutting height and mowing speed to the mowing conditions.
	Blade is worn.	Authorized service center.
	Engine speed is too low despite full power.	Authorized service center.
The device does not stop on steep terrain	Parking brake is adjusted incorrectly, worn, or defective.	Check the parking brake (see chapter “Maintenance”). Authorized service center.
The engine does not switch off	Switching off system is defective.	Authorized service center.
Device does not drive straight forward	Trimming of the steering is misadjusted.	Adjust trimming with rotary knob trimming steering on the transmitter (if required, authorized service center).
	Track outside of tension recommendation.	Tension track correctly.
	Transmission control blocked.	Authorized service center.
	Track idler blocked.	Authorized service center.
Tracks detach from the device	Tracks incorrectly tensioned.	Tension tracks correctly.
	Foreign object in the drive.	Remove foreign object.
	Tracks, sprocket or wheels worn or damaged.	Replace worn or damaged parts (authorized service center).

Error codes

When the receiver detects an error, an error code is displayed on the display of the transmitter.

The following table lists the most frequent error codes. Contact an authorized service center when an error code is displayed that you cannot find in this table.

Display	Designation	Reasons	Remedy
A3	Activate the Emergency stop switch on the device	Emergency stop switch activated.	Unlock the Emergency stop switch by turning clockwise.
A9	Emergency stop caused by inclined position	Emergency Stop due to inclination (maximum slope has been exceeded or the device has tipped over).	Recover device.
		Emergency stop caused by strong vibrations and impacts.	Drive slower in uneven terrain. If necessary, check track tension.
C2	Blade switches off after 2 minutes.	No activation of a transmitter function.	Engaging blade.
F2	Right drive actuator does not move to desired position	Drive lever / rods blocked on the right.	Remove blockage.
		Drive actuator is overheated.	Let the device cool down for at least 15 minutes.
		Drive lever / rods hard to move. Drive actuator/angle sensor defective or cable break.	Check drive lever / rods. Check drive actuator / angle sensor. Check device for cable break. Authorized service center.
F3	Angle sensor driving right	Angle sensor defective or cable break.	Replace defective angle sensor and repair cable. Authorized service center.
F4	Left drive actuator does not move to desired position	Drive lever / rods blocked on the left.	Remove blockage.
		Drive actuator is overheated.	Let the device cool down for at least 15 minutes.
		Drive lever / rods hard to move. Drive actuator/angle sensor defective or cable break.	Check drive lever / rods. Check drive actuator / angle sensor. Check device for cable break. Authorized service center.
F5	Angle sensor driving left	Angle sensor defective or cable break.	Replace defective angle sensor and repair cable. Authorized service center.

Technical specifications

Type	Gravely OVIS-X 40 RC
Range of application (temperature)	0 °C – 30 °C (32 °F – 86 °F) For temperatures below 5 °C (41 °F), observe the engine manufacturer's information regarding the engine oil.
Engine, type Manufacturer Type Cylinder capacity Performance Engine speed	Two-cylinder four-stroke engine Briggs & Stratton Vanguard, V-Twin 627 cm^3 15.5 kW (21.1 PS) 3,600 min^{-1}
Starting device	Electric start
Battery, device	12 V, 22 Ah
Receiver and transmitter Manufacturer Type of control Frequency range Range Battery transmitter Authorization Standards or relevant regulations	 Hatox Wireless proportional mobile control 433 MHz (EU) 300 m 2x AA 1.5 V or 2x AA 1.2 V NiMH batteries (not included) RED, FCC IEC 61508-3, DIN EN 62745:2017-12
Traction drive Speed forward Speed reverse	Crawler track 0 - 5.0 km/h (0 - 3.1 mph) 0 - 5.0 km/h (0 - 3.1 mph)
Maximum area coverage	approx. 5,000 m^2/h (1.2 acres/h)
Turning radius	approx. 0 m (0 in)
Cutting device, type Cutting width Continuous cutting height Maintenance and cleaning position Drive of cutting tool Clutch of cutting tool Growth height	Flail mower unit with 28 Y-knife, can be used on both sides. 100 cm (40 in) 30 - 110 mm (1 - 4 in) 700 mm (27 in) V-belt Belt tension clutch up to approx. 150 cm (5 ft)
Measures and weights Transport size with packaging L/W/H max. operating dimensions L/W/H Weight Ground pressure	 208/130/130 cm (82/51/51 in) 183/144/69 cm (72/45/27 in) 428 kg (944 lbs) 0.155 kg/cm^2 (2.2 psi)
Capacities Fuel tank Engine oil Transmission oil (per device side)	 12 liters (3.17 gallons) 1.7 liters (56 ounces) 5W-50 fully synthetic engine oil (see operating instructions of the engine manufacturer) 2.1 Liter (71 ounces) SAE 5W-50 fully synthetic engine oil
Sound level	according to DIN EN 12733
Measured sound power level L_{WA} Uncertainty factor K_{WA}	103.5 dB (A) 3.0 dB (A)
Measured sound pressure level L_{pA} when operating behind the device Uncertainty factor K_{pA}	 92.0 dB (A) Wear ear protection! 3.0 dB (A)
Measured sound pressure level L_{pA} at a distance of 15 metres Uncertainty factor K_{pA}	 73.6 dB (A) 3.0 dB (A)

Type	Gravely OVIS-X 40 RC
Maximum slope	
crosswise to the slope	55°
uphill and downhill	44°
Angle at which the device flips over	
Measurement method	Measured angle at which the stationary device tips over (mower in highest position, tank full)
crosswise to the slope	61°
uphill and downhill	49°

Fuses

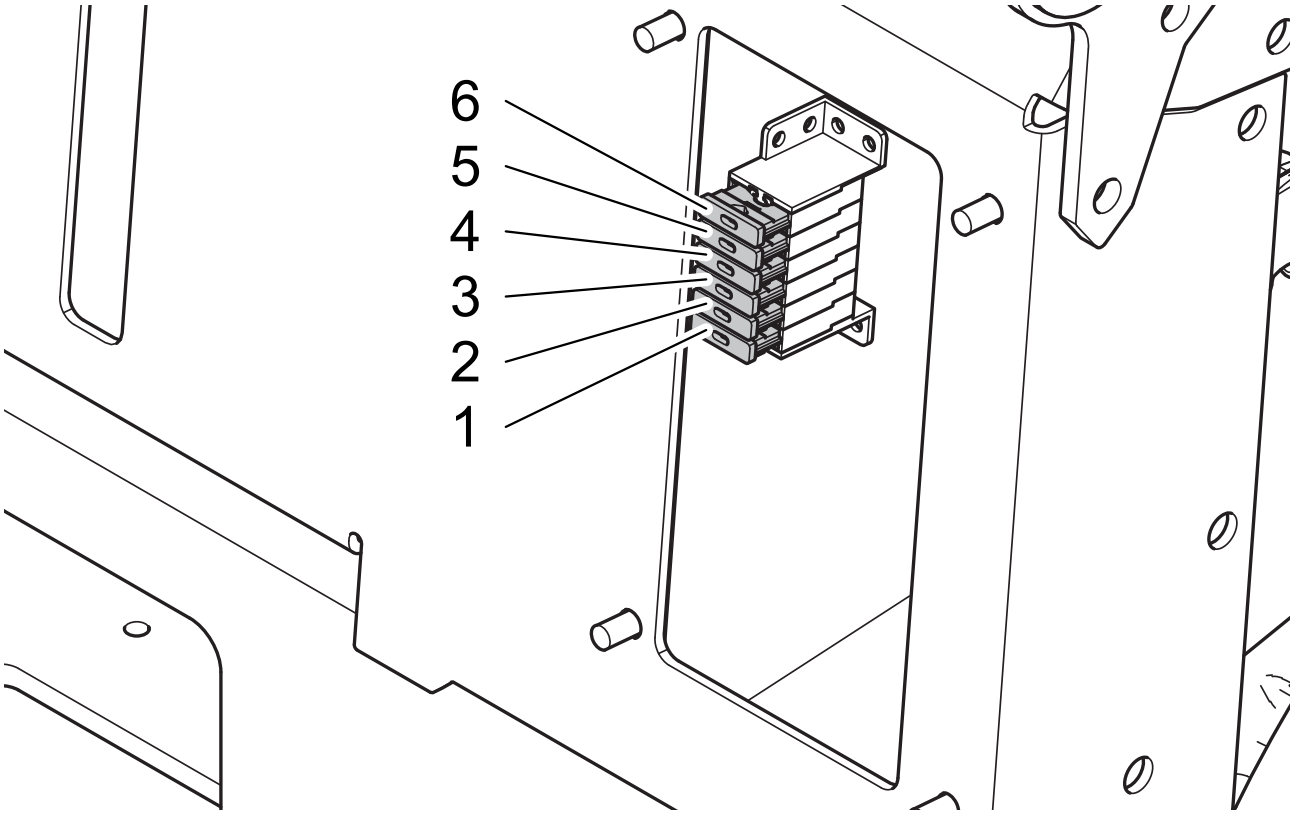

The fuses are located at the rear of the device.

If you experience malfunctions, remove the fuse compartment cover and check the fuses. Replace defective fuses.

Contact an authorized service center if the malfunctions cannot be remedied by replacing the fuses or if the fuses blow again after replacement.

Do not perform any repairs on the electrical system of the device.

Pos.	Rating	Designation	Supplied
1	10A	Main fuse 1	Receiver
2	25A	Main fuse 2	Receiver
3	25A	Main fuse 3	Receiver
4	25A	Fuse controller generator	Generator
5	10A	Fuse fuel pump Emergency stop	Fuel pump Emergency stop
6	10A	Fuse onboard power supply socket	Power socket Ignition

Accessories

Gravely Red Spray Paint Enamel (12 oz. spray can):	00008700
Gravely Red Touch-up Paint (6 oz. bottle):	00026600

Warranty

Outdoor Power Equipment Limited Warranty

AriensCo warrants to the original purchaser that Gravely brand products purchased on or after 09/01/2022 will be free from defects in material and workmanship for the time period noted in the chart below.

If any product, EXCEPT AXIS skidsteer, is rented or leased, then the duration of these warranties shall be 90 days after the date of purchase.

An authorized Gravely dealer will repair any defect in material or workmanship, and repair or replace any defective part, subject to the conditions, limitations and exclusions set forth herein. Such repair or replacement will be free of charge (labor and parts) to the original purchaser; except as noted below. Pick-up and delivery are at the owner's expense.

The warranty code is found on the model and serial number identification label on the unit.

Warranty Code	Product Group	Warranty Period
AA	Serialized Attachments	1 Year.**
AB	Serialized Attachments	2 Years.**
CH	Pro-Turn® Z and Pro-Turn ZX Mowers	4 Years or 750 Hours.*
CJ	Pro-QXT®	4 Years or 500 Hours.*
CK	Compact-Pro® and Pro-Walk® Hydro Mowers	4 Years or 750 Hours.* No Hour Limit for First 2 Years.
CL	Pro-Turn 100 and Pro-Stance® Mowers	5 Years or 1000 Hours.* No Hour Limit for First 2 Years.
CM	Pro-Turn 200 and 300 Mowers	5 Years or 1250 Hours.* No Hour Limit for First 2 Years.
CN	Pro-Turn 500, 600, Mach-One and Pro-Stance Ultra Mowers	5 Years or 1500 Hours.* No Hour Limit for First 2 Years.
CS	AXIS® Skidsteer	1 Year or 1000 Hours.* Includes Rented or Leased Products.
CT	OVIS Mowers	2 Years or 250 Hours.*
HE	ZT Mowers	2 Years or 150 Hours.*
HF	ZT X Mowers	3 Years or 300 Hours.*
HG	ZT XL Mowers	4 Years or 400 Hours.*
HH	ZT HD and Z-Stance Mowers	4 Years or 500 Hours.*
UG	Atlas JSV®	1 Year.

* Whichever comes first.

** AXIS Attachments see Limitations chart below.

Special Extensions

The chart below details special **extensions** to warranty terms. Warranty terms are total time periods covered. If any product is rented or leased, there are no extensions to the 90-day warranty.

Warranty Code	Warranty Term Extension	Warranty Period	Detail
CL, CM, CN	Mower Deck Shell and Main Frame	Lifetime Limited.	Warranty is for parts only after the initial warranty period. Components are covered for manufacturer's defect only, not wear.

Exclusions and Limitations

The charts below detail special **exclusions and limitations** to this warranty.

Warranty Term Exclusions	Warranty Period
Air filters, brake arms, brake linings, brake shoes, brushes, cutters, fuel filters, halogen headlights, knives, halogen light bulbs, lubricants, mower blades, flail blades, oil, oil filters, spark plugs, scraper blades, shear bolts, skid shoes and spoon tines.	Components are not covered under warranty.

Hydro-Gear Transaxle Limitation
See Hydro-Gear warranty. The warranty is administrated by AriensCo. Refer to www.gravely.com for warranty statement.

Warranty Term Limitations	Warranty Period
Cloth, Plastic and Rubber Components. Mufflers, Tires and Belts.	Components are covered for manufacturer's defect only, not wear.
AXIS Bucket and Fork Attachments	Warranty is administered by Erskine Attachments, LLC. Follow Erskine warranty statement in back of Attachment Operator's Manual.

Exclusions – Items Not Covered by This Warranty

– Parts that are not genuine Gravely service parts are not covered by this warranty and may void the warranty if the parts result in premature wear or damage to the product.

– Damages resulting from the installation or use of any part, accessory, or attachment which is not approved by the AriensCo for use with product(s) identified herein are not covered by this warranty.

– Any misuse, alteration, improper assembly, improper adjustment, neglect, or accident which requires repair is not covered by this warranty.

– Repairs or adjustments required due to failure to use fresh fuel or failure to properly prepare the unit for periods of non-use.

– **Use of gasoline blends exceeding 10% ethanol voids any and all warranties.**

– **Any tampering with the hour meter voids any and all warranties.**

– Products are designed to the specifications in the area that the product was originally distributed. Different areas may have significantly different legal and design requirements. This warranty is limited to the requirements in the area in which the unit was originally distributed. AriensCo does not warrant this product to the requirements of any other area. Warranty service is limited to service within the area originally distributed.

– In countries other than the United States and Canada, contact the AriensCo dealer for warranty policies that govern within your country. Rights may vary from country to country and within any one country.

Evaporative Emissions Control Warranty Exception

As required by the California Air Resources Board (CARB) and the US Environmental Protection Agency (EPA) the evaporative emissions control system is warranted to the ultimate purchaser, and any subsequent owner, for two years.

The CARB and EPA evaporative emissions control system warranty is described in a separate evaporative emission control warranty statement.

Special Exclusions for Job-site Vehicles

The following uses void the warranty terms on Atlas JSV (Warranty Code UG) vehicles:

– Renting or leasing the vehicle.

– Using the vehicle to tow or carry loads in excess of the limits specified in the operator's manual.

– Modifying the vehicle with parts and accessories that are not genuine or authorized Gravely parts or accessories.

– Modifying the vehicle without express written authorization from Gravely.

– Operating the vehicle when it has not been completely and properly assembled and pre-delivered by an authorized Gravely dealer.

Battery Warranty

Battery warranty is one year. Units used for rental or lease have no exceptions to the 90-day warranty. Total battery claim reimbursement will not exceed 45.00 USD.

Transmissions

The chart below details transmission warranty information. Transmission warranty terms may vary from the specific terms of this warranty. If inconsistent, the terms of the transmission warranty shall apply to the transmission and its component parts.

Transmission Manufacturer	Detail
Hydro-Gear Transaxle	See Hydro-Gear warranty. The warranty is administrated by AriensCo. Refer to www.gravely.com for warranty statement.
Parker Hannifin Drive & Valve Systems	Parker Transaxles, Pumps, Wheel Motors and Valves are warranted for the length of equipment warranty period. Refer to Warranty Code chart above. Warranty is administered by AriensCo.

Engines

The chart below details engine warranty information. Engine warranty terms may vary from the specific terms of this warranty. If inconsistent, the terms of the engine warranty shall apply to the engine and its component parts.

Engine Manufacturer	Detail	
Gravely V-Twin	Serial Number 0000400 and lower	4 Years or 500 Hours, whichever comes first. Refer to www.gravely.com for warranty statement.
	Serial Number 0000401 and higher	4 Years or 750 Hours, whichever comes first. Refer to www.gravely.com for warranty statement.
Yamaha	Yamaha-branded engines are warranted by the manufacturer and the warranty is administrated by AriensCo. Refer to www.gravely.com for warranty statement.	
Briggs & Stratton, Kawasaki, Kohler, Kubota	Covered by the engine manufacturer's warranty. Refer to the engine manufacturer's warranty statements.	

Parts and Accessories

Service replacement parts and non-serialized accessories are warranted for 90 days from date of purchase. Labor is not included.

Customer Responsibilities

Register the product immediately at the time of sale. If the dealer does not register the product, the customer must register the unit on-line at www.gravely.com.

To obtain warranty service, the **original purchaser** must:

– Ensure that the maintenance and adjustments explained in the Operator's Manual are routinely completed.

– Promptly notify AriensCo or an authorized Gravely service representative of the need for warranty service.

– Transport the product to and from the place of warranty service at owner's expense.

– Have the warranty service performed by an authorized Gravely service representative.

To find an authorized dealer use the dealer locator on our websites, or contact us by mail or phone.

Globally except Australia or New Zealand**:**	**Australia:**	**New Zealand:**
AriensCo 655 W. Ryan Street Brillion, WI 54110 Phone: (920) 756 – 4688 www.gravely.com	Roy Gripske & Sons Pty Ltd 11 Sodium Street Narangba Queensland 4504 Australia Phone: (61130) 036 3004 www.rgs.com.au	Masport Ltd 320 Ti Rakau Drive East Tamaki Auckland 2013 New Zealand Phone: 0800 627 7678 www.masport.co.nz

Disclaimer

AriensCo may from time to time change the design of its products. Nothing contained in this warranty shall be construed as obligating the AriensCo to incorporate such design changes into previously manufactured products, nor shall such changes be construed as an admission that previous designs were defective.

Limitation of Remedy and Damages

AriensCo liability under this warranty, and under any implied warranty that may exist, is limited to repair of any defect in workmanship, and repair or replacement of any defective part. AriensCo shall not be liable for incidental, special, or consequential damages (including lost profits). Some states do not allow the exclusion of incidental or consequential damages, so the above limitation or exclusion may not apply to you.

AriensCo shall not be held liable for damages, including premature wear and tear, or injuries caused by installation of unauthorized parts and accessories or for parts and accessories not installed by an authorized Gravely dealer.

Australian Consumer Law

The following applies solely to warranties subject to Subsection 102(1) of the Australian Consumer Law: Our goods come with guarantees that cannot be excluded by the Australian Consumer Law. You are entitled to a replacement or refund for a major failure and for compensation for any other reasonably foreseeable loss or damage. You are also entitled to have the goods repaired or replaced if the goods fail to be of acceptable quality and failure does not amount to a major failure.

Disclaimer of Further Warranty

AriensCo makes no warranty, express or implied, other than what is expressly made in this warranty. If the law of your state provides that an implied warranty of merchantability, or an implied warranty of fitness for particular purpose, or any other implied warranty, applies to AriensCo then any such implied warranty is limited to the duration of this warranty. Some states do not allow limitations on how long an implied warranty lasts, so the above limitation may not apply to you.

This warranty gives you specific legal rights, and you may also have other rights which vary from region to region.

655 West Ryan Street
Brillion, WI 54110

www.gravely.com

WARNING: Cancer and Reproductive Harm - www.P65Warnings.ca.gov

ARIENS | CO
EST. 1933