# User Manual

Model: H6250

Govee Christmas 2-in-1 String Lights

# IMPORTANT SAFETY INSTRUCTIONS

When using products, basic precautions should always be practiced including the following:

# READ AND FOLLOW ALL SAFETY INSTRUCTIONS.

- All safety messages will alert you to know what the potential hazard is, tell you how to reduce the chance of injury, and let you know what can happen if the instructions are not followed.
- Correct voltage: Make sure your local outlet voltage and circuit frequency correspond to the values indicated on the appliance's rating label.
- Never clean appliance parts with flammable fluids or harsh chemicals. The fumes can create a fire hazard or explosion.
- DO NOT ATTEMPT TO OPEN, MODIFY, OR REPAIR THIS PRODUCT. Any alteration or use of non-approved parts voids all warranties, negates compliance certifications, and may result in malfunction, electric shock, fire, or personal injury.
- Please do not operate the product with wet hands or pull on the power cord, as this may damage the power cord and cause a fire or electric shock.
- Regularly inspect the cable, power supply, and all other components. Do not use this product if any component is damaged.
- If the LED light source does not illuminate when the light is turned on, please disconnect the power supply, perform troubleshooting checks first, and if it still does

not illuminate, please consult after-sales service.

- When cleaning the light fixture, please turn off the power supply, use a soft cloth dipped in neutral detergent, wring it out, wipe the fixture, and then wipe it dry with a dry cloth.
- This appliance is not intended for use by persons (including children) with reduced physical, sensory or mental capabilities, or lack of experience and knowledge, unless they have been given supervision or instruction concerning use of the appliance by a person responsible for their safety.
  Children should be supervised to ensure that they do not play with the appliance.
- For ambiance lighting only. Not for illumination.
- This device uses a non-replaceable light source. When the light source reaches the end of its life cycle, this device should be replaced.
- The light source or separate control gear is not intended for use in other applications.
- Do not connect the lighting strings to the supply while it is in the packing or wound onto a reel.
- Do not use the lighting strings when covered or recessed into a surface.
- Do not open or cut the lighting strings.
- Move all cribs,beds furniture and toys away from the lights,Do not tie the bottom of the string lights and form loops as this could wrap around a child's neck and cause SUFFOCATION.
- External dimmers cannot be used with this product.
- Use this product with the provided power adapter only.
- To reduce the risk of strangulation,the flexible wiring connected to this luminaire shall be effectively fixed to the wall if the wiring is within arm's reach.
- Do not use seasonal products outdoors unless marked

suitable for indoor and outdoor use. When products are used in outdoor applications, connect the product to a Ground Fault Circuit Interrupting (GFCI) outlet. If one is not provided, contact a qualified electrician for proper installation.

- This seasonal use product is not intended for permanent installation or use.
- Do not mount or place near gas or electric heaters, fireplaces, candles or other similar sources of heat.
- Do not secure the wiring of the product with staples or nails, or place on sharp hooks or nails.
- Do not let lamps rest on the supply cord or on any wire.
- Unplug the product when leaving the house, or when retiring for the night, or if left unattended.
- This is an electric product – not a toy! To avoid risk of fire, burns, personal injury and electric shock it should not be played with or placed where small children can reach it.
- Do not use this product for other than its intended use.
- Do not hang ornaments or other objects from cord, wire, or light string.
- Do not close doors or windows on the product or extension cords as this may damage the wire insulation.
- Do not cover the product with cloth, paper or any material not part of the product when in use.
- To reduce the risk of fire and electric shock: Do not install on trees having needles, leaves or branch coverings of metal or materials which look like metal, and
- To reduce the risk of fire and electric shock: Do not mount or support strings in a manner that can cut or damage wire insulation.
- Do not place near standing areas of water, such as ponds and pools.
- To reduce the risk of fire or electric shock, do not attempt to replace lamps or modify string.

- Do not connect to another lighting string, decorative outfit, or seasonal product.
- To reduce the likelihood of excessive heat and possible damage, use only decorative lamp accessories packaged with this product.
- To reduce the risk of electric shock, use only with the power-supply cord provided or with a cord set intended for outdoor use.
- Do not use a cracked, frayed, or damaged cord. Inspect the cord periodically.
- Do not abuse cord – Do not carry product by the cord or yank or pull it to disconnect from the outlet.
- Disconnect the product from the outlet when not in use.
- Read and follow all instructions that are on the product or provided with the product.

# SAVE THESE INSTRUCTIONS

# Use and Care Instructions

- If the product is placed on a tree, the tree should be well secured and stable.
- Before using or reusing, inspect the product carefully. Discard any products that have cut, damaged, or frayed wire insulation or cords, cracks in the lampholders or enclosures, loose connections, or exposed copper wire.
- When storing the product, carefully remove the product from wherever it is placed, including trees, branches, or bushes, to avoid any undue strain or stress on the product conductors, connections, and wires.
- When not in use, store neatly in a cool, dry location protected from sunlight.
- Do not mount or support wires in a manner that can cut or damage wire insulation.
- When the product is placed on a live tree, the tree should be well maintained and fresh. Do not place on live trees in which the needles are brown or break off easily. Keep the tree holder filled with water.

# Introduction

Thank you for choosing Govee Christmas 2-in-1 String Lights! This set includes Christmas String Lights and Silver Ornament String Lights, designed to create a fuller, more layered holiday display for your Christmas tree. By day, the silver ornament add an elegant decorative touch. By night, illuminated snowflake patterns create a magical holiday ambiance with beautiful projections on nearby walls and floors.

# What Do You Get

| Item | Quantity |
|---|---|
| 99ft (30m) 300-LED Christmas String Lights | 1 |
| 26ft (8m) 20-Light Silver Ornament String Lights | 1 |
| Power Adapter | 1 |
| User Manual | 1 |
| Quick Start Guide | 1 |
| Service Card | 1 |

# At a Glance

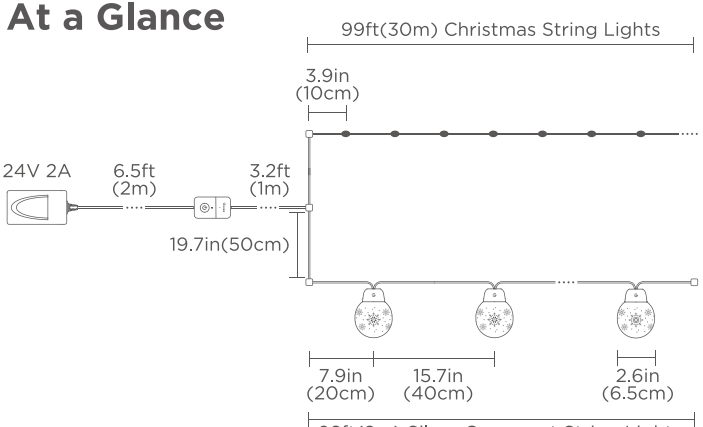


- Press to turn the light on or off.
- Long press for 5 seconds to reset.

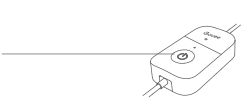
Control Box

# Installing Your Device

**Step 1: Choose the Best Location**

Place your Christmas tree close to a wall for the best snowflake projection effect.

**Step 2: Connect and Test the Lights**

1. Connect the control box to the power adapter.

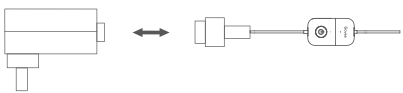

2. Connect the two light strings to the control box.

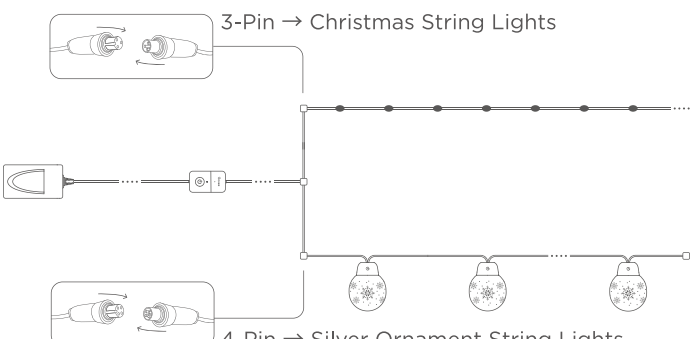


3. Plug in the power adapter and check whether both light strings turn on normally.

4. **Unplug the power adapter before installation.**
   ***For your safety, do not install the light strings while they are powered on.**

### Step 3: Install Christmas String Lights

Wrap the Christmas String Lights evenly from the bottom to the top.
*For a 7.5 ft Christmas tree, we recommend keeping approximately 4-6in (10-15cm) of vertical spacing between each loop for more even light coverage and a fuller overall effect.

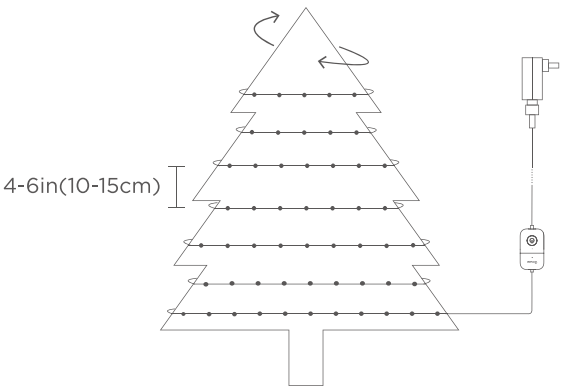


### Step 4: Install Silver Ornament String Lights

Wrap the Silver Ornament String Lights evenly from the bottom to the top.

For the best effect:

- Keep approximately 15-24in (40-60cm) of vertical spacing between each loop.
- Position the silver balls near the outer edges of the branches.
- Hide the wires inside the branches.

This helps create better visual depth and enhances the snowflake projection effect.

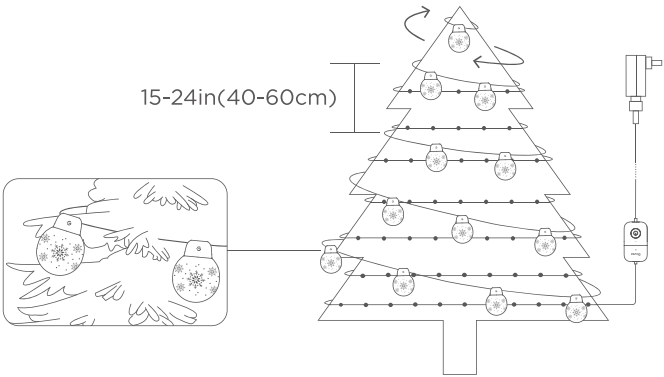


**Step 5: Complete the Installation**!

Plug in the power adapter and enjoy your holiday lighting effects!

**Step 6: Set Up Shape Mapping in Govee Home App**

Follow the instructions below to connect your device to Govee Home App, then complete Shape Mapping.
Shape Mapping identifies the 3D positions of both light strings on your Christmas tree, allowing them to work together for more accurate and immersive lighting effects.

# Pairing Your Device with Govee Home App

**What You Need**

- A Wi-Fi router supporting the 2.4GHz and 802.11b/g/n bands. 5GHz is not supported.

1. Download Govee Home App from the App Store (iOS devices) or Google Play (Android devices).




Download on the App Store

The Apple logo is a trademark of Apple Inc., registered in the U.S. and other countries and regions.
Apple Store is a service mark of Apple Inc., registered in the U.S. and other countries and regions.

GET IT ON Google Play

Google Play is a trademark of Google LLC.

2. Turn on the Bluetooth on your smartphone.
3. Open the app, tap "+" icon in the top right corner and search "H6250".
4. Tap the device icon and follow the on-screen instructions to complete pairing.

# Specifications

| | |
|---|---|
| Power Input (Power Adapter) | 100-240V~ 50/60Hz (US Plug) |
| Power Input | 24V⎓2A |
| Light Color | RGBWIC |
| Working Temperature | -20°C to 40°C / -4°F to 104°F |

# Matter Guide

**Cautions:**

1. You will need to complete the network connection of apps that support Matter (e.g. Google Home/Apple HomeKit etc.) within 15 minutes after the product is powered on when using Matter for the first time.
2. An IPv6 network is required.
3. Changing the network may cause Matter to malfunction.
4. If the product cannot connect to the app, press and hold the Power button of the control box for 5 seconds. After that, try connecting again.

**Step 1**

Find the Matter QR code or device number on the product or on the "Device Settings" page in Govee Home App.

**Step 2**

Turn on Bluetooth on your smartphone.

**Step 3**

Download and open an app that supports Matter such as Google Home /Apple Homekit, etc.

**Step 4**

Use the device number or QR code on the product in the app to complete the network connection for Matter for the product.

# Troubleshooting

**1. The lights do not turn on.**

a. Check that the power adapter, control box, and connectors are firmly connected.
b. Make sure the 3-pin connector is connected to the Christmas String Lights and the 4-pin connector is connected to the Silver Ornament String Lights.
c. Press and hold the Power button of the control box for 5 seconds to restore factory settings.

**2. The lighting looks uneven on the tree.**

a. The light strings may be wrapped unevenly. Adjust the spacing of both the Christmas String Lights and the Silver Ornament String Lights for more even light coverage.

**3. The snowflake projection is not obvious.**

a. Move the tree closer to a wall or place the silver balls facing nearby walls, floors, or ceilings.
b. The snowflake projection is more visible in a darker environment. Reduce ambient lighting for the best projection effect.

**4. The device cannot connect to the app.**

a. Ensure the device is powered on.
b. Turn on Bluetooth and Wi-Fi, move your phone closer to the control box, and try again.
c. If you're still experiencing a connection error, delete the connected device from the "My Device" page on the app. Then, reconnect to the app, following the instructions provided previously.
d. Press and hold the Power button of the control box for 5 seconds to restore factory settings.

**5. Fails to connect to Wi-Fi.**

a. Make sure the distance between the device and the router is less than 98.5ft.
b. Keep as few obstructions (e.g. walls, windows) as possible between the device and the router.

c. Make sure the Wi-Fi name and the password you entered are correct.
d. Make sure the Wi-Fi you connect to is 2.4GHz. 5GHz is not supported.

**6. Lost Wi-Fi connection.**

a. Make sure your home Wi-Fi works well.
b. Check whether the Wi-Fi password has been modified.
c. Keep as few obstructions (e.g. walls, windows) as possible between the device and the router.
d. Check whether the device has connected to Wi-Fi. If the device is not connected to Wi-Fi, please re-connect the device to Wi-Fi as mentioned above.

**7. Cannot pair or connect with Alexa or Google Assistant.**

a. Ensure the stability of the Wi-Fi connection.
b. Go to the app Settings page and follow the instructions under"User Guide"to pair the device again.

**8. The synchronization effect for Music Mode does not work properly.**

a. Ensure the control box is close to the music source, which will help the mic pick up sounds better.

**9. Can multiple users control one device?**

a. Each device can only be controlled by one account.
b. If multiple users want to control the same device, ensure they are using the same account.

# Customer Service

Warranty: 12-Month Limited Warranty

Support: Lifetime Technical Support

Email: support@govee.com

Official Website: www.govee.com

@GOVEE @goveeofficial @govee.official

@GoveeOfficial @GOVEE

# FCC Statement

USA
FCC Statement

This device complies with part 15 of the FCC Rules. Operation is subject to the following two conditions:
(1) This device may not cause harmful interference, and
(2) this device must accept any interference received, including interference that may cause undesired operation.

**Warning:** Changes or modifications not expressly approved by the party responsible for compliance could void the user's authority to operate the equipment.

**NOTE:** This equipment has been tested and found to comply with the limits for a Class B digital device, pursuant to Part 15 of the FCC Rules.

These limits are designed to provide reasonable protection against harmful interference in a residential installation. This equipment generates uses and can radiate radio frequency energy and, if not installed and used in accordance with the instructions, may cause harmful interference to radio communications. However, there is no guarantee that interference will not occur in a particular installation. If this equipment does cause harmful interference to radio or television reception, which can be determined by turning the equipment off and on, the user is encouraged to try to correct the interference by one or more of the following measures:

1. Reorient or relocate the receiving antenna.
2. Increase the separation between the equipment and receiver.
3. Connect the equipment into an outlet on a circuit different from that to which the receiver is connected.
4. Consult the dealer or an experienced radio/TV technician for help.

# FCC Radiation Exposure Statement

This equipment complies with FCC radiation exposure limits set forth for an uncontrolled environment.
This equipment should be installed and operated with minimum distance 20 cm between the radiator & your body.

Responsible party (this contact information is only for FCC matters) :
Name: GOVEE MOMENTS(US) TRADING LIMITED
Address: 2501 Chatham Rd Suite R Springfield IL 62704
Email: certification@govee.com
Contact information: https://community.govee.com/support

The Bluetooth® word mark and logos are registered trademarks owned by Bluetooth SIG, Inc. and any use of such marks by Guangdong Qianyan Technology Co., Ltd. is under license. Other trademarks and trade names are those of their respective owners.

The trademark Govee has been authorised to Guangdong Qianyan Technology Co., Ltd.
Copyright ©2021 Guangdong Qianyan Technology Co., Ltd.
All Rights Reserved.



Govee Home App

For FAQs and more information,
please visit: www.govee.com