Galanz

@2021 Galanz Americas Limited Company

Galanz

MODEL: GLTO2RDRM083

RETRO 2-SLICE TOASTER USER MANUAL



Thank you for purchasing a Galanz product. Please read this manual carefully for correct usage and safety, and keep for future reference. For service, support and warranty information, call 800-562-0738.

@2021 Galanz Americas Limited Company

CONTENTS

Important Safety Instructions 1

What's in the Box 3

Before First Use 4

Start Using Your Retro 2-Slice Toaster 5
How To Use
Tips & Tricks

Care & Maintenance 7
Cleaning

Product Warranty 8

READ ALL INSTRUCTIONS BEFORE USING YOUR GALANZ RETRO 2-SLICE TOASTER.

When using electrical appliances, basic safety precautions should always be followed, including the following:

- Before the first use, unpack the appliance carefully and check if there are any parts damaged or missing.
- This appliance is for household use only and it cannot be intended for use in moving vehicles.
- It is important to carefully remove all packing materials in the slots and under the lever. But do not remove the waming or model labels on the appliance.
- Ensure that the rated voltlage of your mains power supply corresponds to the voltage requirements of the appliance (AC 120 V, 60Hz).
- Do not leave the appliance unattended when connected to the power supply. Immediately unplug the appliance if there is any kind of malfunction or problem (i.e. overheating or smoke coming from the slots).
- Always disconnect the appliance from the power supply when the appliance is not in use and before cleaning or moving.
- It is recommended to keep the appliance in an appropriate distance of at least 20cm on each side from fumiture, walls, boards, curtains and other objects. Do not place the appliance near flammable liquids (alcohol) or beneath any heat-sensitive or moisture-sensitive materials or beneath boards or droplights.
- Do not immerse or place the toaster or power cord in any liquids or drip any liquids onto the toaster to avoid risk of electric shock and damage.
- Do not place the appliance or any part of it on or near hot surfaces such as a heater, gas burner, grill, oven, etc.
- Do not insert wrapped foods (i.e. kitchen foil) into the slots to avoid the risk of fire, electric shock and damage to the product.
- Do not use the toaster for toasting very dry cakes, pastries, cookies, or sandwiches.
- Do not insert any foreign objects into the slots, and always ensure that there are no foreign objects in the slots before use.
- Do not insert the crumb tray when it is still wet or damp. Ensure that the crumb tray is in place before operating the toaster. Otherwise crumbs may become charred on the bottom of the toaster and stick to the surface.
- Do not place any cloth or tissue beneath or on the appliance to avoid any risk of fire, electric shock and overheating.
- If the power cord warms up during operation or is likely to be damaged, it must be replaced by an authorized service center. Do not attempt to repair the power cord.
- Never insert your fingers in the slots when the toaster is connected to the power supply, and always keep your body, clothing and other heat-sensitive objects away from the slots during operation.
- Keep the product out of reach of children.

OPERATING INTRODUCTION

NOTES:

1. The lever will not stay in the toasting position unless the toaster is connected to the power supply.
2. It is normal for smoke to appear on the first heating. To prevent the smell and taste of your food from being affected, heat the appliance on toasting level 6 without any food in the slots. If the burnt smell occurs again during later use, clean the toaster. If the burnt smell persists even after thoroughly cleaning the appliance, return the appliance to an authorized service center for examination and repair.
3. The higher the setting you choose, the longer the heating time will be.
4. The maximum toasting setting when using the warmer to toast croissant is 3.
5. Only toast slices of bread, bagels, and pastries without any filing or glaze (i.e. jam , mayonnaise, or icing) and of suitable size (12cm x 12cm, 0.5 to 2.4 cm thick).
6. If the bread crumbles or bends in the slots, immediately cancel the toasting process by pressing the CANCEL button and unplug the toaster. Wait for the toaster to cool down, and then carefully remove the jammed bread slices.

SPECIFICATION

Model	GLTO2RDRM083
Power Consumption	120V, 60Hz
Watts	825 W
Product Weight	3.3 lbs / 1.3 kgs
Dimensions (DxWxH)	12.6 x 7.3 x 8.3 inches

HOUSEHOLD USE ONLY
SAVE THESE INSTRUCTIONS

WHAT'S IN THE BOX

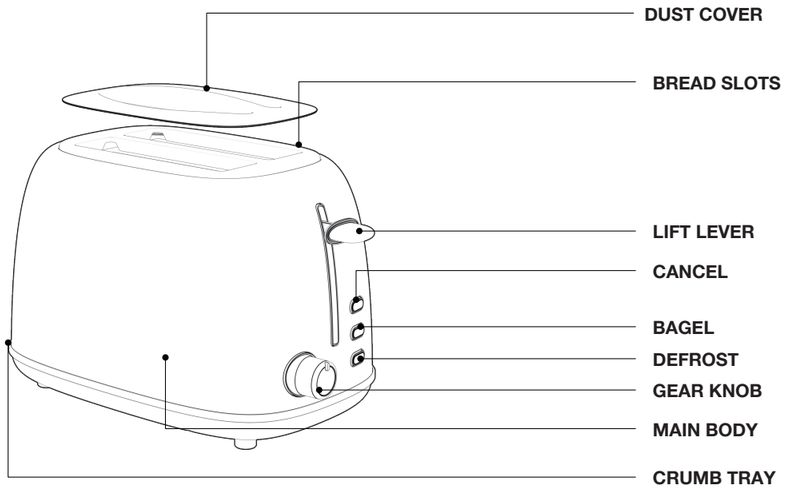

BEFORE FIRST USE

Before using your Retro 2-Slice Toaster for the first time.

1. It is important to carefully remove all packing and shipping materials (in the slots and under the on/off handle) as well as any price-tags, but do not remove any warning or model labels on the appliance. Ensure that there are no foreign objects (i.e. packing materials) in the slots before operating the appliance.

2. The toaster is operating with an electronic control. The on/off handle only engages in the toasting position if the toaster is connected to the power supply and switched on.

3. When using the toaster for the first time, you may notice a fine smoke haze because of the initial heating of some of the components. There is no need for concern. To prevent smell and taste of your food from being affected, you should heat the appliance on browning level 6 before placing any bread, bagels or pastries into the slots. If the burnt smell occurs again, clean the toaster. If the burnt smell persists after thoroughly cleaning the appliance, return the appliance to an authorized service center for examination and repair.

HOW TO USE

1. Use a sharp knife to cut the bread, bagels and pastries in slices of even thickness and appropriate size.

2. Insert a slice of bread into each slot of the toaster.

3. Rotate the gear knob to select the desired gear: 1 to 6.

4. Carefully pull down the lever until it stays at the bottom.

5. After the heating process is completed, the lever will be ejected automatically.

THE DEFROST FUNCTION

The DEFROST function extends the toasting time for toasting frozen bread.

1. Insert the frozen bread or bagel slices into the slots and select the desired browning setting.

2. Carefully press down the on/off handle until it engages in the browning position.

3. Press the DEFROST button. The DEFROST button will illuminate.

THE BAGEL FUNCTION

The BAGEL function shortens the toasting time for toasting bagels.

1. Insert the cut bagel into the slots.

2. Carefully press down the on/off handle until it engages in the browning position.

3. Press the BAGEL button. The BAGEL button will illuminate.

START USING YOUR 2-SLICE RETRO TOASTER

START USING YOUR TOASTER

TIPS & TRICKS

- The toasting process can be canceled at any time. Simply press the CANCEL button.
- The required browning level depends on your preference and the type and freshness of the bread, bagels, and pastries. For example: a short toasting time (low browning level) is sufficient for toasting white bread; but for toasting rye bread you must select a higher browning level to get a similar result.
- You can crisp up rolls by cutting the rolls in halves, using a sharp knife, and activating the Single-Side Toasting Function. Ensure, that the slices are max. 2.4 cm thick and will not stick in the toaster.
- Smaller bread slices may be easily removed by lifting the on/off handle to the HIGH LIFT position (approx. 2 cm above the idle position).
- Use a sharp bread knife for cutting to ensure you make an even and smooth cut. Remove crumbs and protruding crust.

WARNING:
Never insert your fingers in the slots while the toaster is connected to the power supply. Always switch off and unplug the appliance and wait for the appliance to cool before removing any jammed bread or crumbs.

- If bread sticks or jams in the slots, switch off (CANCEL button) and unplug the toaster and let the toaster cool down. Then, remove the bread slices carefully. Ensure not to touch the heating elements on the sides of the slots to avoid damage.
- The LED display of the appliance will stay lit up until the power cord is removed from the power outlet.
- It is recommended to empty the crumb tray after each use to avoid crumbs becoming charred and sticking on the crumb tray. Do not use the toaster without the crumb tray in place.
- If one of the function buttons (DEFROST, BAGEL) was pressed, the toaster switches back to the normal operation automatically after the function program has finished.

CLEANING

> **WARNING:**
> Always switch off the toaster (using the CANCEL button), unplug the power cord and allow the toaster to cool down, before removing the crumb tray or cleaning or moving the toaster. Do not immerse or place the toaster or power cord in any liquids or drip any liquids onto the toaster to avoid risk of electric shock and damage.

Do not place the appliance or any part of it in an automatic dishwasher.
Do not use abrasive cleaners, cleaning pads or any hard and sharp objects (i.e. metal scouring pads) for cleaning. Clean the toaster and power cord with a damped sponge or tissue and carefully dry the appliance after cleaning. Do not handle the appliance or any part of it with violence. Do not insert any foreign objects into the slots.

1. Switch off the toaster, pressing the CANCEL button, unplug the power connector and allow the toaster to cool down.
2. Pull out the crumb tray and empty the crumb tray. You may clean the crumb tray and rolls tray in warm dish-water. Thoroughly dry the trays after cleaning.
3. Grasp the toaster on both sides and hold the toaster over a sink or large bowl and turn it upside down. Carefully shake the crumbs out of the toaster while turning the toaster in all directions.
4. Wipe the exterior of the toaster with a damp soft cloth. Be careful not to spill water or any other liquids in the toaster. If necessary, clean the power cord in the same way. Then thoroughly dry the toaster and power cord with a dry soft cloth.
5. Insert the crumb tray back into the bottom of the toaster.

> **Caution:**
> Do not insert the crumb tray when it is still wet or damp.

STORAGE

Store the appliance on a clean, dry and secure surface away from children, direct sunlight or moisture.

Do not place any hard or heavy objects on the appliance or on any parts of it.

Always switch Off the appliance by pressing the cancel button and unpluging the power connector if the appliance is not in use.

If the appliance is not in use for a long period of time, clean the appliance before storage. If required, wind the power cord around the cord storage in the bottom of the appliance.

This warranty applies to products sold by Galanz Americas in the U.S. This warranty is in lieu of any other warranty and expressly applies to the individual product only.

Galanz product is warrantied for one year following purchase for defects in material and workmanship. **Please save your receipt as proof of purchase is required to make a warranty claim.** During this warranty period, we will provide the replacement cost of this product, replacement of an equivalent product, or repair per our discretion.

The warranty cannot be transferred through resale, including the resale through a 3rd party unauthorized retailer and is only bestowed upon the original consumer purchaser upon purchase from an authorized retailer.

■ **This warranty does not cover and excludes damages or defects caused by:**
— Consumer misuse
— Abuse
— Neglect including the failure to clean and/or provide adequate regular maintenance as outlined in the user manual
— Commercial use
— Subjecting the product to any voltage outside the specified range
— The affixing of any attachments not provided with the product
— Use in a manner not intended and outlined in the user manual
— Any subsequent damages caused by the above listed exclusions will not be covered and any claims determined to meet the above exclusions will be denied. All liability is limited to the purchase price and does not include any:
— Retail offered extended warranties
— Tax
— Other charges(including postage to send required materials)
— Incidental and/or consequential damages associated with the product in question

Every implied warranty, including any statutory warranty of merchantability or fitness for a particular purpose is disclaimed except to the extent prohibited by law, in which case such warranty is limited to the duration of this written warranty. This warranty gives you specific legal rights. You may have other legal rights that vary depending on where you live. Some states do not allow limitations on implied warranties or special, incidental, or consequential damaged, so the above limitations may not apply to you.

If you have a claim under this warranty, please call our Customer Service number: 1-800-562-0738.

For faster service, please have the model number, serial number, and receipt ready for the operator to assist you.

Please mail this warranty card to the address below within 30 days of purchase. Or you can register your product online by going to www.galanz.com\us.

Galanz Americas, 55 Challenger Road, Suite 503, Ridgefield Park, NJ 07660.

PLEASE PRINT CLEARLY.

Name_____

Address_____

City_____State_____Zip_____

Phone_____Email_____

Model Number_____Serial Number_____

Purchase Location_____

You must attach a copy of your purchase receipt to validate your registration.