60” EVOQUE INDUCTION RANGE

EVOQUE 400 SERIES

CODE ID

F4EIR608BR1-**



- Bridge Zone
- Power Boost Burner
- Pan Detection system
- Residual Heat Sensor
- Dual True Convection (each oven)
- Soft Closing Door
- Self Clean Oven
- 1 Telescopic Rack
- Cool Touch Door
- Digital Controls
- Meat Probe (main oven)
- Fast Pre-Heat



F4EIR608BR1-WH
GLOSSY WHITE RAL 9016



F4EIR608BR1-IV
GLOSSY IVORY RAL 1013



F4EIR608BR1-BK
GLOSSY BLACK RAL 9004

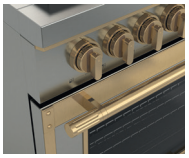

F4EIR608BR1-SS
STAINLESS STEEL



F4EIR608BR1-MW
MATTE WHITE RAL 9016



F4EIR608BR1-MI
MATTE IVORY RAL 1013



F4EIR608BR1-MB
MATTE BLACK RAL 9004



F4EIR608BR1-RAL
RAL CODE

DESCRIPTION

The Evoque 60” induction range derives its name from a purposeful intention: to evoke memories of an era when ranges were designed to capture the essence and legacy of Italian artistry. This collection was conceived to provide customers with a unique appliance that beautifully unites the spirit of the Italian Renaissance with the performance North American consumers demand from a professionalstyle range. Every Evoque range is meticulously handcrafted in the Veneto Region of Italy with only the highest quality materials are selected, ensuring that each range reflects both the timeless traditions of Italian design and the rigorous standards expected in today’s kitchens. Finished with a refined Brushed Brass metal finish, the Evoque range is offered in a selection of standard colors or can be custom ordered in an RAL color to suit your personal style.

OPTIONAL ACCESSORIES

F6BG60STD	Standard trim
FMTRP30	Telescopic rack

SPECIFICATIONS

COOKING SURFACE

Eight powerful premium European inductors
6 Single Induction cooking zones
2 Max Power with Ø 11” cooking zone
2 Bridge Zone Elements (griddle function)
Elegant Ceramic glass surface
Booster function for each cooking zone
Residual heat and Power-on Indicators
Pot Detection System
Child Lock Function
Automatic Heat-up

OVEN

Dual true convection
Self-cleaning (right oven)
Black porcelain enamel interior
Cool-touch, soft-closing doors
3 Halogen lights
2 Chrome racks
1 Telescopic rack
Meat probe (main oven)
Total capacity 4.34 cu. ft. (each oven)

OVEN FUNCTIONS

Bake
Broil
Roast
True Convection
Warm / Proof / Dehydrate
Meat Probe (right oven)
Self-Clean (right oven)
Sabbath Mode (right oven)
Convection Roast

EVOQUE 400 SERIES

60” INDUCTION RANGE



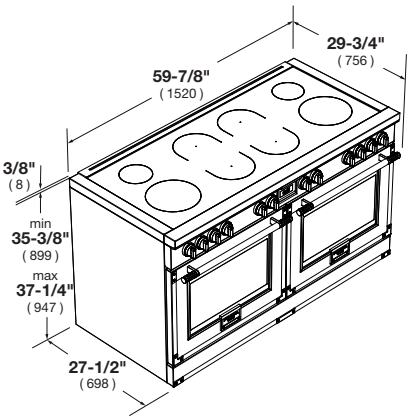

MODEL CODE		F4EIR608BR1-★★		
Series		60” Evoque - Induction		
COOKTOP				
Type		Induction		
Cooking Surface		Ceramic Glass		
Knobs		•		
Induction Special Features				
		Pot Detection System		Child lock function
		Cooling fan system		Failure Codes Indication
INDUCTION CONTROL FEATURES				
		Knob for power setting (illuminated)		Power levels 1 to 9
		Digital display for power level indication		Booster/Fast boil function for each zone
		Heat up time automatic		Minute minder
		Residual heat indication		
COOKING ZONES		6		
Front Left	Power L9	Inductor 10"	(250mm)	2300W | 3000W
Rear Left	Power L9	Inductor 6,5"	(160mm)	1400W | 2100W
Front Middle Left	Power L9	Inductor Octa	(210x190mm)	2100W | 3000W
Rear Middle Left	Power L9	Inductor Octa	(210x190mm)	2100W | 3000W
Front Middle Right	Power L9	Inductor Octa	(210x190mm)	2100W | 3000W
Rear Middle Right	Power L9	Inductor Octa	(210x190mm)	2100W | 3000W
Front Right	Power L9	Inductor 10”	(250mm)	2300W | 3000W
Rear Right	Power L9	Inductor 6,5”	(160mm)	1400W | 2100W
OVEN		LEFT		RIGHT
Type		30” ELECTRONIC		30” ELECTRONIC SELF-CLEANING
Oven Type		Multifunction 2 Fans (True Euro Conv.)		Multifunction 2 Fans (True Euro Conv.)
Temperature Regulation		Electronic thermostat		Electronic
Functions				
True European Convection Bake (Multi-Level)		•		•
Convection Broil		•		•
Convection Roast		•		•
Bake		•		•
Broil		•		•
Pizza (Lower Convection)		•		-
Thaw (Defrost)		-		•
Control Panel				
Control type		Electronic thermostat		OKIDA OC3100 - Electronic
Clock,Temperature,Function Display / Commands		No display / 2 Knobs		White LED / 2 Knobs
		-		Hours clock format AM / PM
		-		Preheat bar (25%,50%,75%,100%)
		-		Sabbath mode
		-		°F-°C degree unit
Oven Door(s)				
Oven Glass Window		Deep Embossed Window		Deep Embossed Window
Door Cooling System / Soft Closing System		4 Pane Heat Resistant Glass / •		4 Pane Heat Resistant Glass / •
Handle Style (30mm Ø)		Removable metal end cap		Removable metal end cap
Oven Cavity				
Net Capacity cu.ft.		4,4		4,4
Internal Width / Internal Depth		24” (610 mm) / 15 3/4” (400 mm)		24” (610 mm) / 15 3/4” (400 mm)
Rack Positions / Oven Lights		6 / 3x20W Halogen		6 / 3x20W Halogen
Heating Element				
Broil Upper Heating Element		3100 W	(240V)	3100 W (240V)
Upper Auxiliary Element Wattage		1032 W	(240V)	1032 W (240V)
Concealed Bake Lower Heating Element		1400 + 600 W	(240V)	1400 + 600 W (240V)
Convection Element		2x1300 W	(240V)	2x1300 W (240V)
Oven Accessories				
Chromed racks		•		•
Enameled Grill set (basin + anti-splash)		•		•
Telescopic chromed rack		•		•
Meat probe		1		1
DIMENSIONS | WEIGHTS (IN OR LBS)				
Overall dim - Width | Height | Depth (Included Handle)		59 7/8" (1520mm) | 35 3/8" to 37 1/4" (898 - 947mm) | 29 3/4" (756mm)		
Gross weight | Net weight		267 kg - 588,6 lb | 246 kg - 542,3 lb		
POWER / RATINGS (208/240 V, 60 HZ)				
KW/Amps rating at 120-240V, 60Hz		20,3 kW - 84,6 A		
KW/Amps rating at 120-208V, 60Hz		17,6 kW - 84,6 A		
Cable + Plug | Cable length		Nema 14-50P | 59 1/16" (1500mm)		
INSTRUCTIONS FOR USE				
Use & Care Manual - Installation Manual		EN, SP, FR		