FRIGIDAIRE



Electric Range

Available Products: FCREH050BS

Available Colors: Stainless Steel

Version: 09/26

Product Specifications

Cooking Controls

Bake	Yes
Broil	Yes
Kitchen Timer	Yes
Off	Yes
Oven Light	Yes
Preheat	Yes
Up / Down Arrow	Yes

Oven

Bake Element	2600 Watts
Bake Element Pass	4
Bake Element Type	Raised
Broil Element	3000 Watts
Broil Element Pass	4
Number of Rack Positions	6
Oven Interior Color	Midnight Black
Oven Light Quantity	1
Oven Light Type	Halogen
Oven Light Watts	40 Watts
Rack Position Type	Embossed
Rack Type 1	Flat
Rack Type 1 Quantity	2

Cooktop Performance

Right Front Element Burner Size	9"
Right Rear Element Burner Size	6"
Left Front Element Burner Size (Small)	6"
Left Front Element Burner Size (Large)	9"
Left Rear Element Burner Size	6"
Right Front Element Burner	3000 Watts
Right Rear Element Burner	1200 Watts
Left Front Element Burner (Small)	1400 Watts
Left Front Element Burner (Large)	3000 Watts
Left Rear Element Burner	1200 Watts

Electrical Specifications

Connected Load @ 208V	9 kW
Connected Load @ 240V	12 kW
Minimum Circuit Required	40 Amps
Voltage Rating	240 V

Cooking Controls Function

Program Fahrenheit or Celsius	Yes

Cooktop

Cooking Surface Type	Smooth
Element On Indicator Light	Yes
Hot-Surface Indicator Light	Yes

Dimensions and Volume

Minimum Height	46 3/4"
Maximum Height	47 3/4"
Width	30"
Depth	26"
Depth With Door 90° Open	47 5/16"
Depth With Handle	28 1/2"
Oven Interior Height	18 1/8"
Oven Interior Width	25 3/16"
Oven Interior Depth	19 7/8"
Oven Capacity	5.3 Cu. Ft.

Installation

Adjustable Leveling Legs	Yes

Safety Certifications and Approvals

UL Listed	Yes

For planning purposes only. We reserve the right to change specifications or discontinue models without notice.
Refer to Product Installation Guide for detailed installation instructions on the web at frigidaire.com / frigidaire.ca
Electrolux Major Appliances, N.A.
USA • 10200 David Taylor Drive •Charlotte, NC 28262 • Charlotte, NC 28262 • 1-877-4electrolux (1-877-435-3287) • frigidaire.com
CANADA • 5855 Terry Fox Way • Mississauga, ON L5V 3E4 • 1-800-265-8352 • frigidaire.ca

Available Products: FCREH050BS	Available Colors: Stainless Steel
Version: 09/26	

General Specifications

Prop 65 Label	Yes
Warranty - Labor	1 Year
Warranty - Parts	1 Year

For planning purposes only. We reserve the right to change specifications or discontinue models without notice.
Refer to Product Installation Guide for detailed installation instructions on the web at frigidaire.com / frigidaire.ca
Electrolux Major Appliances, N.A.
USA • 10200 David Taylor Drive •Charlotte, NC 28262 • Charlotte, NC 28262 • 1-877-4electrolux (1-877-435-3287) • frigidaire.com
CANADA • 5855 Terry Fox Way • Mississauga, ON L5V 3E4 • 1-800-265-8352 • frigidaire.ca

5486

Available Products: FCREH050BS	Available Colors: Stainless Steel
Version: 09/26	

Installation Diagram

Installation Drawing

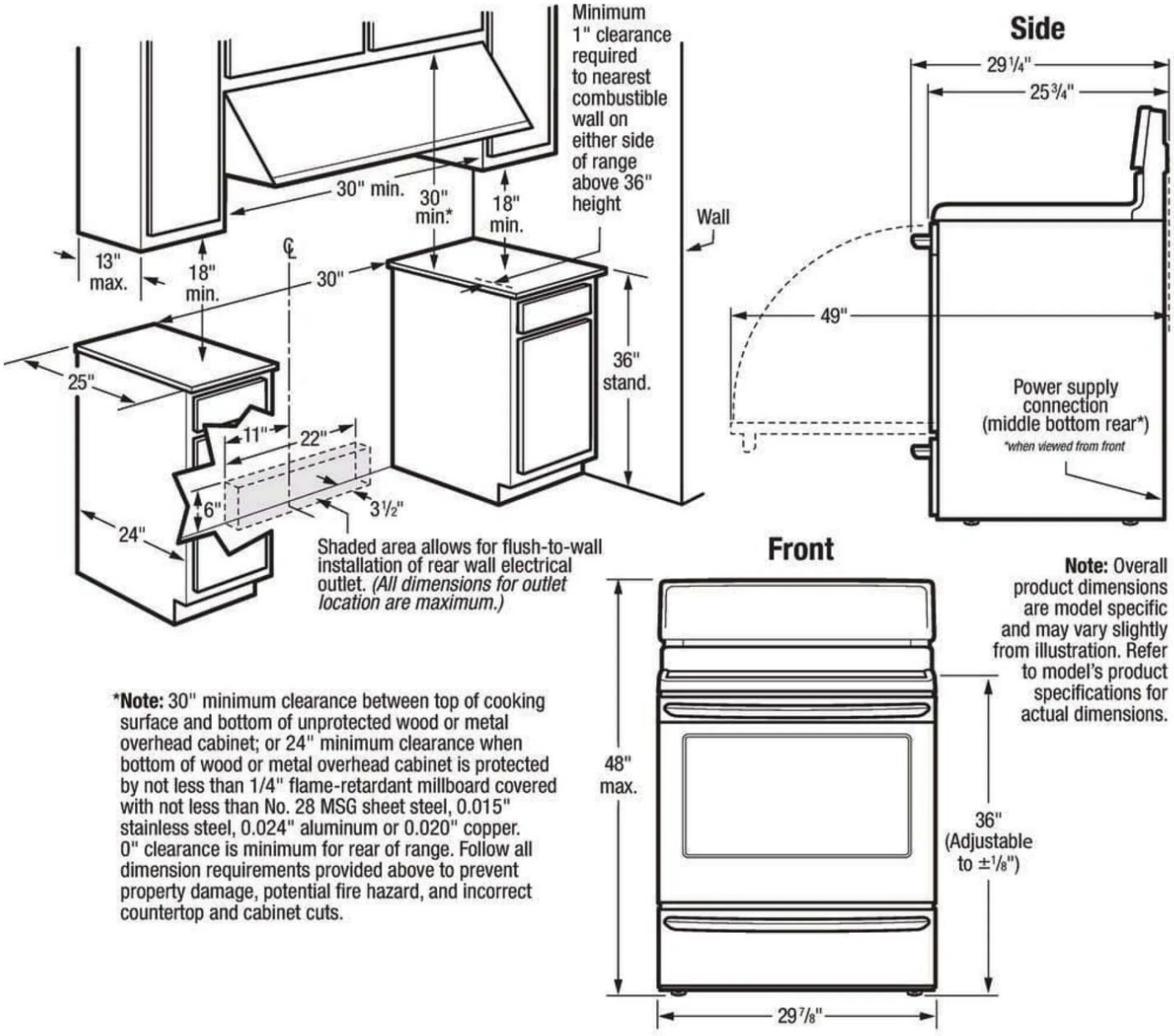

***Note:** 30" minimum clearance between top of cooking surface and bottom of unprotected wood or metal overhead cabinet; or 24" minimum clearance when bottom of wood or metal overhead cabinet is protected by not less than 1/4" flame-retardant millboard covered with not less than No. 28 MSG sheet steel, 0.015" stainless steel, 0.024" aluminum or 0.020" copper. 0" clearance is minimum for rear of range. Follow all dimension requirements provided above to prevent property damage, potential fire hazard, and incorrect countertop and cabinet cuts.

Note: Overall product dimensions are model specific and may vary slightly from illustration. Refer to model's product specifications for actual dimensions.

For planning purposes only. We reserve the right to change specifications or discontinue models without notice.
Refer to Product Installation Guide for detailed installation instructions on the web at frigidaire.com / frigidaire.ca
Electrolux Major Appliances, N.A.
USA • 10200 David Taylor Drive •Charlotte, NC 28262 • Charlotte, NC 28262 • 1-877-4electrolux (1-877-435-3287) • frigidaire.com
CANADA • 5855 Terry Fox Way • Mississauga, ON L5V 3E4 • 1-800-265-8352 • frigidaire.ca