FORCE USA

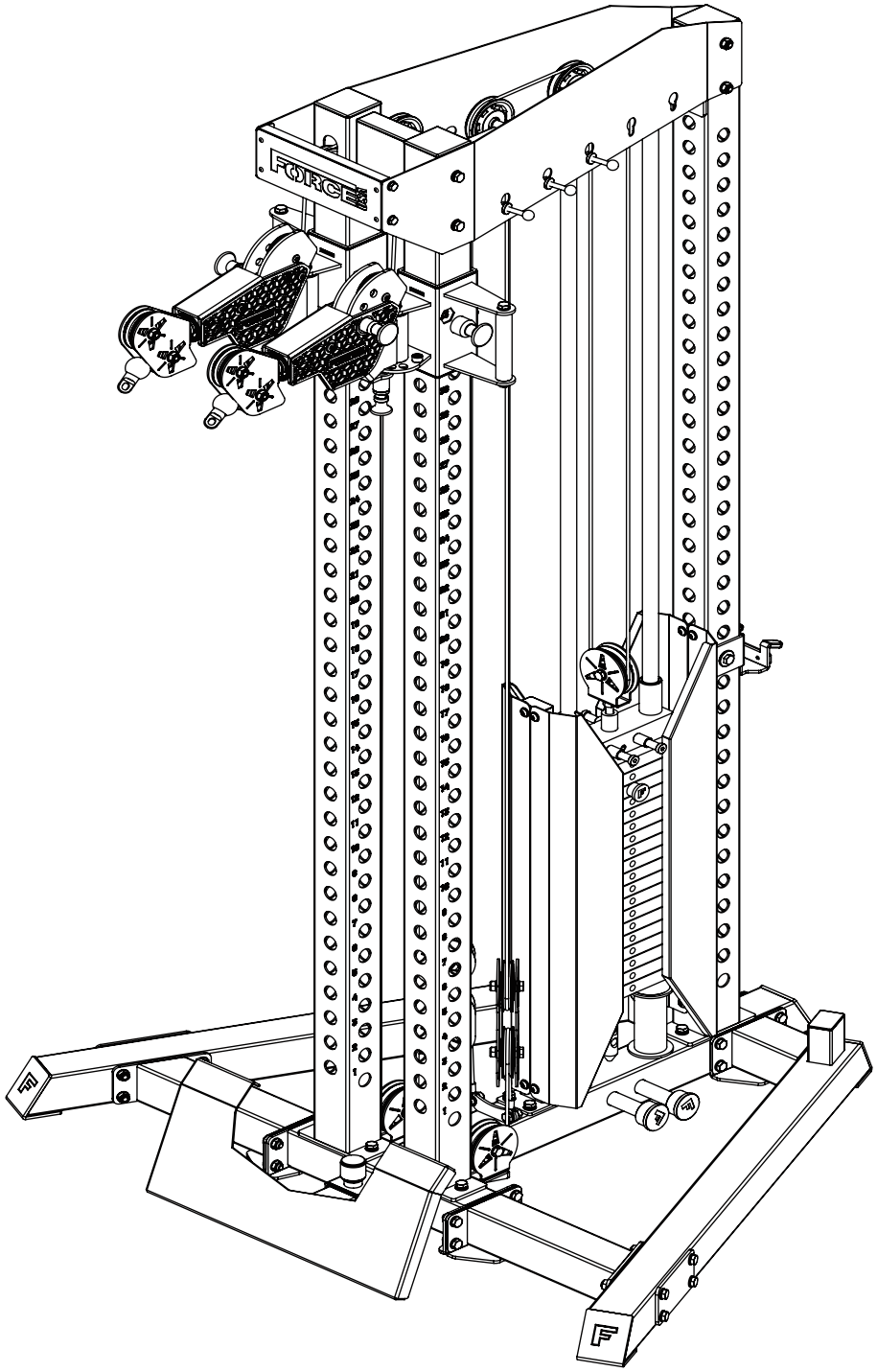

USER MANUAL | **F-TT**

THANK YOU FOR YOUR PURCHASE

For the most up to date info about using your equipment and our latest support videos, please visit:

www.forceusa.com

FORCE USA

TRAINING APP

Download now and get access to 400+ exercise tutorials, absolutely free!

DOWNLOAD THE APP

Download on the App Store

GET IT ON Google Play

STAY FOCUSED

Enjoy a low-friction interface designed to keep you focused on your next set.

NEW WORKOUT PLANS

Loaded with a growing library of unique workouts. Hundreds of movement tutorials designed by our expert panel of coaches.

REWARD YOUR SUCCESS

See your results build after every session with the pyramid progess tracker. Feel the support and share your progress with family and friends.

HARDER IS GOOD SMARTER IS BETTER

The Force USA Training App offers customized workout plans so that you can get the same results in half the time.

Learn more at app.forceusa.com

TIPPING SAFETY

F-TT Tandem Tower



REAR WARNING LABEL LOCATION

Placement reference supplied with the bolting warning.

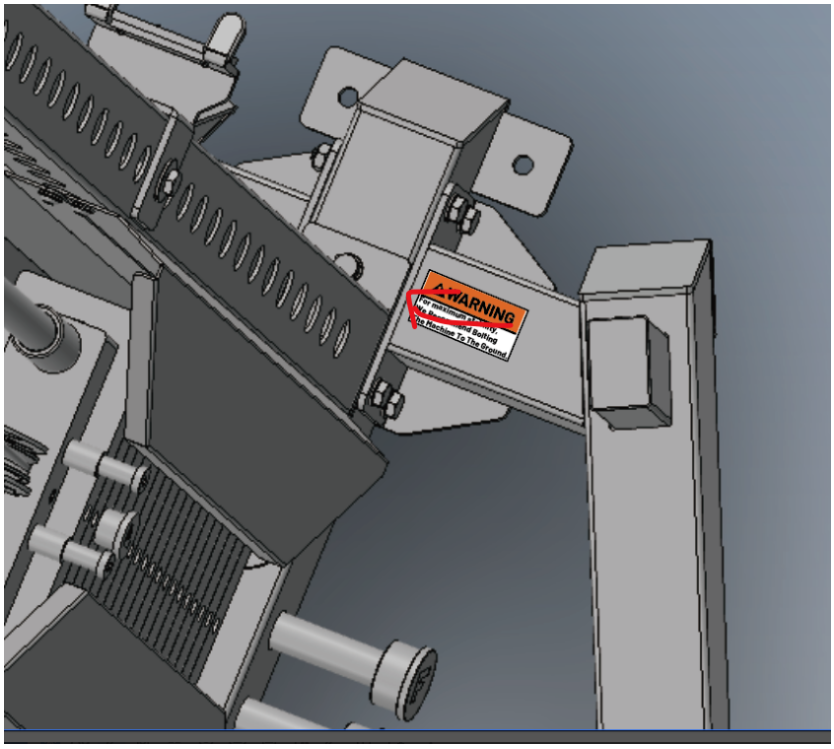

For maximum stability, we recommend bolting the machine to the ground.

BEFORE YOU START



Read all instructions in this manual before assembling or using this equipment



Only tighten nuts and bolts loosely until all equipment is assembled. Once the equipment is fully assembled, tighten from the bottom up, working evenly around the unit.

Remove all parts from the packaging and count each component separately to ensure everything is provided correctly, noting that some items may be pre-assembled

Follow the instructions and refer to both the individual assembly pages and the exploded views of the equipment whenever possible

The owner is responsible for ensuring that all users of this unit have read the user manual and understand the safety precautions

Descriptions of left and right refer to the perspective of standing in front, facing the equipment.

Place all parts in a cleared area and remove the packing materials. Do not dispose of the packing materials until all assembly steps are completed

It is recommended to keep these instructions

Although current at the time of this printing, specifications for this model may have changed in our continuing effort for improvement. Force USA reserves the right to modify and improve the specifications of its products without prior notice.

BEFORE YOU START CONTINUED

SAFETY PRECAUTIONS

Every piece of Force USA equipment is built for maximum safety and meets or exceeds all applicable domestic and international standards. However, certain precautions must be taken when operating any piece of fitness equipment.

- It is highly recommended that two or more people are used for assembly
- Assemble equipment on a flat surface
- Consider placing a mat/mats under the equipment to protect your floor
- Ensure all parts are in working order prior to use
- Make sure all pivoting components are able to move freely
- Do not use or store the equipment outdoors or around water
- Do not over tighten any component with pivoting function
- Keep hair, fingers and clothing away from moving parts
- Only use attachments recommended by the manufacturer
- Never operate if parts are not functioning correctly
- Always stretch prior to using equipment
- Stop immediately if you experience any pain, dizziness or nausea
- Before starting any exercise program consult your doctor

PREVENTATIVE MA INTENANCE

To ensure your equipment is operating at its peak, please follow the below preventative maintenance schedule performing all tasks upon initial assembly:

Daily Maintenance

- Wipe down the equipment to remove any dust and sweat residue with a dry, non-abrasive cloth
- Inspect the unit for noisy, damaged or loose components

Monthly Maintenance

- Thoroughly clean the equipment using a non abrasive cloth dampened with a mild, all purpose cleaner ensuring to thoroughly wipe down and dry the equipment afterwards
- Apply a 100% silicone lubrication (preferably spray) to guide rods, pulley sliders, weight plate carriages and any other moving parts where friction can occur including bearings (where applicable). Any other form of lubrication will void your warranty
- Check the tightness of all bolts, nuts and screws
- Check the cables for fraying or any signs of wear and ensure they are at the correct tension with a small amount of slack at resting position (where applicable)
- Inspect pulleys for any damage or cracks (where applicable)
- Knurling can be cleaned using a soft bristled brush to help remove any particles that may be nestled within the knurling
- Vacuum around the machine/equipment to prevent dust acclumulation

PARTS & HARDWARE

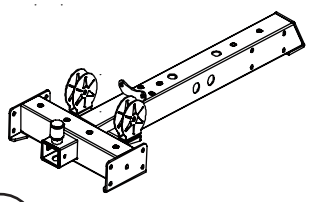

1 **x 1** **3129 Rear Bottom Beam Pipe Assembly**

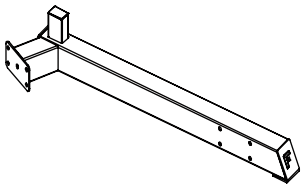

2 **x1** **3129 Bottom Beam Right Side Pipe Assembly**

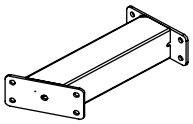

3 **x2** **3129 Front Bottom Beam Side Pipe Weldment**

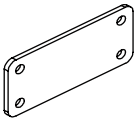

4 **x2** **75×160×5 Connecting Plate**

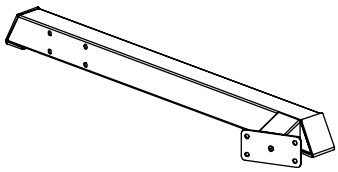

5 **x1** **3129 Bottom Beam Left Side Pipe Weldment**

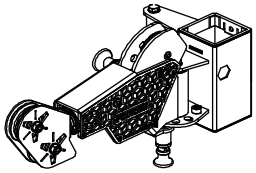

13 **x1** **3141 Bird Slide Sleeve - Right**

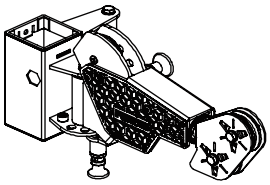

14 **x1** **3141 Bird Slide Sleeve - Left**

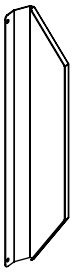

15 **x4** **3129 Guard**

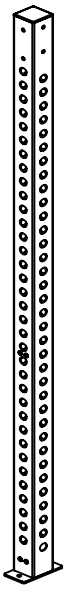

10 **x1** **3129 Rear Column Assembly**

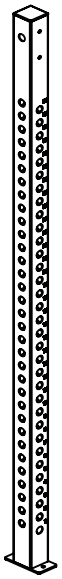

11 **x2** **3129 Front Column Assembly**

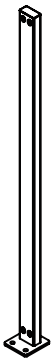

18 **x1** **3129 Guard Fixing Pipe Assembly**

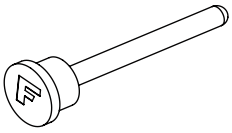

19 **x1** **ϕ 10×100 Magnetic Pull Pin - Black Head, Rope - free, F Mark**

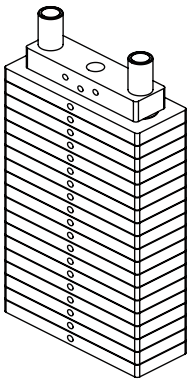

20 **x 1** 90KG **Counterweight Assembly** (**Top Belt with Wire**)

PARTS & HARDWARE

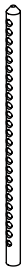

21 **x1** **24 + 1 Lifting Rod**



22 **x2** **2025 Long Guide Rod Pipe Assembly**

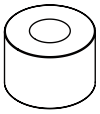

23 **x2** **60 - 27 Shock Absorption Pad**

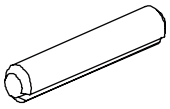

24 **x1** **10×60 Straight Elastic Cylindrical Pin**

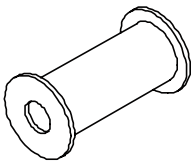

25 **x2** **3141 Counterweight Support Weldment**

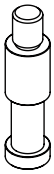

26 **x4** **3129 Rubber Band Hanging Shaft**

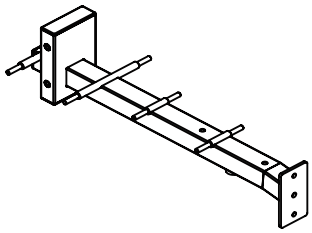

27 **x1** **3129 Top Beam Pipe Assembly**

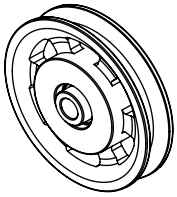

28 **x10** **90 Aluminum Alloy Pulley**



31 **x2** **Movable Pulley Frame Assembly (USA)**

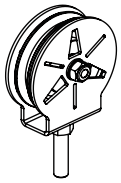

32 **x1** **3141 Counterweight Block Pulley Frame Assembly**

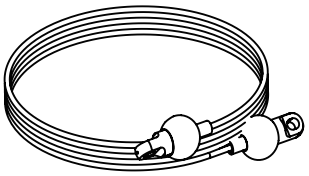

34 **x1** **3129 Ball - Ball Steel Wire Rope Assembly**

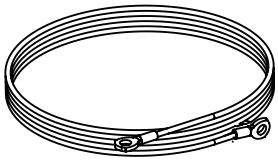

35 **x2** **3129 Nose Steel Wire Rope**

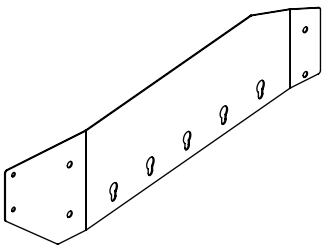

36 **x1** **3129 Upper Fixing Right Plate**

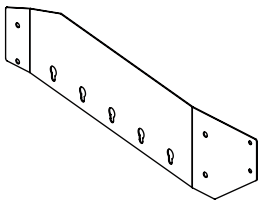

37 **x1** **3129 Upper Fixing Left Plate**

PARTS & HARDWARE

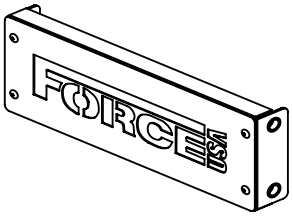

38 **x1** **3129 Decorative Fixing Plate Assembly**

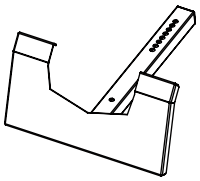

40 **x1** **3129 Foot Pedal Assembly**

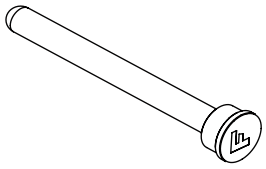

41 **x2** **25 Ball Magnetic Pull Pin**

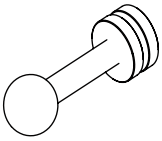

42 **x6** **50 Long Quick Pull Pin Assembly**

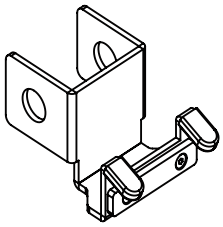

43 **x1** **3129 Foot Pedal Hook Assembly**

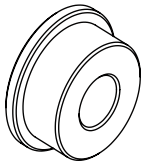

44 **x2** **Screw Bushing**



46 **x2** **FORCEUSA Aluminum Alloy Handle Strap**

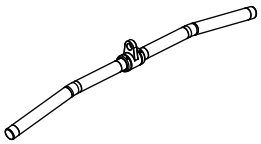

47 **x1** **FORCEUSA Large Pull Handle Assembly**

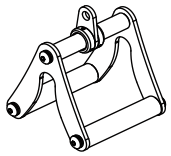

48 **x1** **3141 Puller**



49 **x2** **Black Chain**



50 **x4** **Black Hoist**

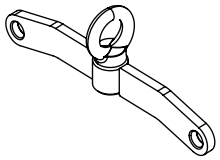

51 **x1** **3129 Double Pull Tab Assembly**

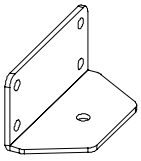

52 **x4** **3129 Foot Fixing Plate**

HARDWARE IDENTIFIER

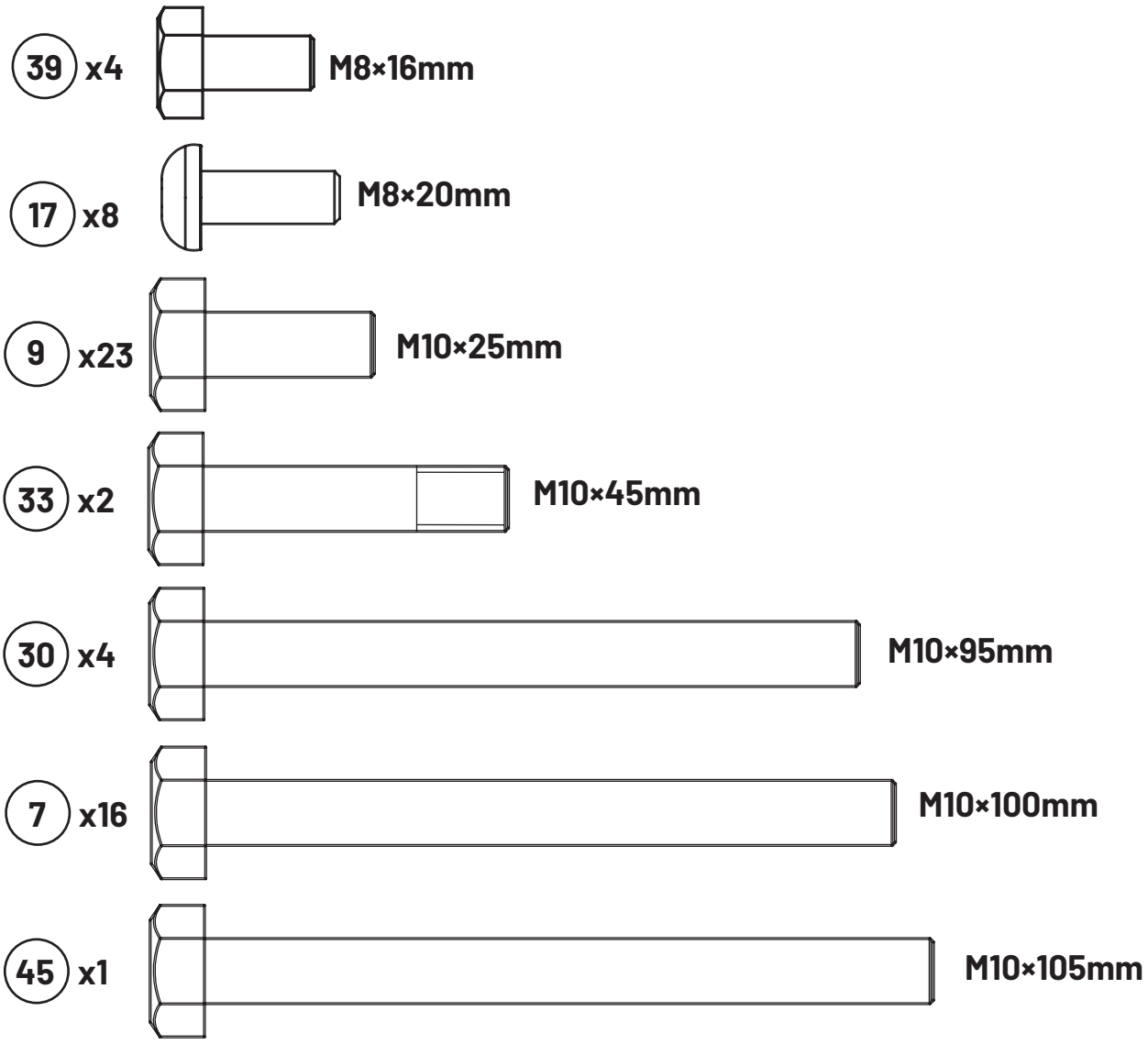

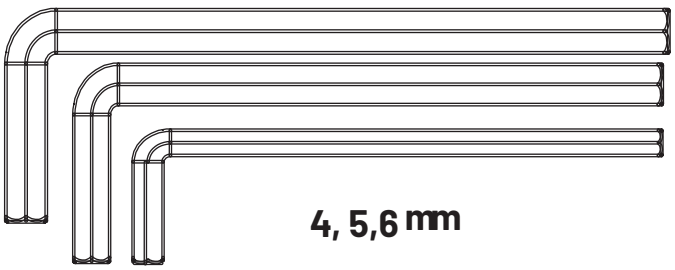

Note: parts may not be to scale

HARDWARE IDENTIFIER

8 x39  **M10 Lock Nut**

6 x81 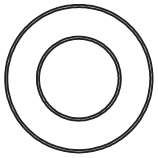 **10 Flat Washer**

12 x13 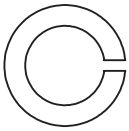 **10 Spring Washer**

29 x2 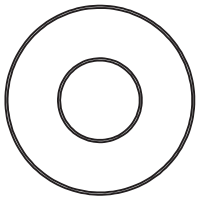 **Large Flat Washer**

16 x12 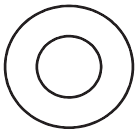 **8 Flat Washer**

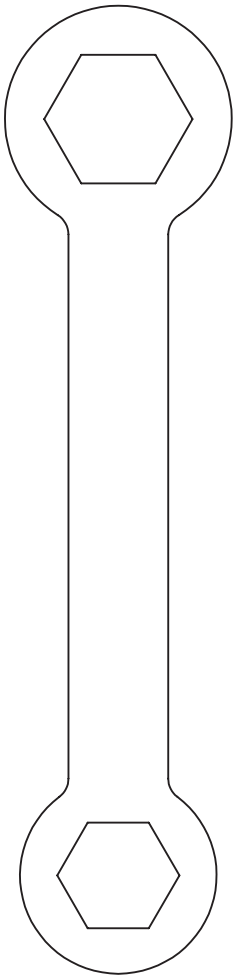

14, 17 wrench

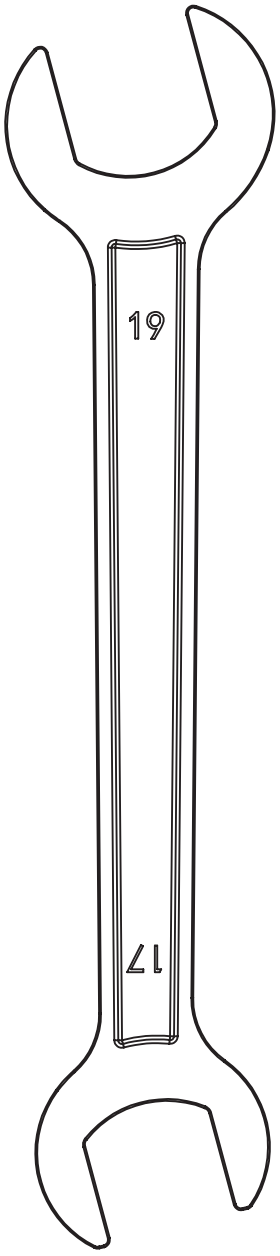

17, 19 wrench



Note: parts may not be to scale

STEP 1 - PARTS & HARDWARE

1 x1 3129 Rear Bottom Beam Pipe Assembly

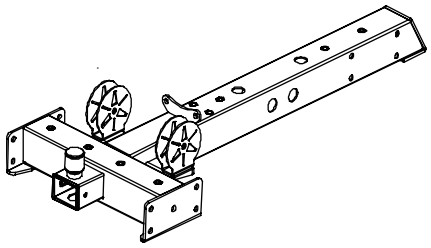

2 x1 3129 Bottom Beam Right Side Pipe Assembly

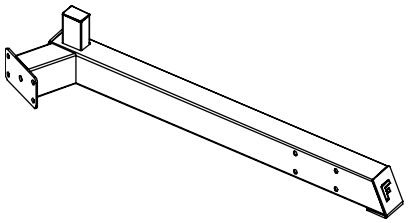

3 x2 3129 Front Bottom Beam Side Pipe Weldment

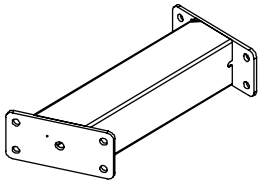

4 x2 75×160×5 Connecting Plate

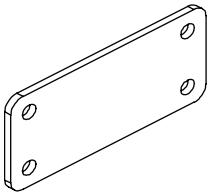

5 x1 3129 Bottom Beam Left Side Pipe Weldment

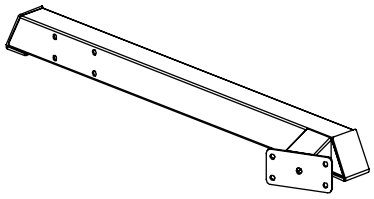

6 x40 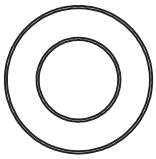 10 Flat Washer

8 x20  M10 Lock Nut

9 x8 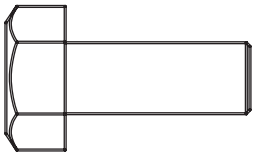 M10×25mm

7 x12  M10×100mm

STEP 1 - ASSEMBLY

Throughout this manual RIGHT and LEFT is defined as if you are standing in front of and facing the equipment.

The installation methods on the left and right sides are the same.

Fully tighten this step's hardware

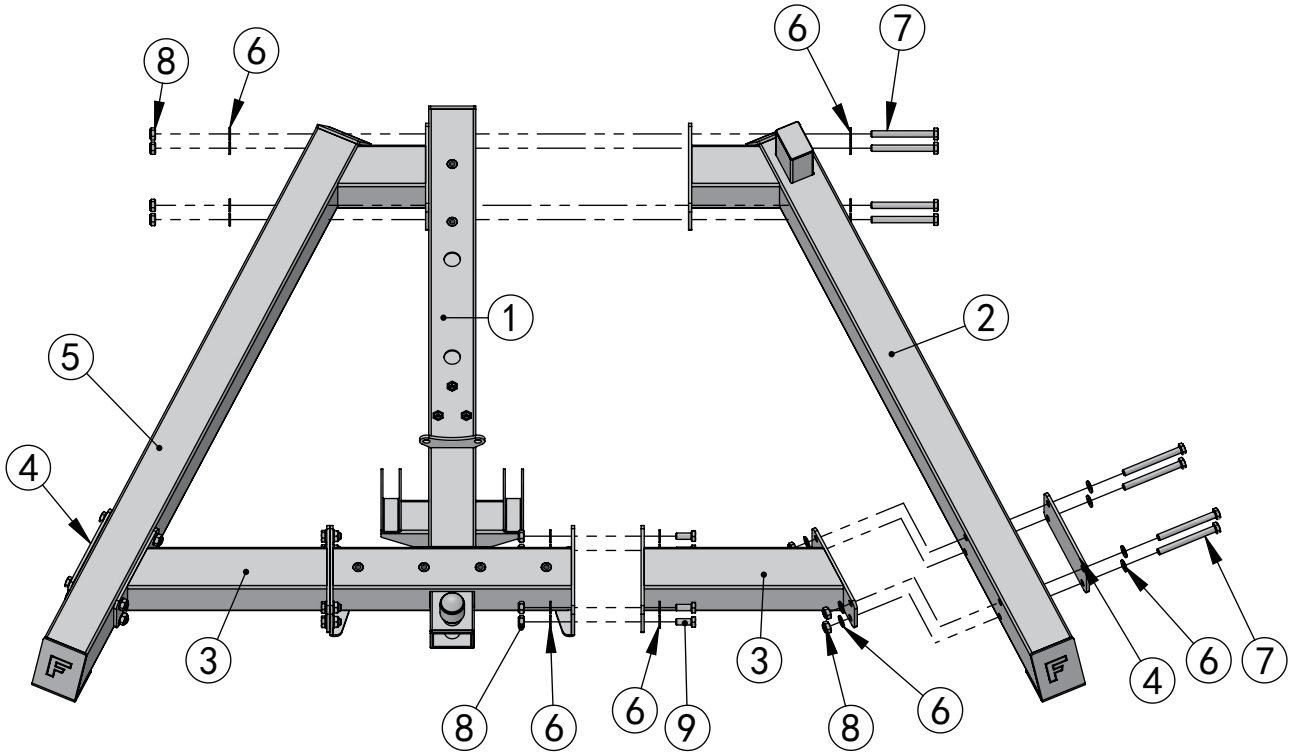

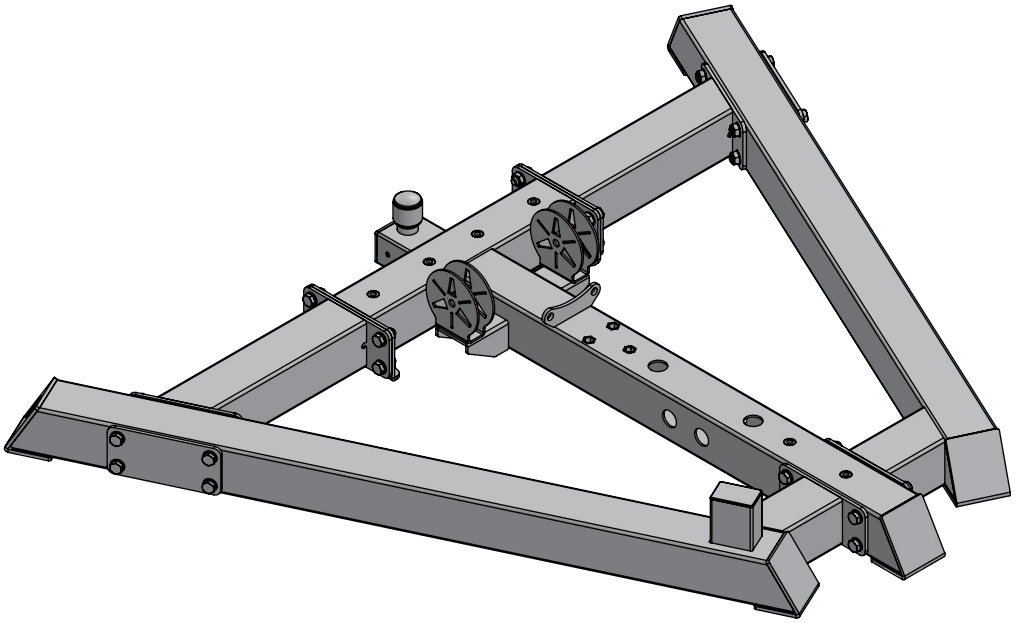

STEP2 - PARTS & HARDWARE

13 **x1** **3141 Bird Slide Sleeve - Right**

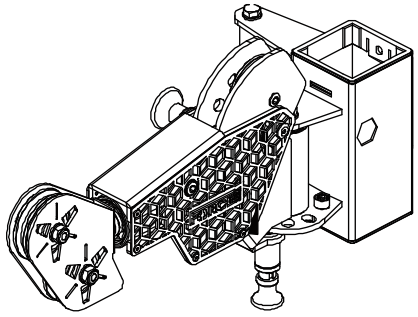

14 **x1** **3141 Bird Slide Sleeve - Left**

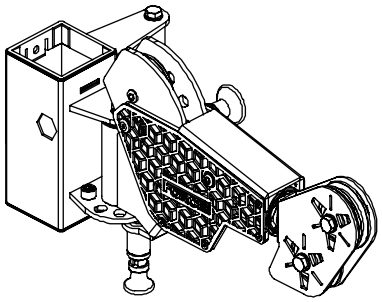

10 **x1** **3129 Rear Column Assembly**

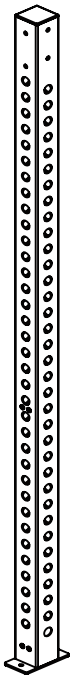

11 **x2** **3129 Front Column Assembly**

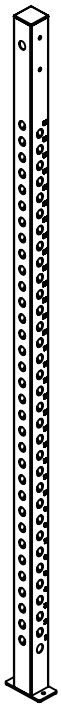

9 **x6**

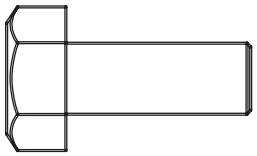

M10×25mm

6 **x6**

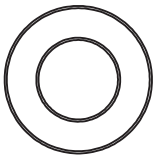

10 Flat Washer

12 **x6**



10 Spring Washer

STEP 2 -ASSEMBLY

Throughout this manual RIGHT and LEFT is defined as if you are standing in front of and facing the equipment.

Fully tighten this step's hardware

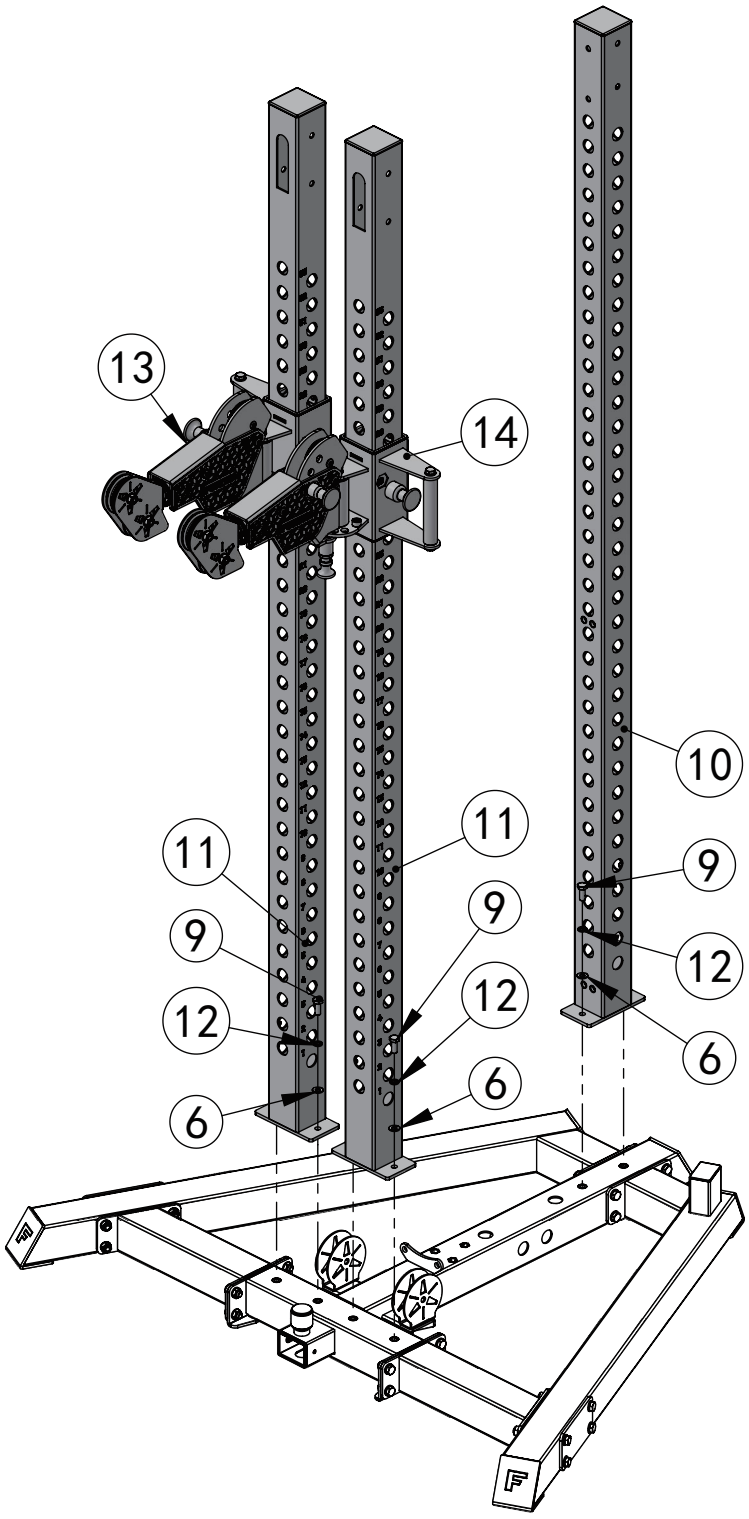

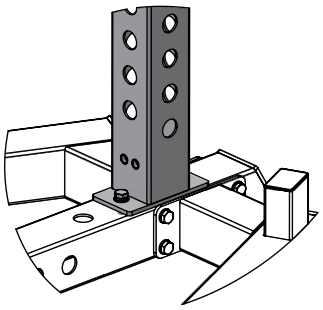

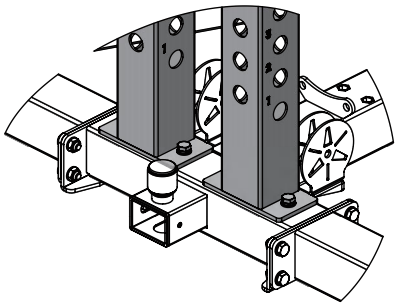

STEP 3 -PARTS & HARDWARE

15 x2 3129 Guard

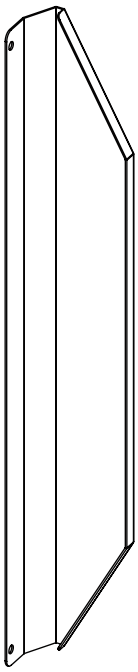

18 x1 3129 Guard Fixing Pipe Assembly

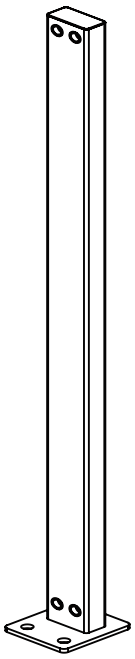

16 x4

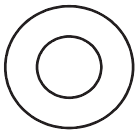

8 Flat Washer

6 x3

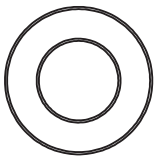

10 Flat Washer

12 x3



10 Spring Washer

17 x4

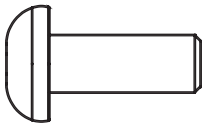

M8×20mm

9 x3

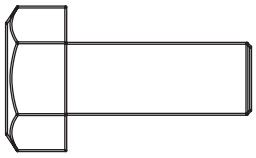

M10×25mm

STEP 3 -ASSEMBLY

Throughout this manual RIGHT and LEFT is defined as if you are standing in front of and facing the equipment.

Fully tighten this step's hardware

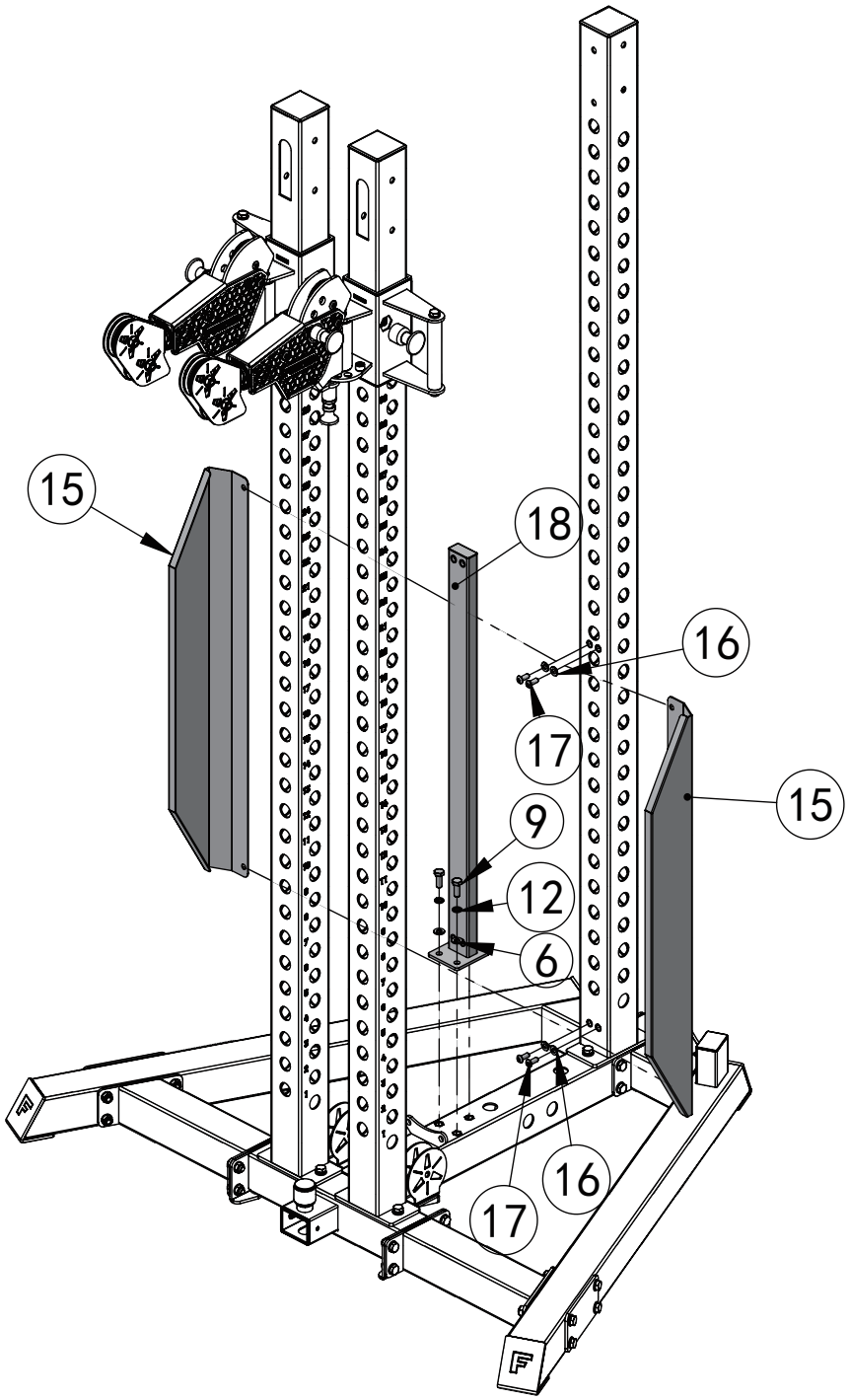

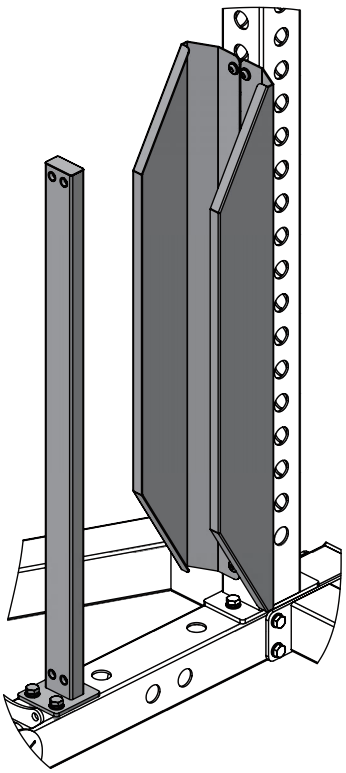

STEP 4 –PARTS & HARDWARE

22 **x2** **2025 Long Guide Rod Pipe Assembly**



20 **x1** **90KG Counterweight Assembly (Top Belt with Wire)**

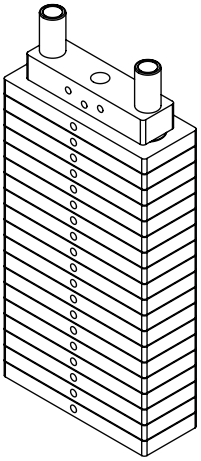

21 **x1** **24 + 1 Lifting Rod**



24 **x1** **10×60 Straight Elastic Cylindrical Pin**

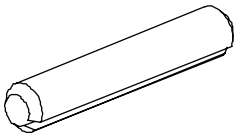

25 **x2** **3141 Counterweight Support Weldment**

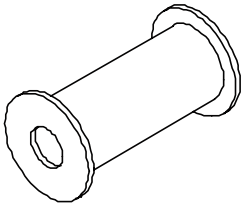

26 **x4** **3129 Rubber Band Hanging Shaft**

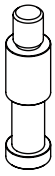

23 **x2** **60 - 27 Shock Absorption Pad**

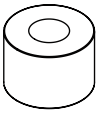

19 **x1** **ϕ 10×100 Magnetic Pull Pin - Black Head, Rope - free, F Mark**

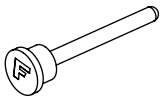

STEP 4- ASSEMBLY

As shown in the figure, first assemble the component 24/21/ counterweight top plate together, and then install the assembled component onto the main body.

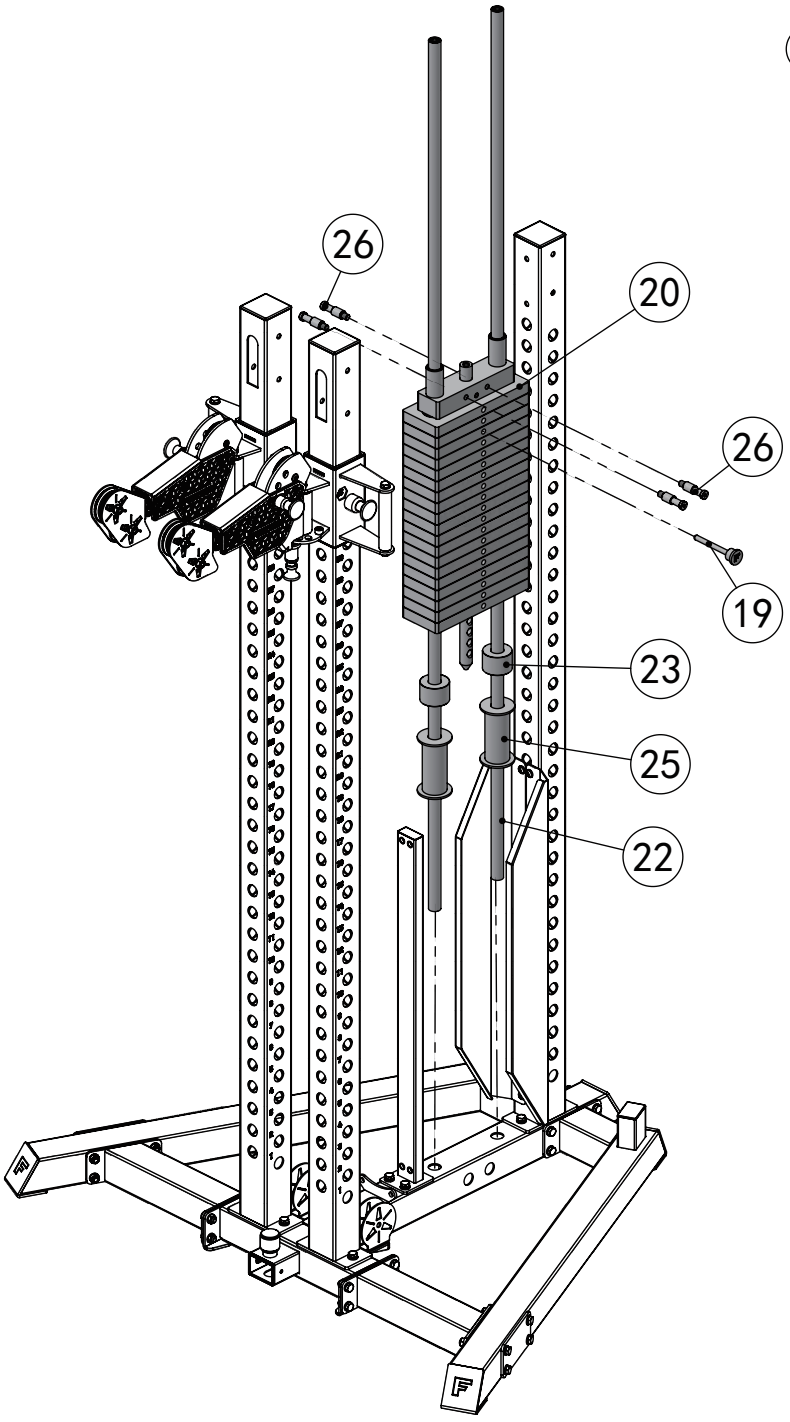

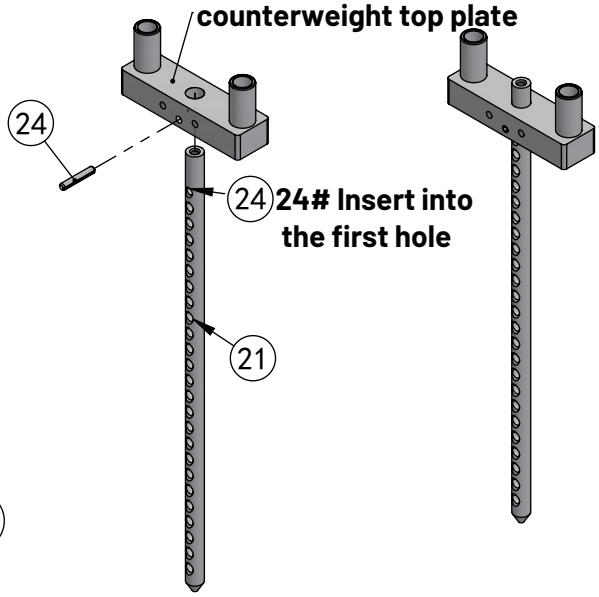

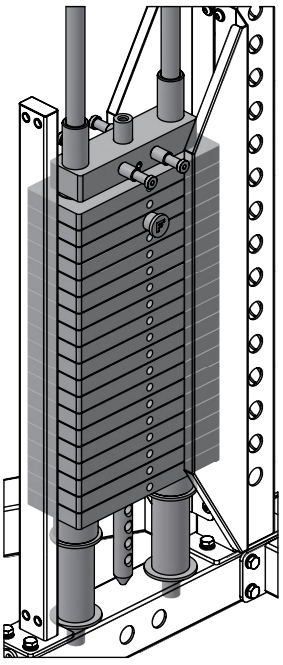

STEP 5 -PARTS & HARDWARE

27 x1 3129 Top Beam Pipe Assembly

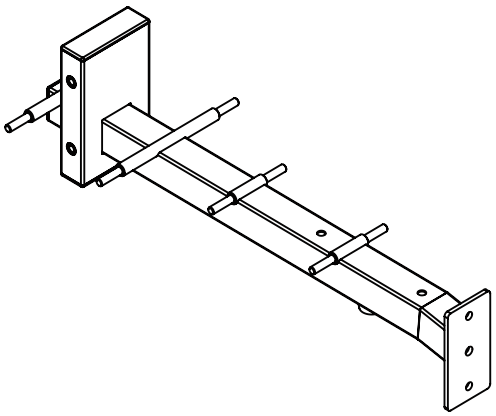

28 x2 90 Aluminum Alloy Pulley

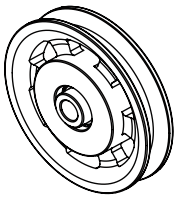

29 x2

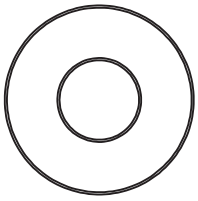

Large Flat Washer

8 x4



M10 Lock Nut

6 x6

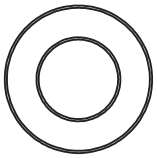

10 Flat Washer

9 x 2

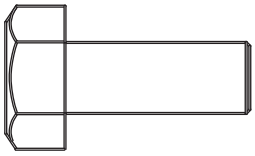

M10×25mm

30 x2



M10×95mm

STEP 5- ASSEMBLY

Before assembling the No. 27 part, first assemble the No. 28 part onto the No. 27 part and tighten the nut. Then, assemble the fully assembled No. 27 part together with the main body.

Hand tighten this step's hardware

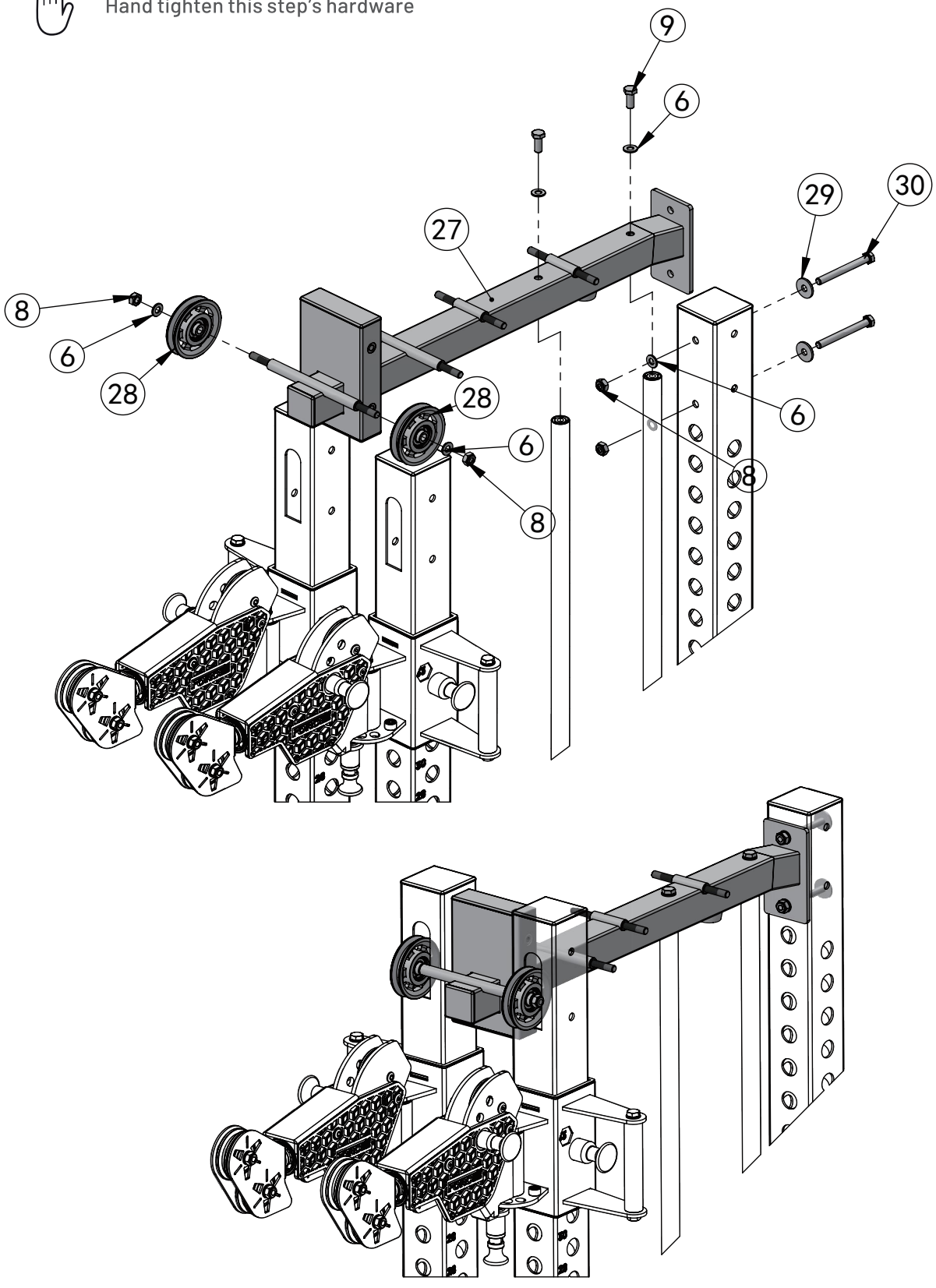

STEP 6- PARTS & HARDWARE

32 x1 3141 Counterweight Block Pulley Frame Assembly

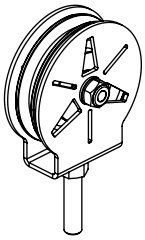

28 x6 90 Aluminum Alloy Pulley

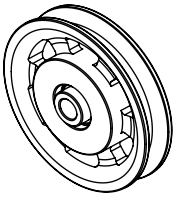

6 x6

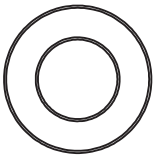

10 Flat Washer

8 x6



M10 Lock Nut

STEP 6 -ASSEMBLY

The assembly methods on the left and right are the same.

Fully tighten this step's hardware

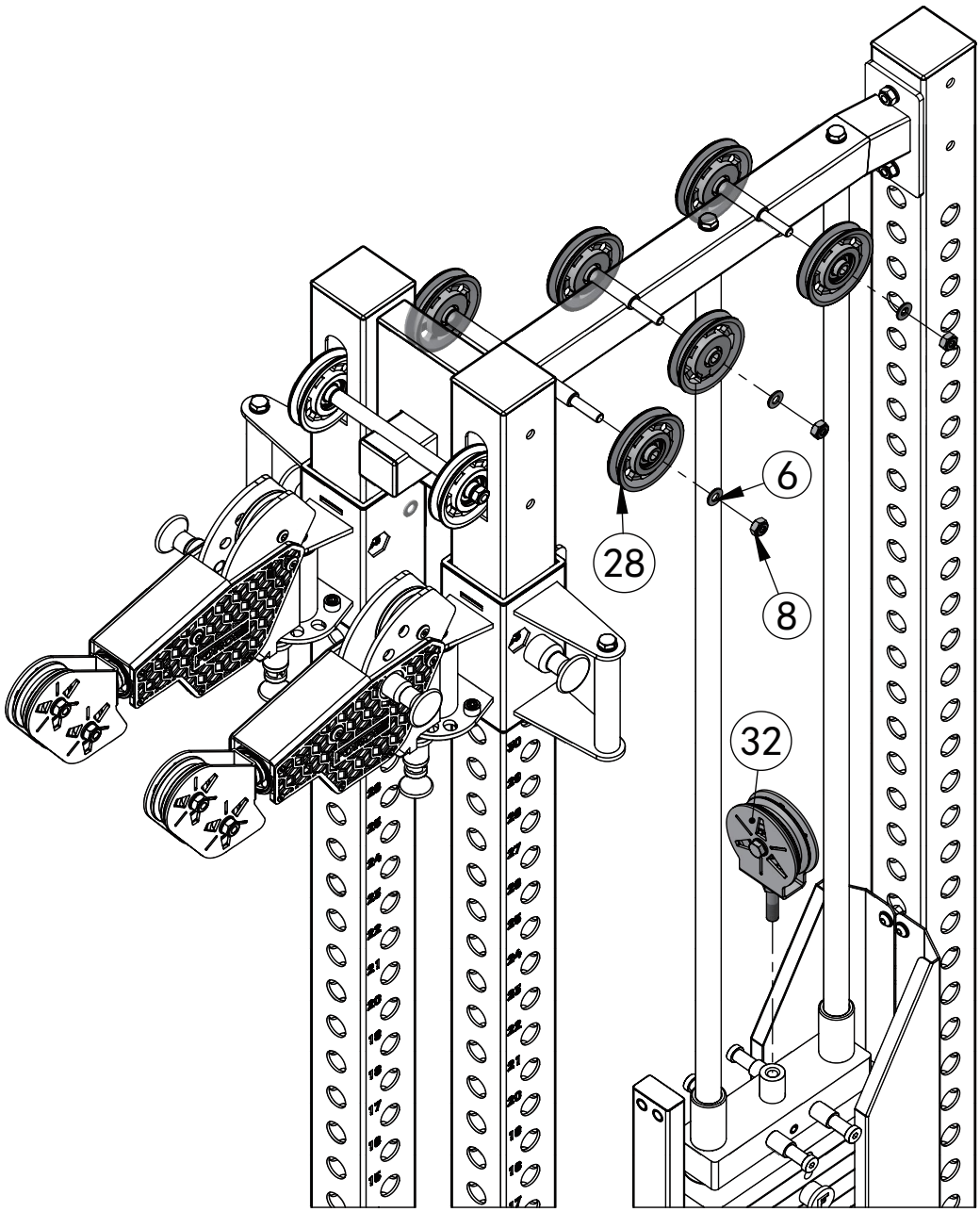

STEP 7 -PARTS & HARDWARE

31 **x2** **Movable Pulley Frame Assembly (USA)**

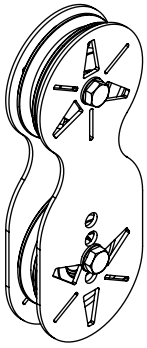

34 **x1** 3129 **Ball - Ball Steel Wire Rope Assembly**

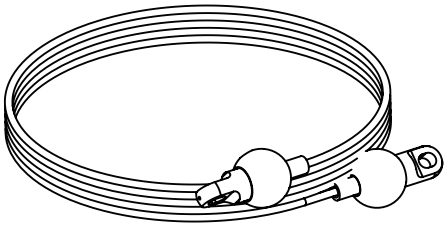

Diagram of Steel Wire Rope Ball Head Assembly and Disassembly

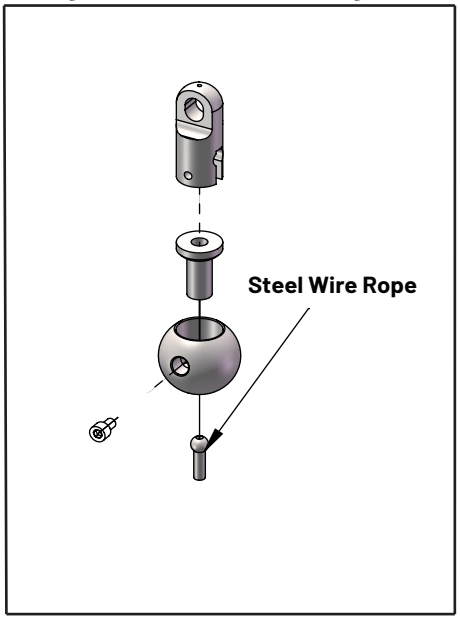

STEP 7 - ASSEMBLY

Throughout this manual RIGHT and LEFT is defined as if you are standing in front of and facing the equipment.

Before assembling the wire rope, please first follow the disassembly and assembly diagram of the ball head to remove the wire rope ball head. After the wire rope is assembled, restore the original state.

Fully tighten this step's hardware

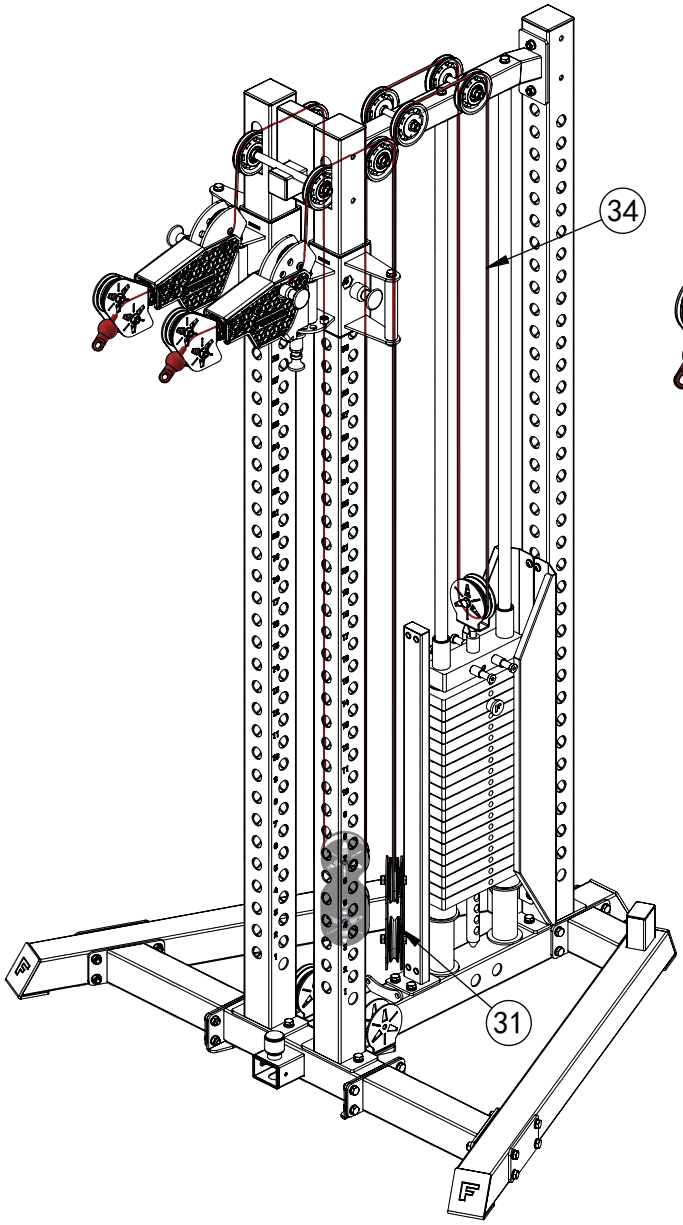

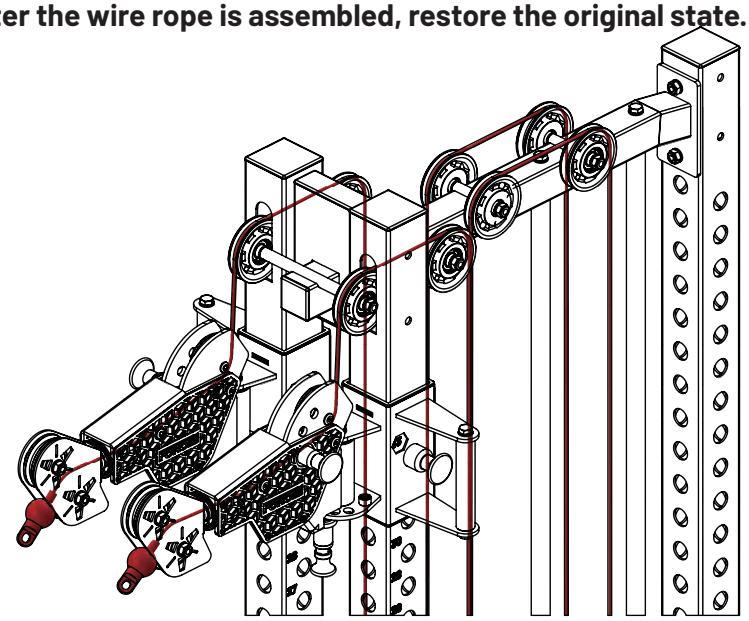

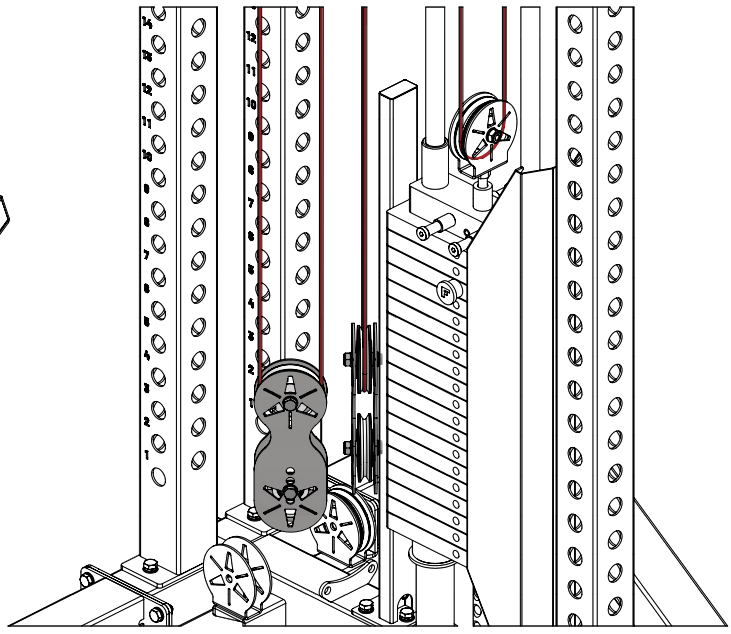

STEP 8- PARTS & HARDWARE

28 x2 90 Aluminum Alloy Pulley

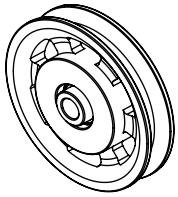

35 x2 3129 Nose Steel Wire Rope

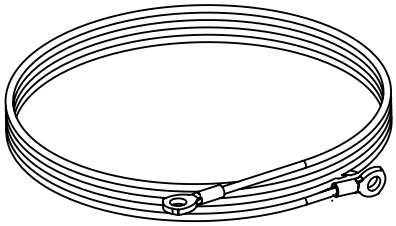

6 x12

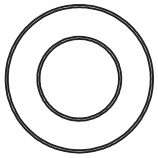

10 Flat Washer

8 x6



M10 Lock Nut

9 x4

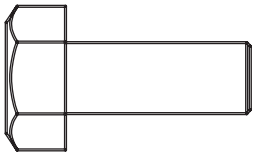

M10×25mm

33 x2



M10×45mm

STEP8 - ASSEMBLY

Throughout this manual RIGHT and LEFT is defined as if you are standing in front of and facing the equipment.

The left and right assemblies are the same. According to the selectable assembly holes, adjust the tightness of the steel wire rope.

Fully tighten this step's hardware

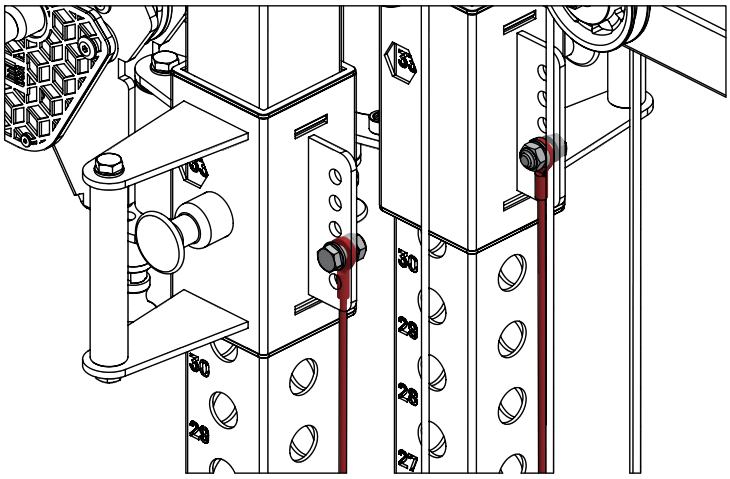

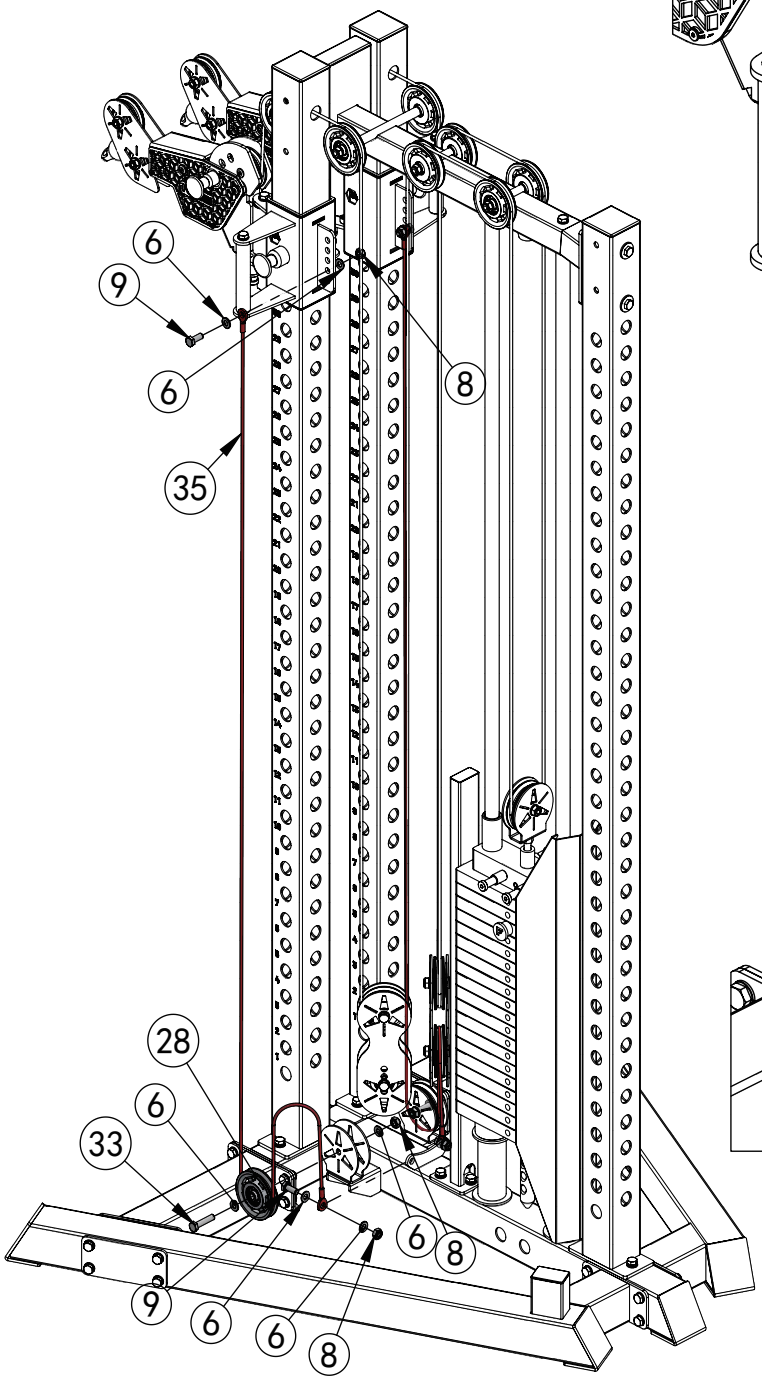

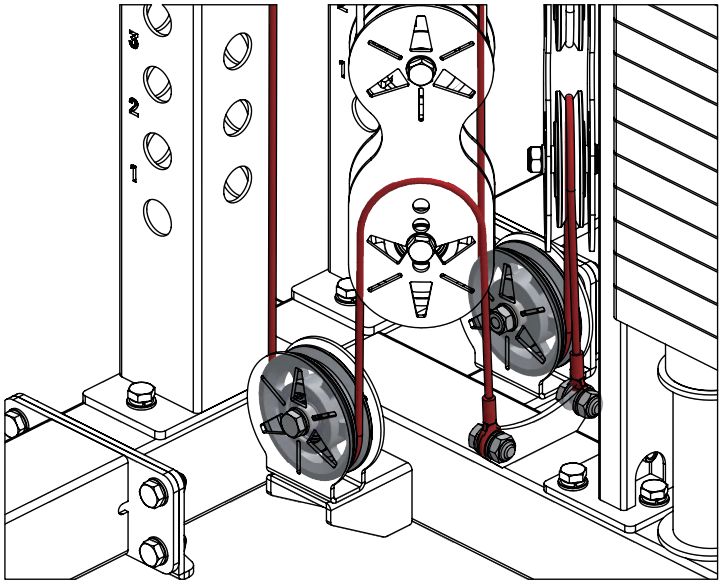

STEP 9- PARTS & HARDWARE

36 x1 3129 Upper Fixing Right Plate

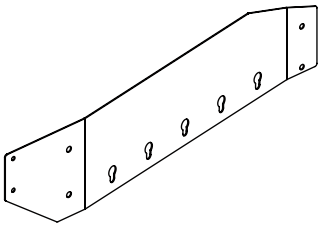

37 x1 3129 Upper Fixing Left Plate

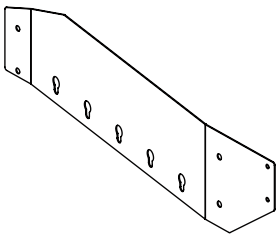

38 x1 3129 Decorative Fixing Plate Assembly

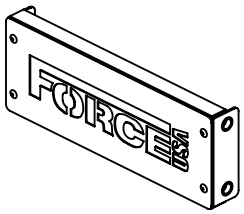

16 x4 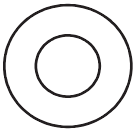 8 Flat Washer

8 x2  M10 Lock Nut

6 x8 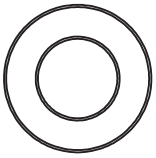 10 Flat Washer

12 x4 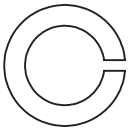 10 Spring Washer

39 x4 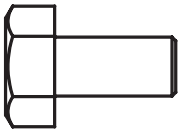 M8×16mm

30 x2 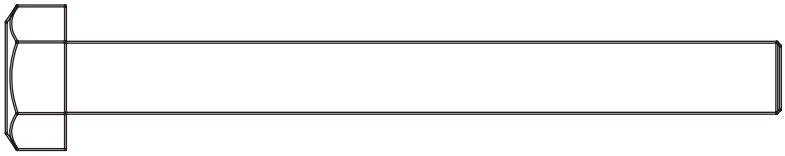 M10×95mm

7 x4 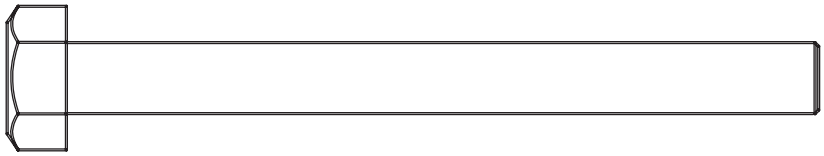 M10×100mm

STEP9- ASSEMBLY

Throughout this manual RIGHT and LEFT is defined as if you are standing in front of and facing the equipment.

The assembly methods on the left and right are the same.

Fully tighten this step's hardware

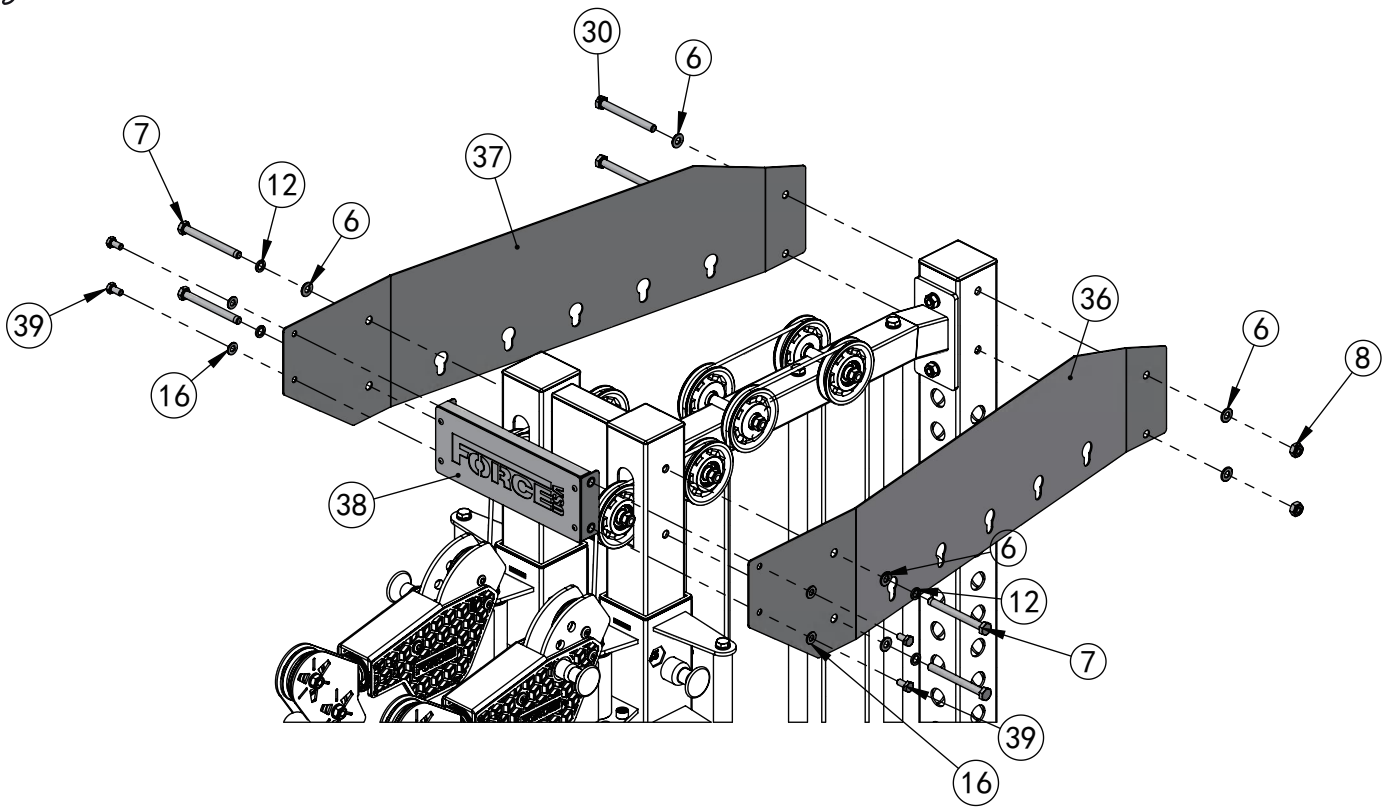

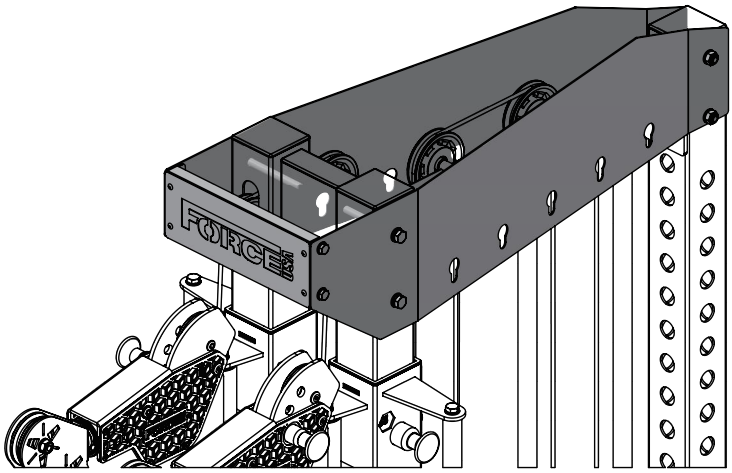

STEP10-PARTS & HARDWARE

15 x2 3129 Guard

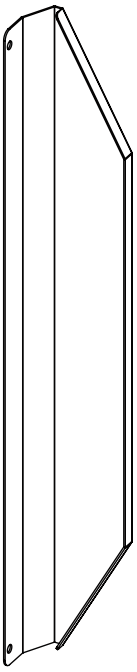

43 x1 3129 Foot Pedal Hook Assembly

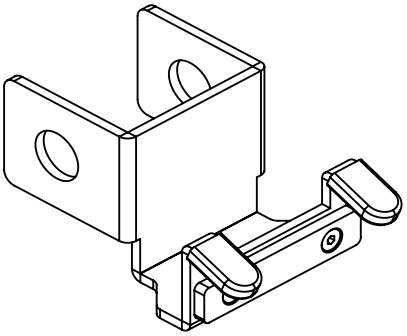

44 x2 Screw Bushing

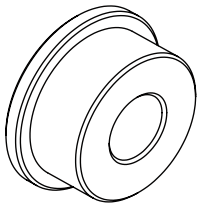

16 x4 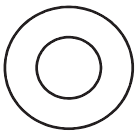 8 Flat Washer

17 x4 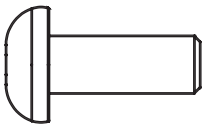 M8×20mm

8 x1  M10 Lock Nut

45 x1 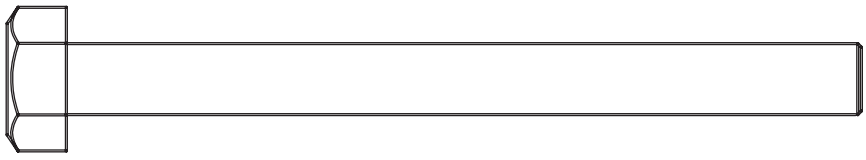 M10×105mm

STEP10-ASSEMBLY

Throughout this manual RIGHT and LEFT is defined as if you are standing in front of and facing the equipment.

Fully tighten this step's hardware

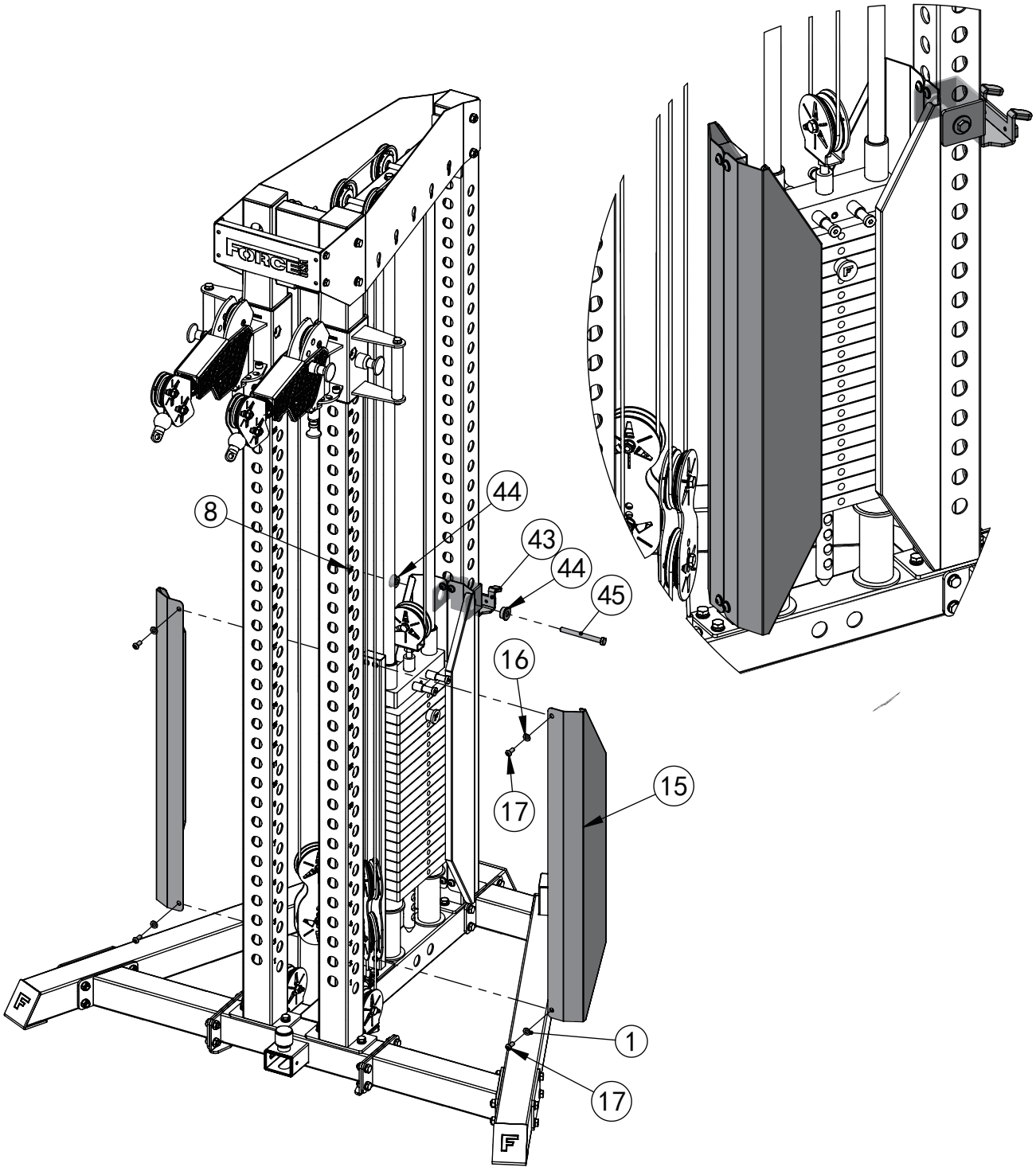

STEP11- PARTS & HARDWARE (User option/Selection)

52 **x4** **3129 Foot Fixing Plate**

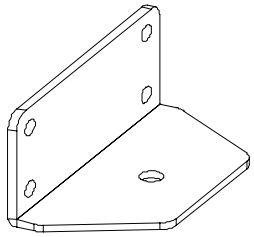

STEP11- ASSEMBLY （User option/Selection）

Users can select the 52 components based on the requirements of the machine. Before assembly, the steps 1②③④⑤ in the assembly instructions need to be removed in advance. Then, assemble the 52 components according to the diagram. The assembly fasteners used are those for removing components ⑥⑧⑨.

Fully tighten this step's hardware

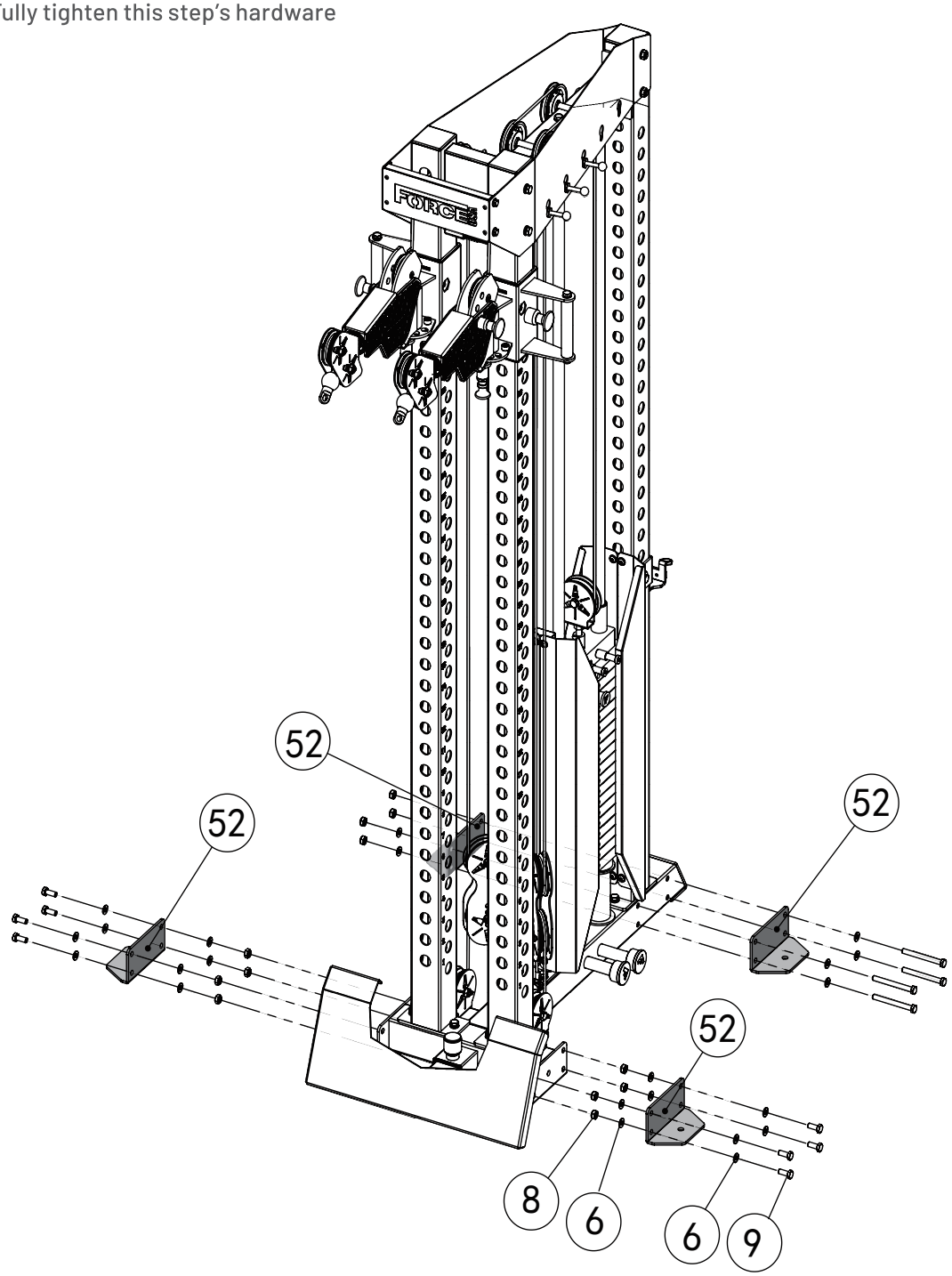

ATTACHMENTS AND ACCESSORIES

Illustations may appear different than actual attachments

42 **x6** **50 Long Quick Pull Pin Assembly**

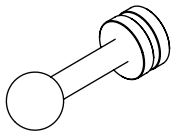

47 **x1** **FORCEUSA Large Pull Handle Assembly**

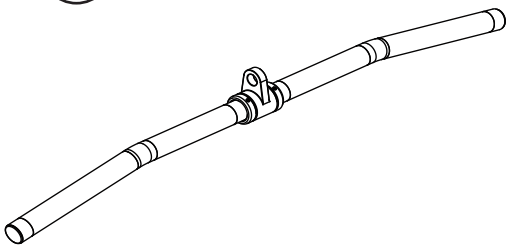

41 **x2** **25 Ball Magnetic Pull Pin**

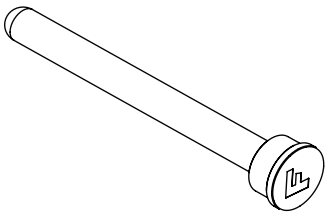

40 **x1** **3129 Foot Pedal Assembly**

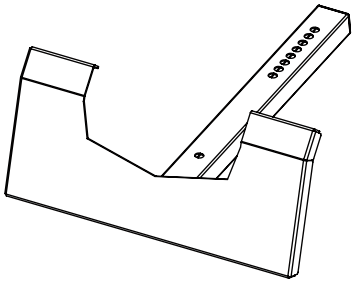

48 **x1** **3141 Puller**

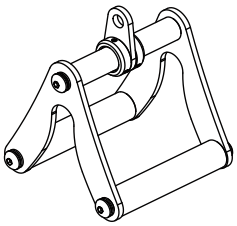

51 **x1** **3129 Double Pull Tab Assembly**

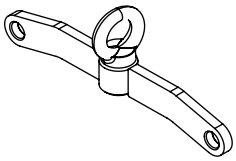

50 **x4** **Black Hoist**

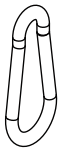

49 **x2** **Black Chain**



46 **x2** **FORCEUSA Aluminum Alloy Handle Strap**

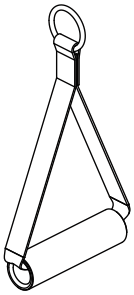

EXPLODED DIAGRAMS

2 **x1** **3129 Bottom Beam Right Side Pipe Assembly**

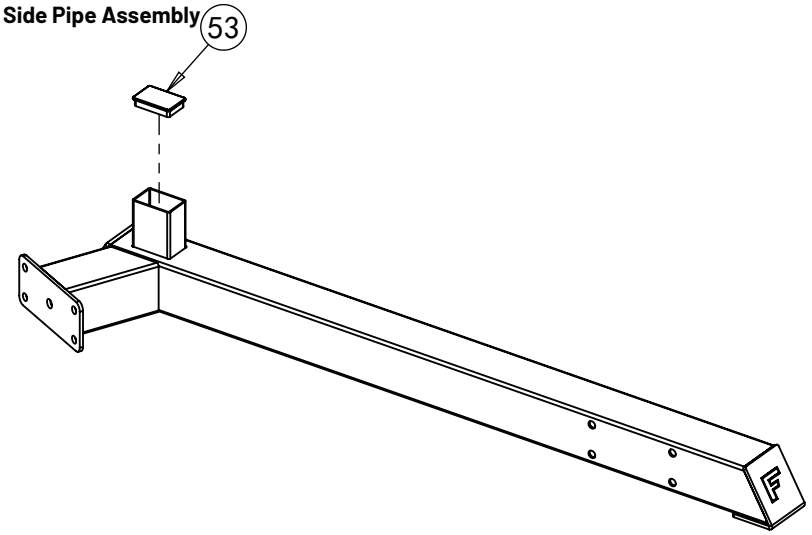

NO.	Part Name	Specification	QTY
53	40×60 Square Tube Plug	□40×60×2	1

1 **x1** **3129 Rear Bottom Beam Tube Assembly**

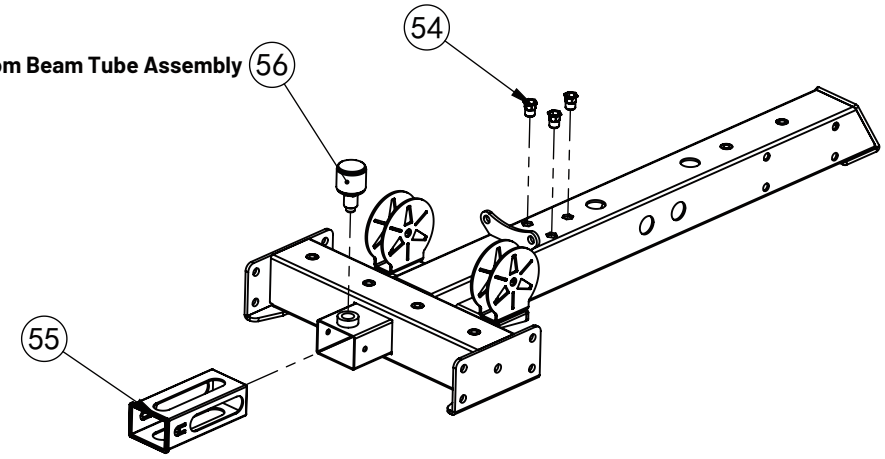

NO.	Part Name	Specification	QTY
54	M10 Countersunk Hexagon Rivet Nut	M10	3
55	F50x70-40x60L Reducer Bushing	F50-70/F40-60	1
56	Plum Blossom Aluminum Pull Pin - φ12	φ12	1

EXPLODED DIAGRAMS

10 **x1** **3129 Rear Column Assembly**

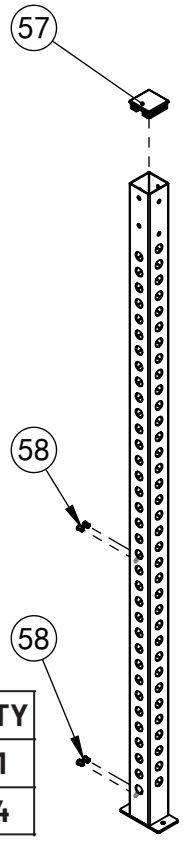

NO.	Part Name	Specification	QTY
57	75 Square Tube Plug	□75×75×2.5	1
58	Hexagon Rivet Nut	M8	4

11 **x2** **3129 Front Column Assembly**

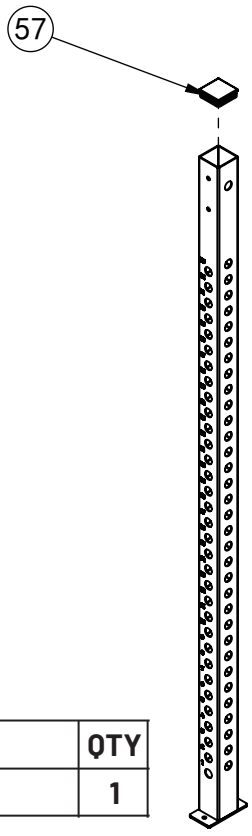

NO.	Part Name	Specification	QTY
57	75 Square Tube Plug	□75×75×2.5	1

EXPLODED DIAGRAMS

10 **x1** **3141 Flywheel Slide Sleeve Right**

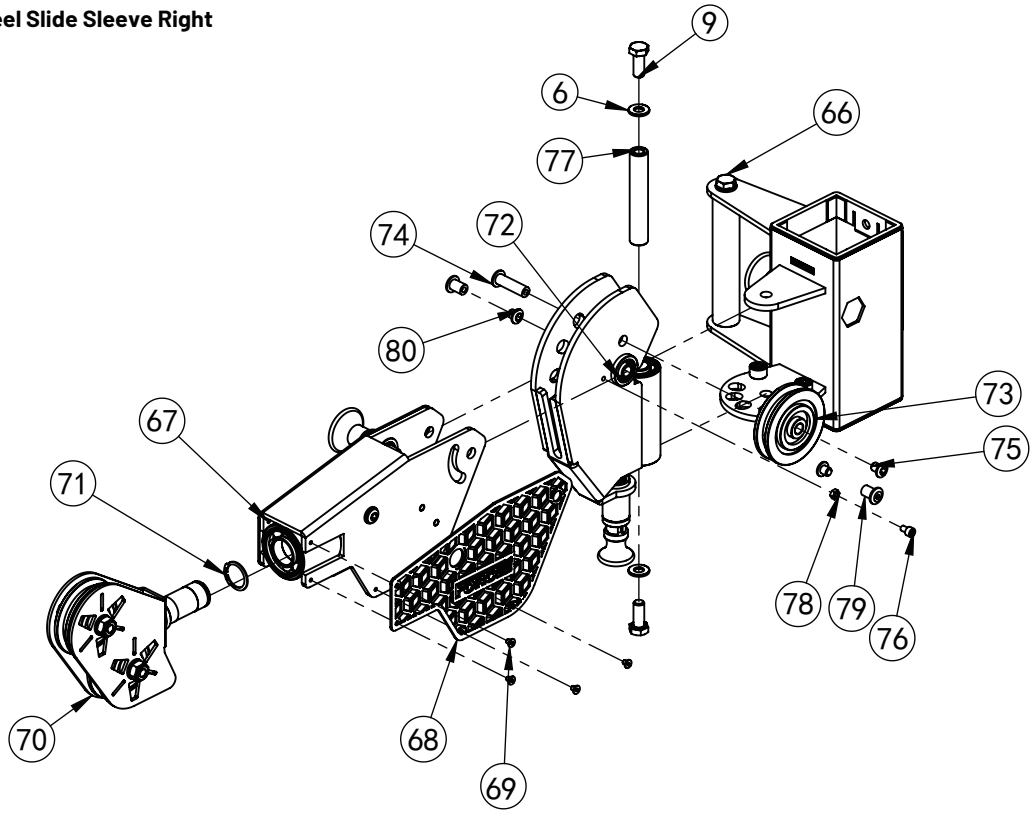

NO.	Part Name	Specification	QTY
66	3141 Bird Slide Sleeve Assembly - Right	Assembly	1
67	3141 Pulley Rotating Assembly	Assembly	1
68	3141 Rocker Arm Nameplate (External)	T2	1
69	M4×5 Flat Head Inner Hexagon Screw (Black)	M4×5	4
70	3141 Universal Pulley Frame Assembly	Assembly	1
71	Elastic Retaining Ring for 25 Shafts	φ25	1
72	3141 Inner Pulley Sheet Assembly	Assembly	1
73	φ75 Aluminum Alloy Pulley	φ75	1
74	M8X35 Chamfered Locking Screw	M8*35	1
75	M8X35 Chamfered Locking Screw Head	M8*35	1
6	φ10 Flat Washer(Black)	φ10	2
9	M10×25 Hexagon Head Bolt (Black)	M10×25	2
76	M5×8 Inner Hexagon Cylindrical Head Screw	M5×8	1
77	φ17×97 - M10 Inner Shaft	φ17*97	1
78	M5 Hexagon Nut (Black)	M5	1
79	M8X14 Chamfered Locking Screw	M8*14	2
80	M8X14 Chamfered Locking Screw Head	M8*14	2

EXPLODED DIAGRAMS

66 **x1** **3141 Bird Slide Sleeve Assembly - Right**

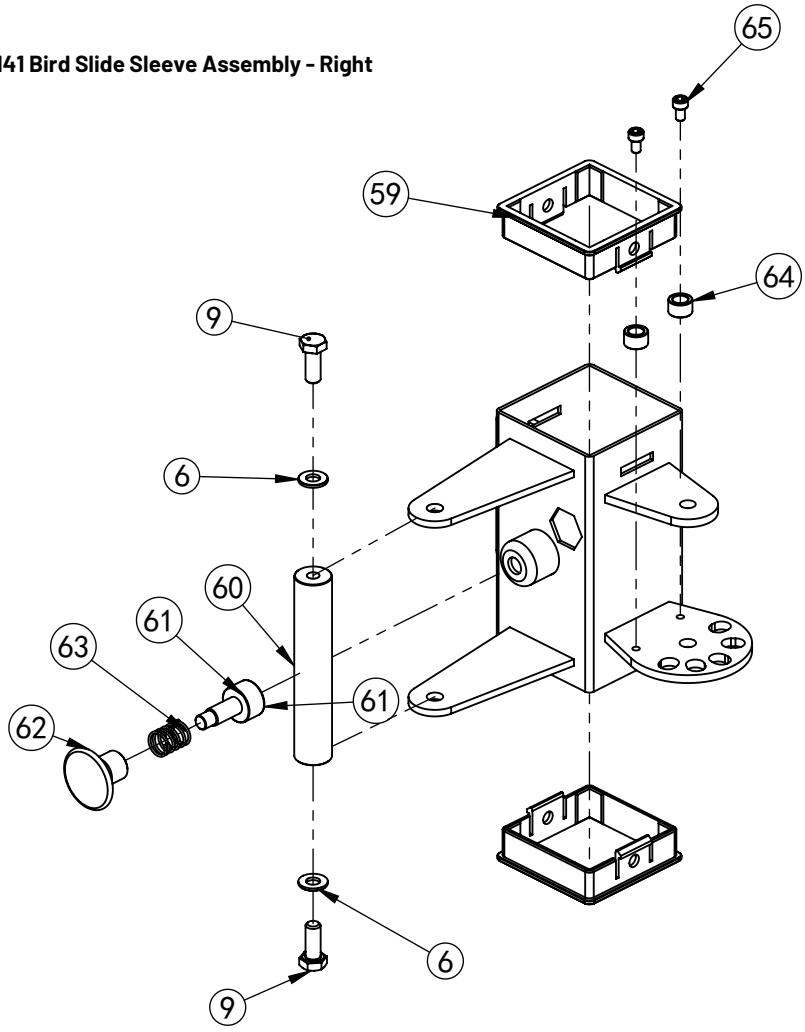

NO.	Part Name	Specification	QTY
59	89 - 75 Bushing	75 - 89	2
60	φ25×138 Handle	φ25×138	1
6	Φ10 Flat Washer (Black)	φ10	2
9	M10×25 Hexagon Head Bolt (Black)	M10×25	2
61	25 Pull Pin Shaft	φ25	1
62	25 Pull Pin Handle	φ44	1
63	3141 Pull Pin Spring	Outer Diameter 15	1
64	M6 Anti - collision Sleeve	φ16	2
65	M6×10 Inner Hexagon Cylindrical Head Screw	M6×10	2

EXPLODED DIAGRAMS

67 **x1** **3141 Pulley Rotating Assembly**

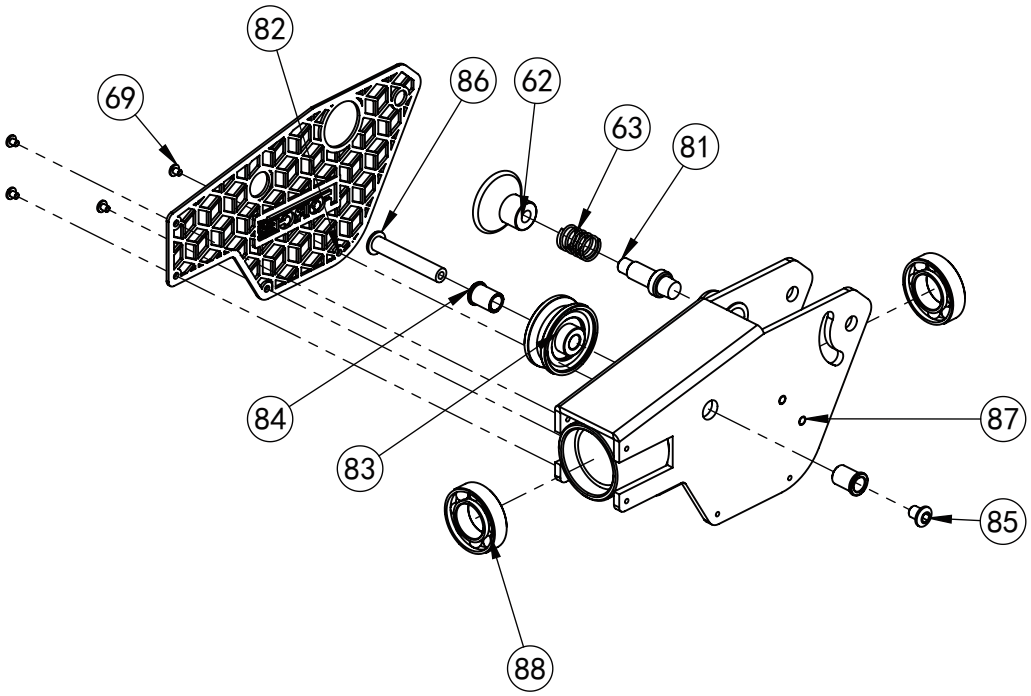

NO.	Part Name	Specification
81	12 Pull Pin Shaft	φ18
62	25 Pull Pin Handle	φ44
82	Inside 3141 Rocker Arm Nameplate	T2
83	φ50 Aluminum Alloy Pulley	Φ50
84	3141 Bird Spacer Sleeve	φ16
85	M8X60 Chamfered Locking Screw Head	M8*60
86	M8X60 Chamfered Locking Screw	M8*60
69	M4×5 Flat Head Inner Hexagon Screw (Black)	M4×5
87	3141 Plastic Pad	φ15
88	6005 Deep Groove Ball Bearing	6005
63	3141 Pull Pin Spring	Outer Diameter 15

EXPLODED DIAGRAMS

72 **x1** **3141 Inner Pulley Blade Assembly**

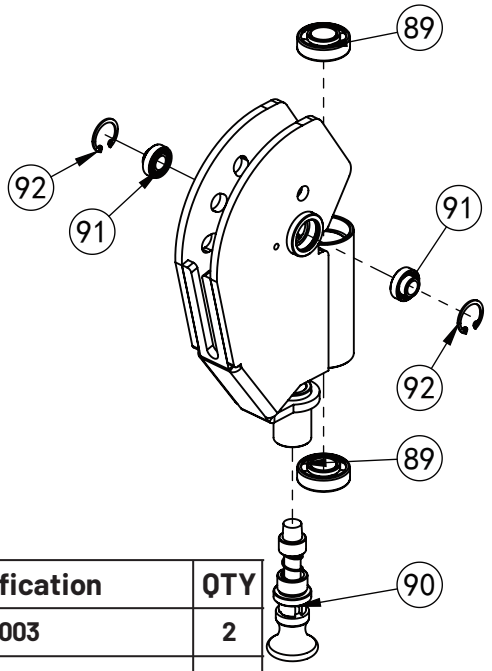

NO.	Part Name	Specification	QTY
89	6003 Deep Groove Ball Bearing - 14mm Width	6003	2
90	Φ12×M20×40 Taper Head Positioning Pull Pin - Aluminum Alloy	Assembly	1
91	61900 Deep Groove Ball Bearing - 10mm Width	61900 Single - side Step 4mm	2
92	Elastic Retaining Ring for 22mm Hole	Φ22	2

70 **x2** **3141 Universal Pulley Frame Assembly**

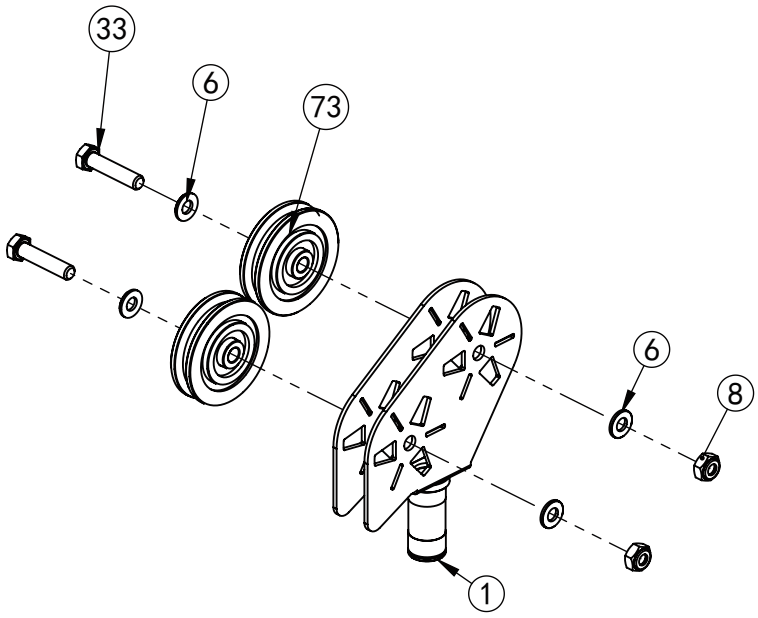

NO.	Part Name	Specification	QTY
73	Φ75 Aluminum Alloy Pulley	Φ75	2
33	M10×45 Hexagon Head Bolt (Black)	M10×45	2
8	M10 Lock Nut (Black)	M10	2
6	Φ10 Flat Washer (Black)	Φ10	4

EXPLODED DIAGRAMS

14 **x1** **3141 Bird Slide Sleeve - Left**

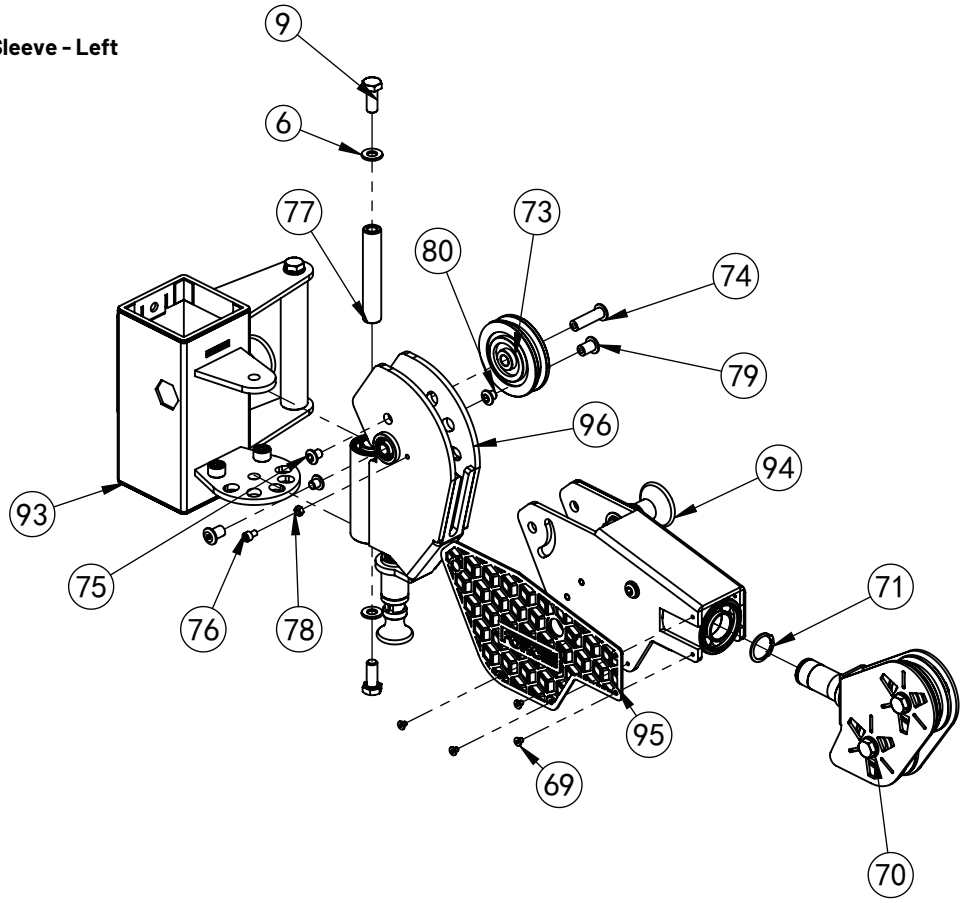

NO.	Part Name	Specification	QTY
93	3141 Bird Slide Sleeve Assembly - Left	Assembly	1
94	3141 Pulley Rotating Assembly - Left	Assembly	1
95	3141 Outside Rocker Arm Nameplate - Left	T2	1
69	M4×5 Flat Head Inner Hexagon Screw (Black)	M4×5	4
70	3141 Universal Pulley Frame Assembly	Assembly	1
71	Elastic Retaining Ring for 25 Shafts	Φ25	1
96	3141 Inner Pulley Sheet Assembly - Left	Assembly	1
73	Φ75 Aluminum Alloy Pulley	Φ75	1
74	M8X35 Chamfered Locking Screw	M8*35	1
75	M8X35 Chamfered Locking Screw Head	M8*35	1
6	Φ10 Flat Washer (Black)	Φ10	2
9	M10×25 Hexagon Head Bolt (Black)	M10×25	2
76	M5×8 Inner Hexagon Cylindrical Head Screw	M5×8	1
77	Φ17X97 - M10 Internal Thread Shaft	Φ17*97	1
78	M5 Hexagon Nut (Black)	M5	1
79	M8X14 Chamfered Locking Screw	M8*14	2
80	M8X14 Chamfered Locking Screw Head	M8*14	2

EXPLODED DIAGRAMS

93 **x1** **3141 Bird Slide Sleeve Assembly - Left**

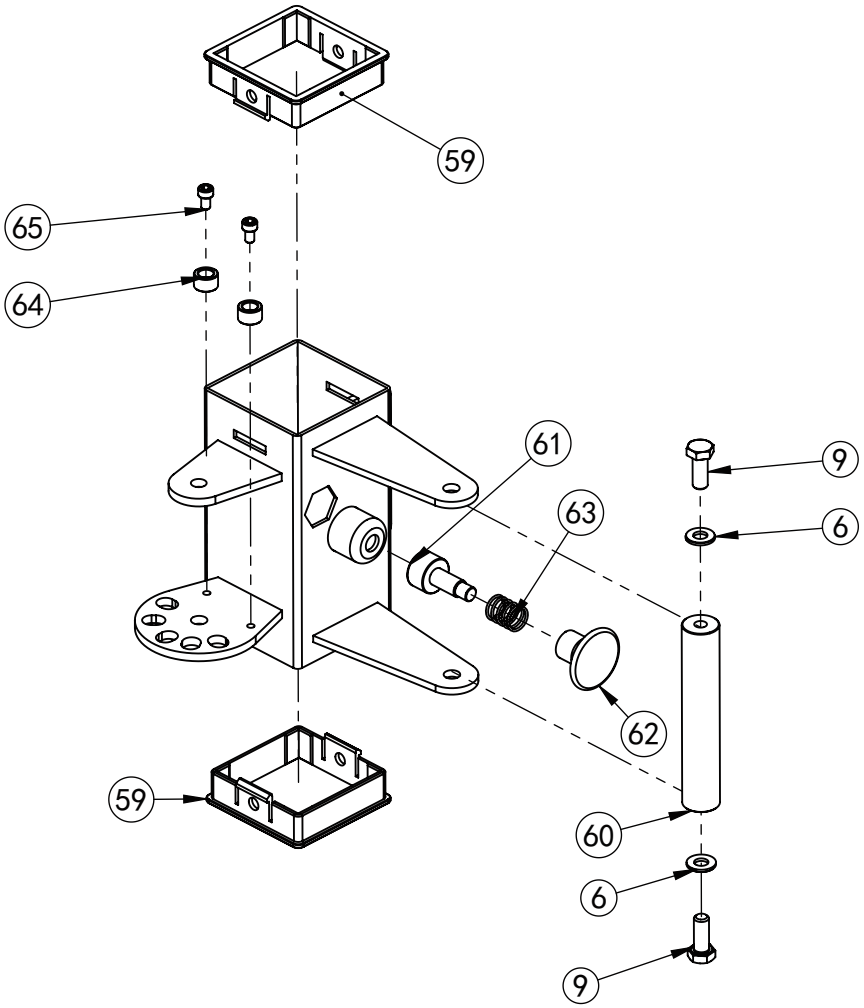

NO.	Part Name	Specification	QTY
59	89 - 75 Bushing	75 - 89	2
60	φ25×138 Handle	φ25×138	1
6	Φ10 Flat Washer (Black)	φ10	2
9	M10×25 Hexagon Head Bolt (Black)	M10×25	2
61	25 Pull Pin Shaft	φ25	1
62	25 Pull Pin Handle	φ44	1
63	3141 Pull Pin Spring	Outer Diameter 15	1
64	M6 Anti - collision Sleeve	φ16	2
65	M6×10 Inner Hexagon Cylindrical Head Screw	M6×10	2

EXPLODED DIAGRAMS

94 **x1** **3141 Pulley Rotating Assembly - Left**

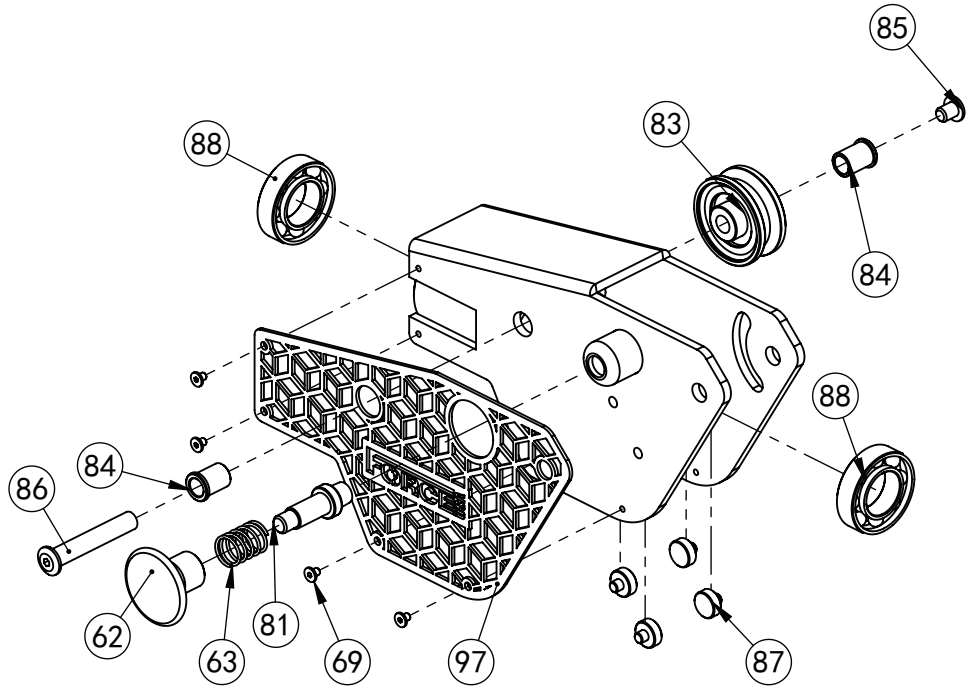

NO.	Part Name	Specification	QTY
81	12 Pull Pin Shaft	φ18	1
62	25 Pull Pin Handle	φ44	1
97	Inside 3141 Rocker Arm Nameplate	T2	1
83	φ50 Aluminum Alloy Pulley	φ50	1
84	3141 Bird Spacer Sleeve	φ16	2
85	M8X60 Chamfered Locking Screw Head	M8*60	1
86	M8X60 Chamfered Locking Screw	M8*60	1
69	M4×5 Flat Head Inner Hexagon Screw (Black)	M4×5	4
87	3141 Plastic Pad	φ15	4
88	6005 Deep Groove Ball Bearing	6005	2
63	3141 Pull Pin Spring	Outer Diameter 15	1

EXPLODED DIAGRAMS

96 **x1** **3141 Inner Pulley Blade Assembly - Left**

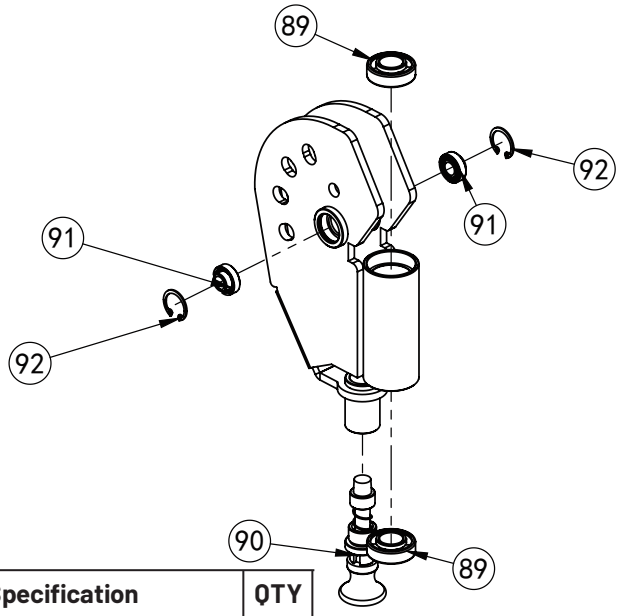

NO.	Part Name	Specification	QTY
89	6003 Deep Groove Ball Bearing - 14mm Width	6003	2
90	φ12XM20X40 Taper Head Positioning Pull Pin - Aluminum Alloy	Assembly	1
91	61900 Deep Groove Ball Bearing - 10mm Width	61900 Single - side Step 4mm	2
92	Elastic Retaining Ring for 22mm Hole	φ22	2

18 **x1** **3129 Guard Fixing Pipe Assembly**

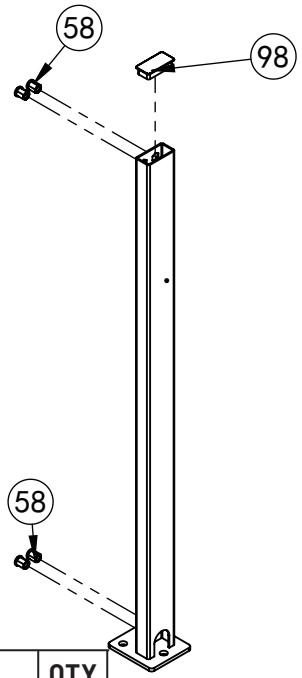

NO.	Part Name	Specification	QTY
58	Hexagon Rivet Nut	M8	4
98	25×50 Square Pipe Inner Plug	□25×50×1.5	1

EXPLODED DIAGRAMS

21 **x2** **2025 Long Guide Rod Pipe Assembly**

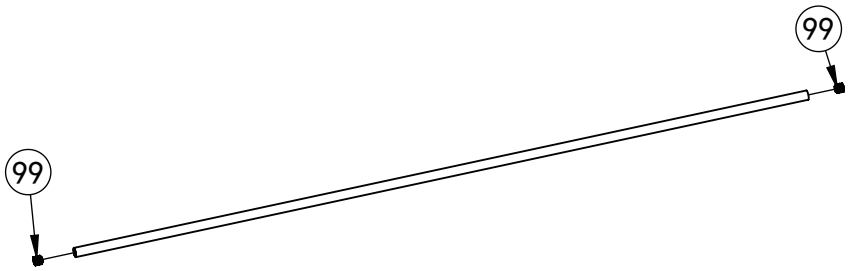

NO.	Part Name	Specification	QTY
99	φ23XM10 Four - layer Spring Washer Nut	φ23 - M10 Four - layer	2

27 **x1** **3129 Top Beam Pipe Assembly**

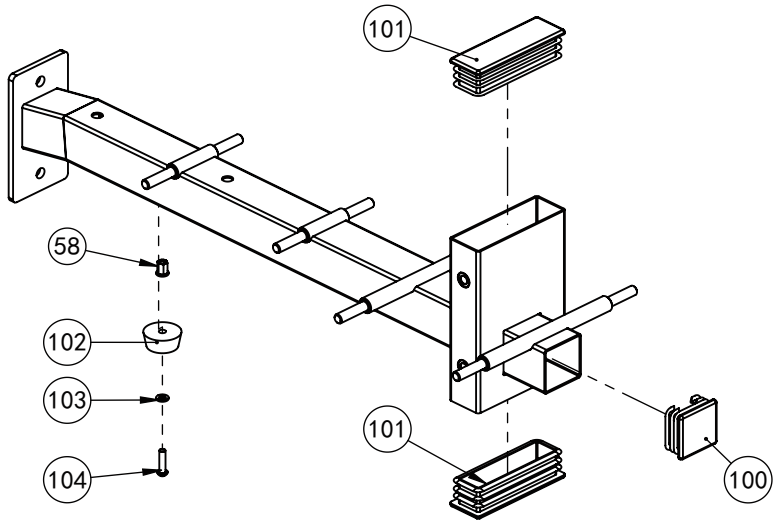

NO.	Part Name	Specification	QTY
100	50 Square Pipe Inner Plug	□50×50×2	1
101	40×120 Square Pipe Inner Plug	□40×120×2	2
58	Hexagon Rivet Nut	M6	1
102	Tapered Buffer Pad	φ37×φ31×φ7×16	1
103	φ6 Flat Washer	φ6	1
104	M6×25 Inner Hexagon Flat Head Screw	M6×25	1

EXPLODED DIAGRAMS

31 **x2** **Movable Pulley Frame Assembly (USA)**

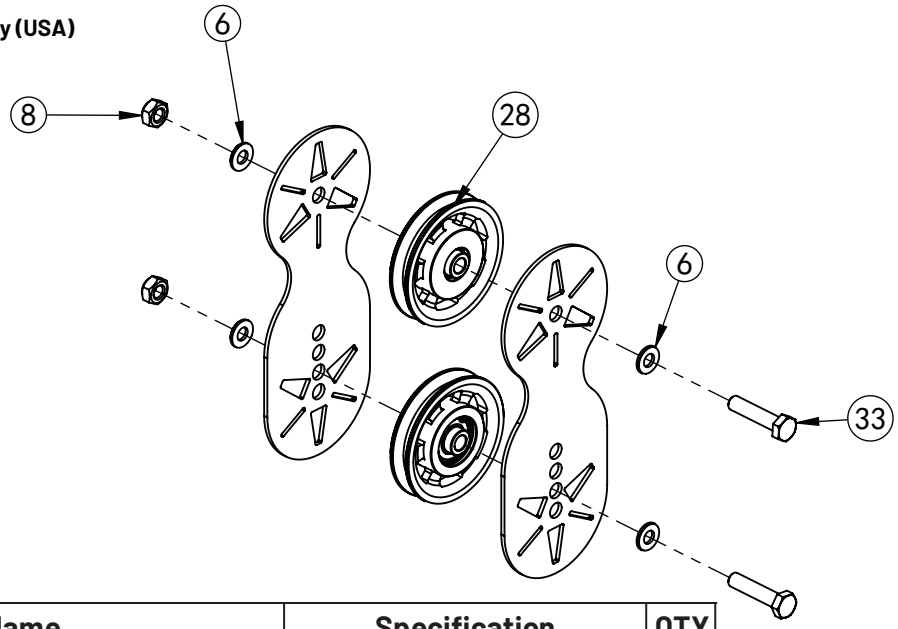

NO.	Part Name	Specification	QTY
28	90 Aluminum Alloy Pulley	ϕ90	2
33	M10×45 Hexagon Head Bolt (Black)	M10×45	2
6	ϕ10 Flat Washer (Black)	ϕ10	4
8	M10 Lock Nut (Black)	M10	2

32 **x1** **3141 Counterweight Block Pulley Frame Assembly**

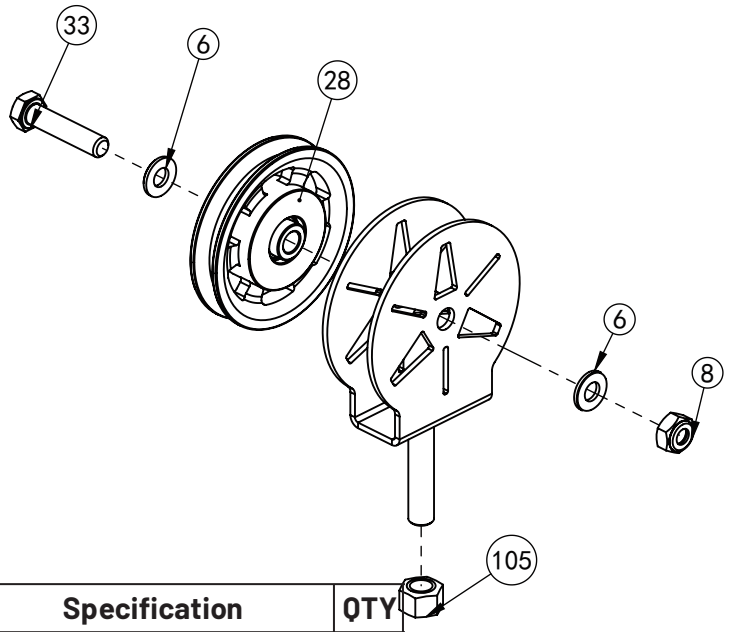

NO.	Part Name	Specification	QTY
28	90 Aluminum Alloy Pulley	ϕ90	1
33	M10×45 Hexagon Head Bolt (Black)	M10×45	1
8	M10 Lock Nut (Black)	M10	1
6	ϕ10 Flat Washer (Black)	ϕ10	2
105	M12 Hexagon Nut	M12	1

EXPLODED DIAGRAMS

38 x1 **3129 Decorative Fixing Plate Assembly**

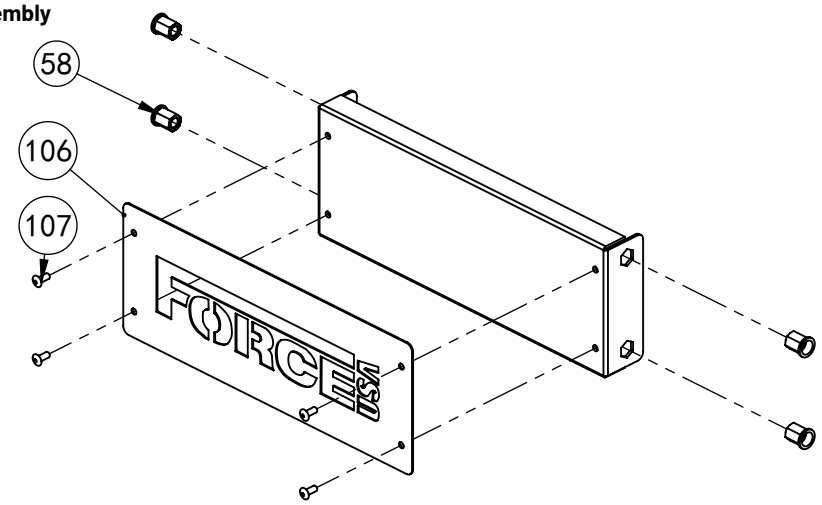

NO.	Part Name	Specification	QTY
106	3129 Stainless Steel Nameplate	T1	1
107	4×10 Oval Head Blind Rivet	4×10	4
58	Hexagon Rivet Nut	M8	4

38 x1 **3129 Foot Pedal Assembly**

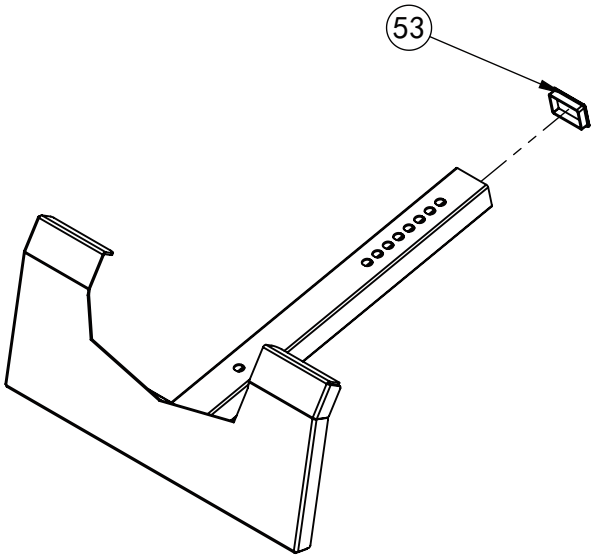

NO.	Part Name	Specification	QTY
53	40×60 Square Pipe Inner Plug	□40×60×2	1

EXPLODED DIAGRAMS

43 x1 **3129 Foot Pedal Hook Assembly**

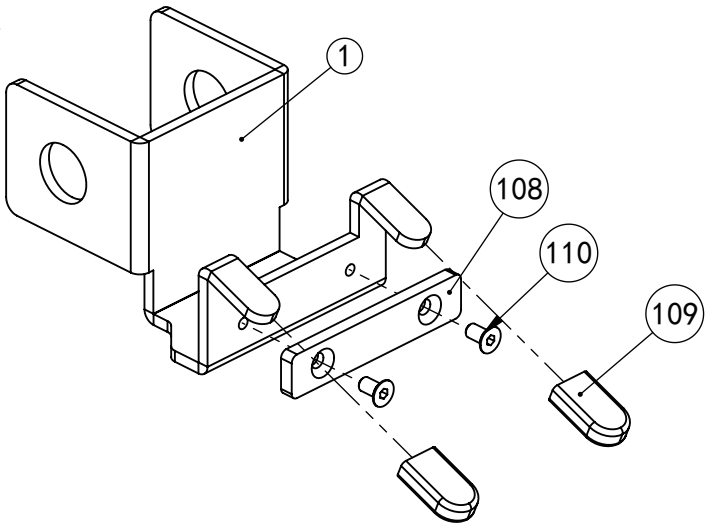

NO.	Part Name	Specification	QTY
108	3129 Foot Pedal Hook Liner Plate	T6	1
109	φ12×φ16×35 Single - end Open Plastic - Coated Sleeve	φ16×φ12×35	2
110	M6×12 Inner Hexagon Countersunk Head Screw	M6×12	2

PARTS LIST

NO.	Part Name	Specification	QTY
1	3129 Rear Bottom Beam Pipe Assembly	Assembly	1
2	3129 Bottom Beam Right Side Pipe Assembly	Assembly	1
3	3129 Front Bottom Beam Side Pipe Weldment	Weldment	2
4	75×160×5 Connecting Plate	T5	2
5	3129 Bottom Beam Left Side Pipe Weldment	Weldment	1
6	φ10 Flat Washer (Black)	φ10	107
7	M10×100 Hexagon Head Bolt (Black)	M10×100	16
8	M10 Lock Nut (Black)	M10	48
9	M10×25 Hexagon Head Bolt (Black)	M10×25	31
10	3129 Rear Column Assembly	Assembly	1
11	3129 Front Column Assembly	Assembly	2
12	φ10 Spring Washer (Black)	φ10	13
13	3141 Bird Slide Sleeve - Right	Assembly	1
14	3141 Bird Slide Sleeve - Left	Assembly	1
15	3129 Guard	T2	4
16	φ8 Flat Washer (Black)	φ8	12
17	M8×20 Inner Hexagon Flat Head Screw (Black)	M8×20	8
18	3129 Guard Fixing Pipe Assembly	Assembly	1
19	φ10×100 Magnetic Pull Pin - Black Head, Rope - free, F Mark	φ10×100	1
20	90KG Counterweight Assembly (Top Belt with Wire)	19 + 1 (90KG)	1
21	24 + 1 Lifting Rod	φ25	1
22	2025 Long Guide Rod Pipe Assembly	Assembly	2
23	60 - 27 Shock Absorption Pad	φ60×φ27×42	2
24	10×60 Straight Elastic Cylindrical Pin	10×φ60	1
25	3141 Counterweight Support Weldment	Weldment	2
26	3129 Rubber Band Hanging Shaft	φ17.8×17 - M12	4
27	3129 Top Beam Pipe Assembly	Assembly	1
28	90 Aluminum Alloy Pulley	φ90	15
29	φ10 Flat Washer (Black)	φ30*φ10*3	2
30	M10×95 Hexagon Head Bolt (Black)	M10×95	4
31	Movable Pulley Frame Assembly (USA)	Assembly	2
32	3141 Counterweight Block Pulley Frame Assembly	Assembly	1
33	M10×45 Hexagon Head Bolt (Black)	M10×45	11
34	3129 Ball - Ball Steel Wire Rope Assembly	Assembly	1
35	3129 Nose Steel Wire Rope	Assembly	2
36	3129 Upper Fixing Right Plate	T2	1
37	3129 Upper Fixing Left Plate	T2	1
38	3129 Decorative Fixing Plate Assembly	Assembly	1

PARTS LIST

NO.	Part Name	Specification	QTY
39	M8×16 Hexagon Head Bolt (Black)	M8×16	4
40	3129 Foot Pedal Assembly	Assembly	1
41	25 Ball Magnetic Pull Pin	Assembly	2
42	50 Long Quick Pull Pin Assembly	Assembly	6
43	3129 Foot Pedal Hook Assembly	Assembly	1
44	Screw Bushing	φ30×φ11×13	2
45	M10×105 Hexagon Head Bolt (Black)	M10×105	1
46	FORCEUSA Aluminum Alloy Handle Strap	For forceusa	2
47	FORCEUSA Large Pull Handle Assembly	Assembly	1
48	3141 Puller	Assembly	1
49	Black Chain	φ6	2
50	Black Hoist	Standard Part	4
51	3129 Double Pull Tab Assembly	Assembly	1
52	3129 Foot Fixing Plate	T5	4
53	40×60 Square Pipe Inner Plug	□40×60×2	2
54	M10 Countersunk Hexagon Rivet Nut	M10	3
55	F50x70 - 40x60L Reducing Sleeve	F50 - 70/F40 - 60	1
56	Plum Blossom Pull Pin - φ12	φ12	1
57	75 Square Pipe Inner Plug	□75×75×2.5	3
58	Hexagon Rivet Nut	M8	12
59	89 - 75 Bushing	75 - 89	4
60	φ25×138 Handle	φ25×138	2
61	25 Pull Pin Shaft	φ25	2
62	25 Pull Pin Handle	φ44	4
63	3141 Pull Pin Spring	Outer Diameter 15	4
64	M6 Anti - collision Sleeve	φ16	4
65	M6×10 Inner Hexagon Cylindrical Head Screw	M6×10	4
66	3141 Bird Slide Sleeve Assembly - Right	Assembly	1
67	3141 Pulley Rotating Assembly	Assembly	1
68	3141 Rocker Arm Nameplate - Outer	T2	1
69	M4×5 Flat Head Inner Hexagon Screw (Black)	M4×5	16
70	3141 Universal Pulley Frame Assembly	Assembly	2
71	Elastic Retaining Ring for 25 Shafts	φ25	2
72	3141 Inner Pulley Sheet Assembly	Assembly	1
73	φ75 Aluminum Alloy Pulley	φ75	6
74	M8×35 Chamfered Locking Screw	M8*35	2
75	M8×35 Chamfered Locking Screw Head	M8*35	2
76	M5×8 Inner Hexagon Cylindrical Head Screw	M5×8	2
77	φ17×97 - M10 Internal Thread Shaft	φ17*97	2
78	M5 Hexagon Nut (Black)	M5	2

PARTS LIST

NO.	Part Name	Specification	QTY
79	M8×14 Chamfered Locking Screw	M8*14	4
80	M8×14 Chamfered Locking Screw Head	M8*14	4
81	12 Pull Pin Shaft	φ18	2
82	3141 Rocker Arm Nameplate - Inner	T2	1
83	φ50 Aluminum Alloy Pulley	φ50	2
84	3141 Bird Spacer Sleeve	φ16	4
85	M8×60 Chamfered Locking Screw Head	M8*60	2
86	M8×60 Chamfered Locking Screw	M8*60	2
87	3141 Plastic Pad	φ15	8
88	6005 Deep Groove Ball Bearing	6005	4
89	6003 Deep Groove Ball Bearing - 14mm Width	6003	4
90	φ12×M20×40 Taper Head Positioning Pull Pin - Aluminum Alloy	Assembly	2
91	61900 Deep Groove Ball Bearing - 10mm Width	61900 Single - side Step 4mm	4
92	Elastic Retaining Ring for 22mm Hole	φ22	4
93	3141 Bird Slide Sleeve Assembly - Left	Assembly	1
94	3141 Pulley Rotating Assembly - Left	Assembly	1
95	3141 Rocker Arm Nameplate - Left Outer	T2	1
96	3141 Inner Pulley Sheet Assembly - Left	Assembly	1
97	3141 Rocker Arm Nameplate - Left Inner	T2	1
98	25×50 Square Pipe Inner Plug	□25×50×1.5	1
99	φ23×M10 Four - layer Spring Washer Nut	φ23 - M10 Four - layer	4
100	50 Square Pipe Inner Plug	□50×50×2	1
101	40×120 Square Pipe Inner Plug	□40×120×2	2
102	Tapered Buffer Pad	φ37×φ31×φ7×16	1
103	φ6 Flat Washer	φ6	1
104	M6×25 Inner Hexagon Flat Head Screw	M6×25	1
105	M12 Hexagon Nut	M12	1
106	3129 Stainless Steel Nameplate	T1	1
107	4×10 Oval Head Blind Rivet	4×10	4
108	3129 Foot Pedal Hook Liner Plate	T6	1
109	φ12×φ16×35 Single - end Open Plastic - Coated Sleeve	φ16×φ12×35	2
110	M6×12 Inner Hexagon Countersunk Head Screw	M6×12	2
111	Hexagon Rivet Nut	M6	1

TROUBLE SHOOTING

Weight stack top plate and guide rod assembly is floating/not resting on weight stack plate:

The cable tension needs adjusting. There are 2 adjustment places. Either adjust the pulley that goes into weight stack by screwing it in/out of the top plate or by choosing a different bolt hole on the floating pulley. Refer to Step 7.

The base unit is not square or the smith machine is not resting on both sides:

Loosen all nuts and bolts and then retighten from the bottom up.

What if my Smith Machine is not smooth or drags on one side:

Ensure the unit is level and square. Clean and/or lubricate guide rods. Ensure guide rods are not bent or received any damage.

The cables are not smooth on one or both sides:

Ensure cables are ONLY touching the pulley wheels. Be sure cable routing is correct so that it is not going over or under bolts or the frame.

Ensure pulley wheels are not overtightened, and each wheel is able to move freely. Add lubrication to the bearings if necessary.

WARRANTY INFO

For warranty information please contact the dealer nearest to you.

https://www.forceusa.com/locator



forceusa.com