FORCE1

WWW.FORCE1RC.COM

14+ AGES

UDI R/C®

# 2.4GHZ WIRELESS RC BOAT

# UDI001

## Instruction Manual

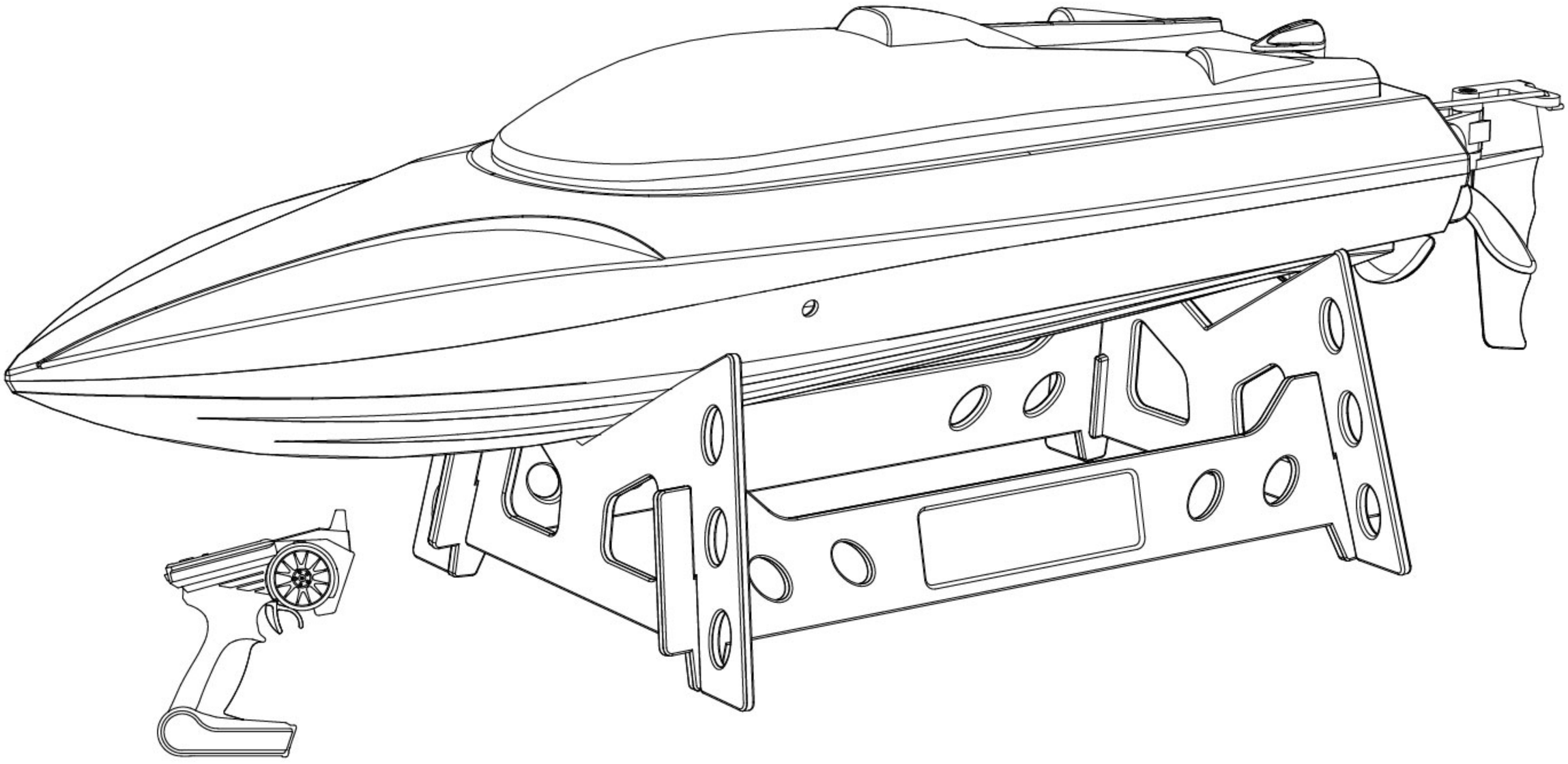

# Table of Contents:


Product Details and Functions.....3

Safety Warning and Tips.....3

Cleaning Instructions.....3

Maintenance and Repair.....3

RC Boat Parts Overview.....4

Battery Charging Instructions.....5

Transmitter Battery Installation.....5

RC Boat Battery Installation.....6

Automatic Pairing Instructions .....7

How to Operate RC Boat.....7-8

Spare Parts.....9

Technical Support.....10

# Product Details and Functions:

- The model contains a 370 magnetic motor driving system and advanced 2.4G automatic frequency pairing technology for longer distance control
- Equipped with Li-Ion battery
- Maximum speed: 20 km/h
- Boat dimensions: 342 x 89 x 88 mm
- Effective control distance: 120m. Do not exceed range or user may lose control
- Special anti-capsize function: Boat will turn over when capsized
- Motor cooling system: Extends life of the boat
- Built-in left and right navigation: Enhances the sailing stability
- Low batter alarm function: The transmitter will sound an alarm when batter is low. Important: Recall the boat within 1 minute of the alarm
- Weak signal alarm function: The transmitter light will flash to warn the user of weak 2.4G signal

# Safety Warning:

For the safety of others, the boat will only work when properly placed into the water.

- Do not use the boat in sea or salt water
- Never touch the rotating propeller
- This product is not suitable for ages under 14
- Never use a mix of old, new, or different types of batteries
- Never charge a non-rechargeable battery
- Do not immediately charge the battery after use. Wait for the battery to cool down before recharge
- To avoid injury, do not use boat when anyone is swimming close by
- Keep away from water plants to avoid propeller from getting tangled as this may cause damage to boat
- When the battery is low, the transmitter will sound an alarm and the boat will slow down. Important: when alarm goes off, the boat only has 1 minute of battery life. Recall boat within 1 minute
- Power off boat when not in use

# Cleaning Instructions:

Each time after use, use dry or soft cloth to wipe down the boat and absorb water.

# Maintenance and Repair:

1. When RC boat stops running, the battery must be removed
2. To avoid painted surfaces of the boat from getting damaged, avoid long exposure to the sun
3. If the RC boat is not use for a long time, disconnect the boat battery from the terminal and also remove the transmitter batteries to avoid leakage of the battery as this may damage the transmitter or boat

# RC Boat Parts Overview

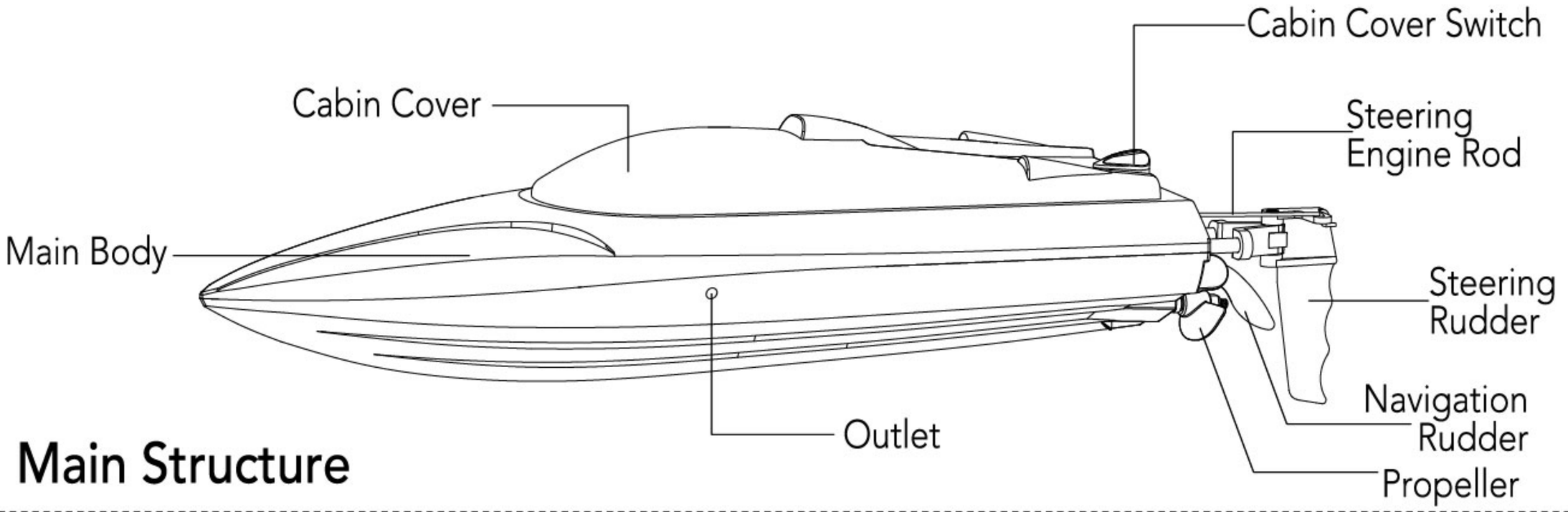


Main Structure

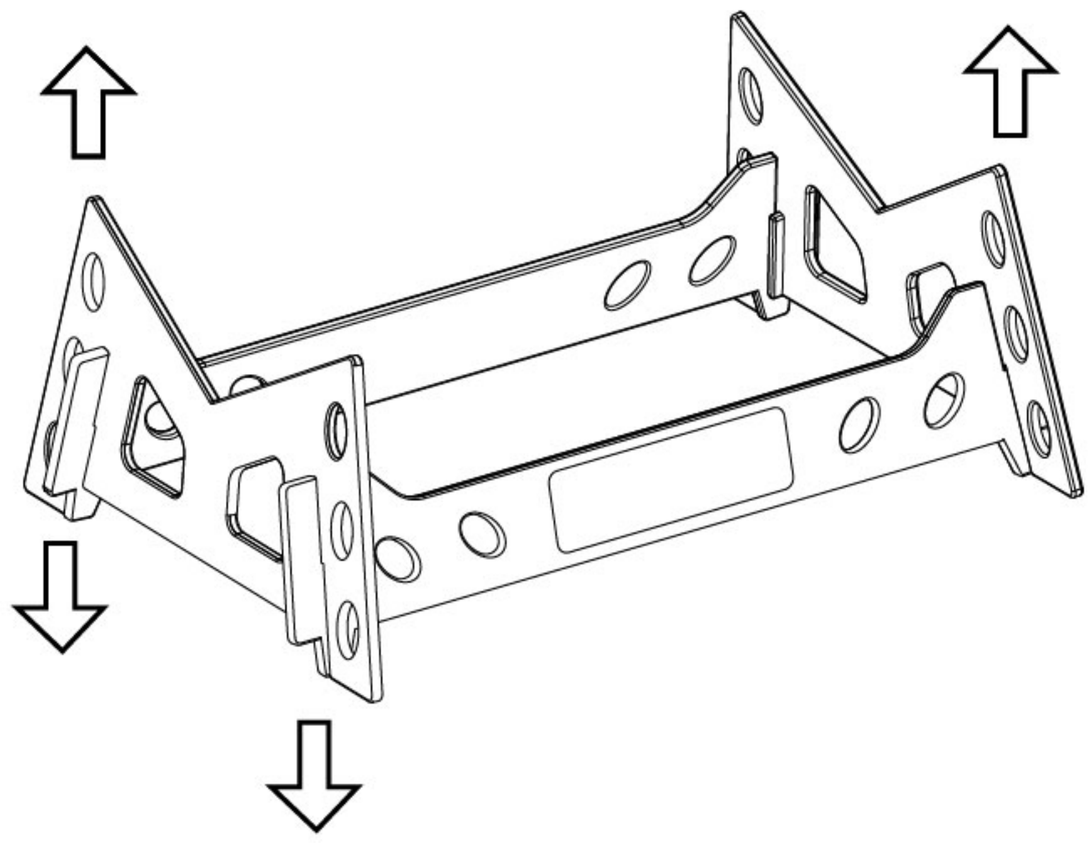

Display Stand

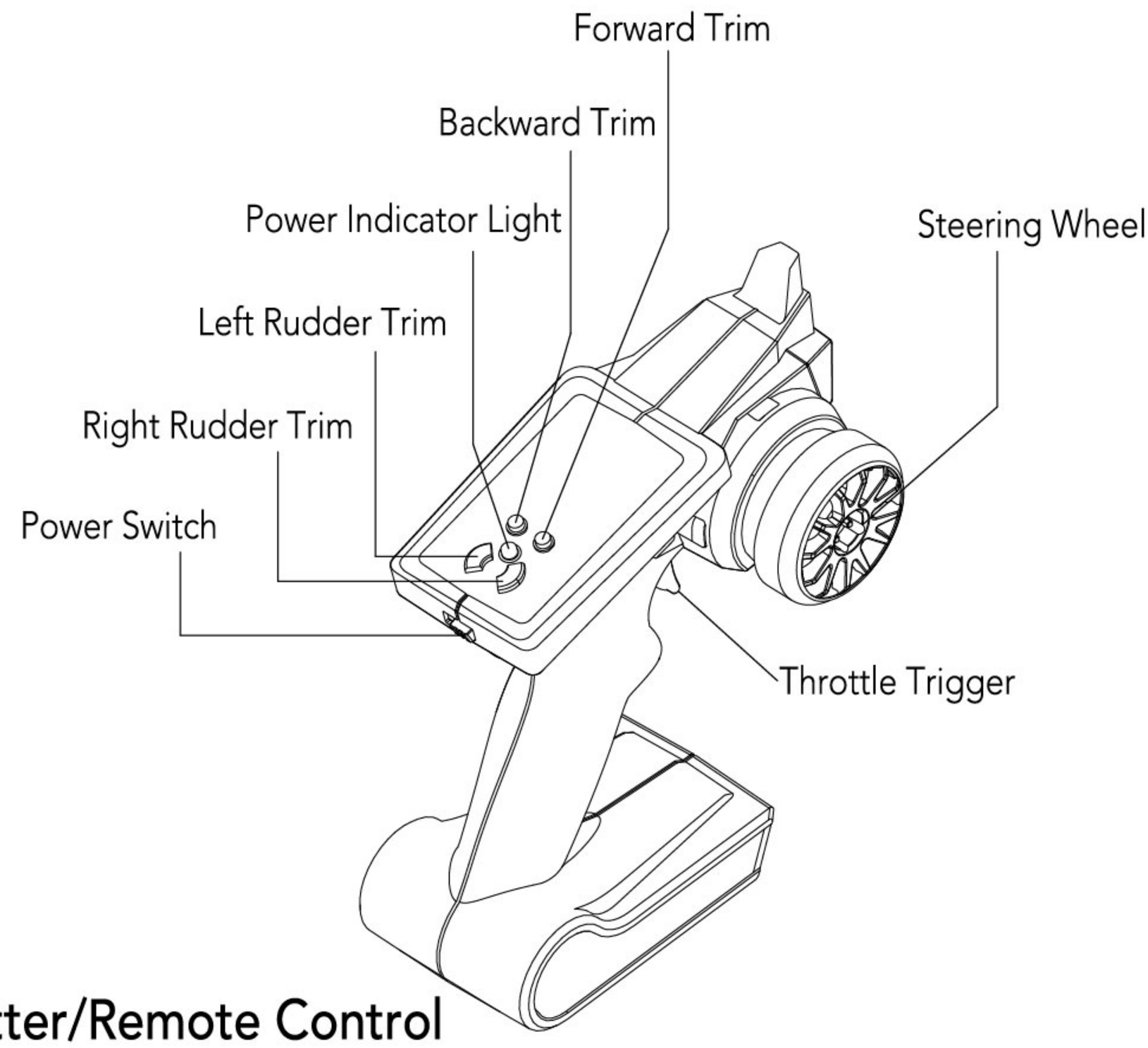


Transmitter/Remote Control

# Battery Charging Instructions

Connect the battery with the USB wire and then connect the USB to a computer. To indicate the battery is charging, the USB light wil turn red. It will turn green when the battery is fully charged. The charging time is about 90 minutes. Please disconnect the charging wire after the battery is fully charged

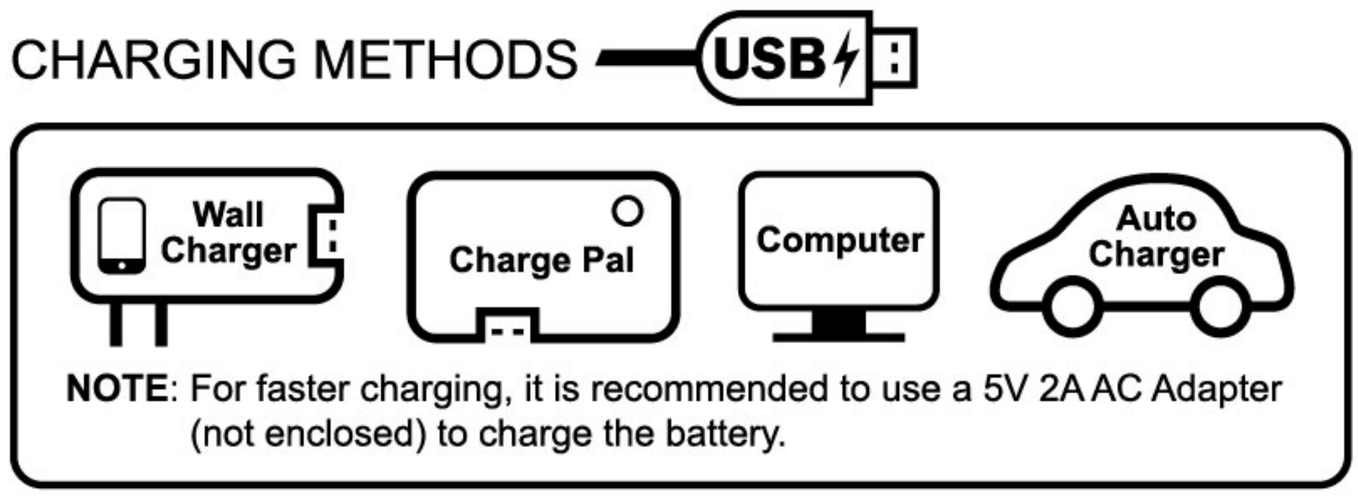


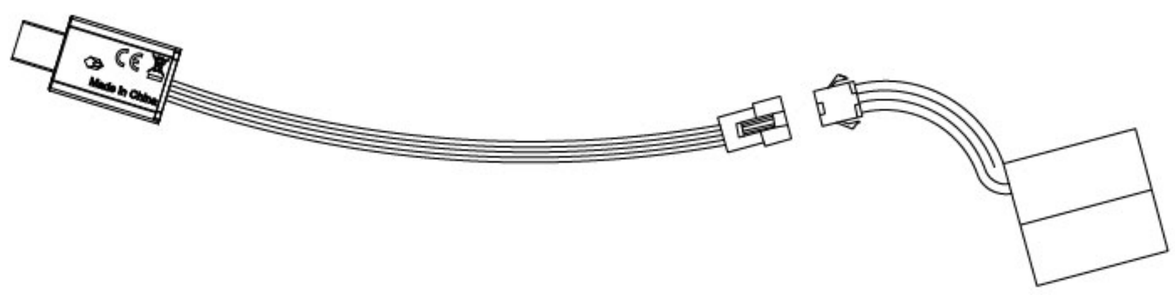


# Transmitter Battery Installation

Battery Installation: Open the battery cover of the transmitter. Install four 1.5V AA batteries in the battery box in accordance with the positive and negative pole indication. Close the battery box.

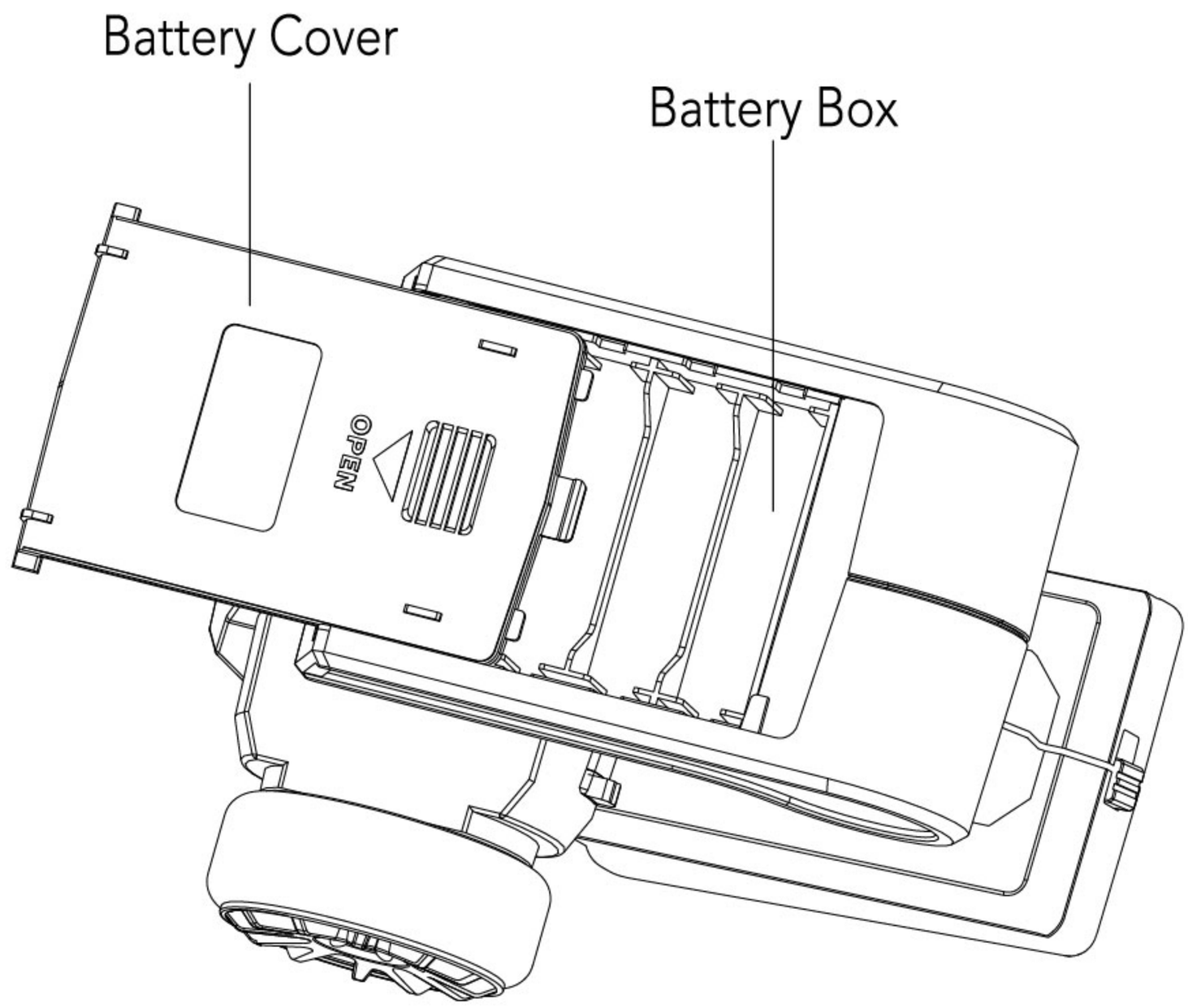

# RC Boat Battery Installation

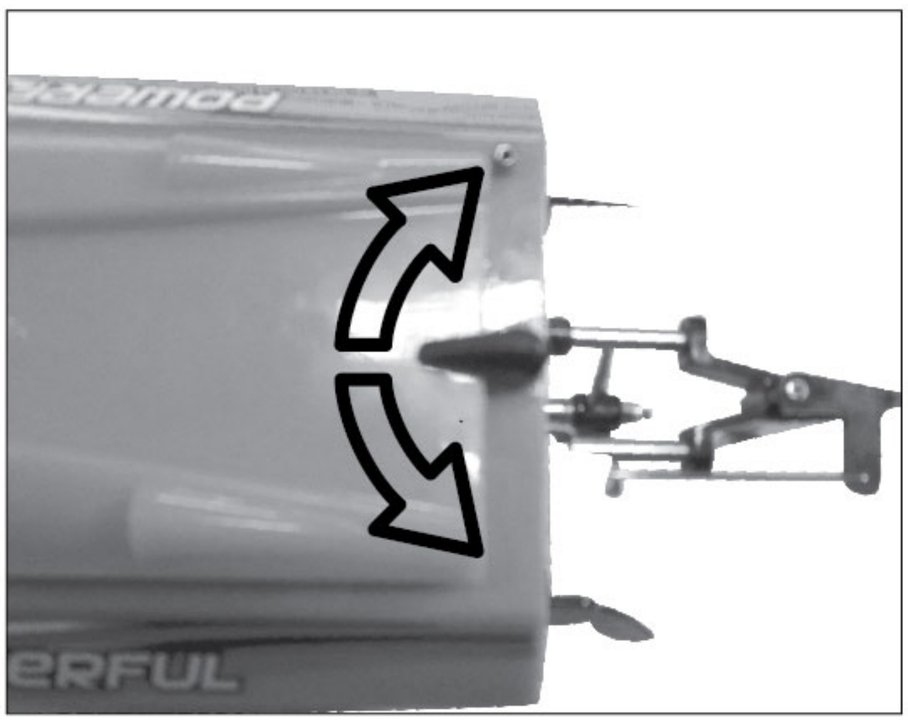

1. Twist the cabin cover switch left or right. Then lift upward to open the cabin cover

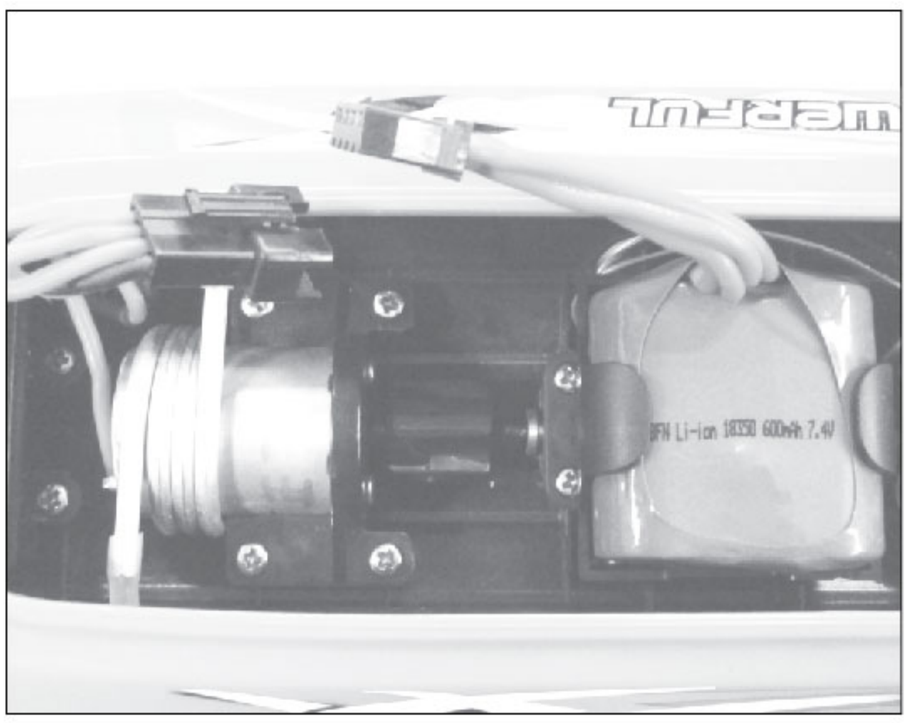

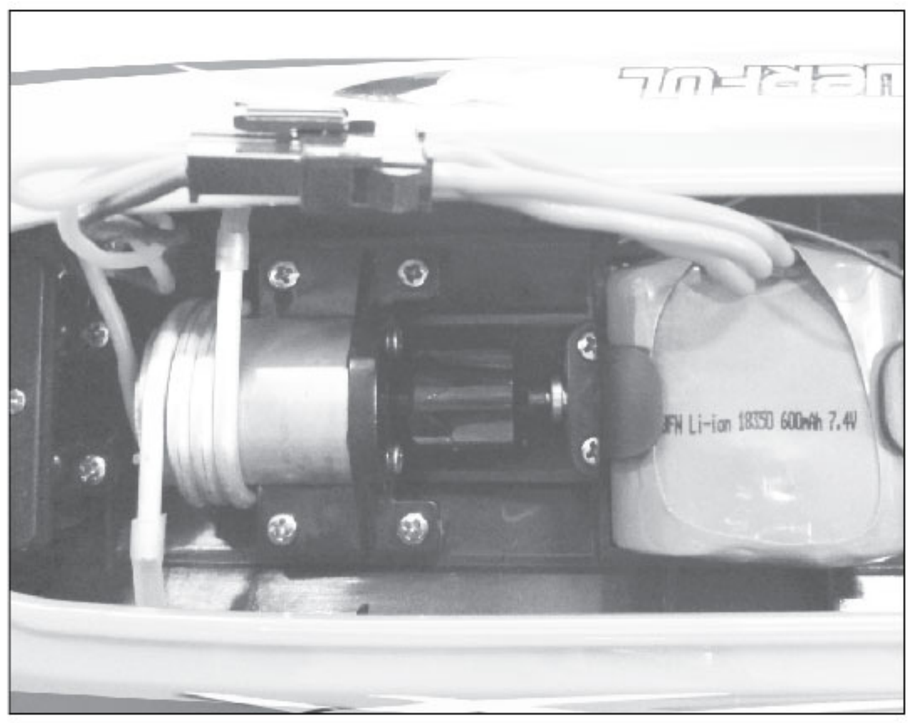

2. Put the Li-Ion battery into the battery box of the main body

3. Connect the battery to the power plug

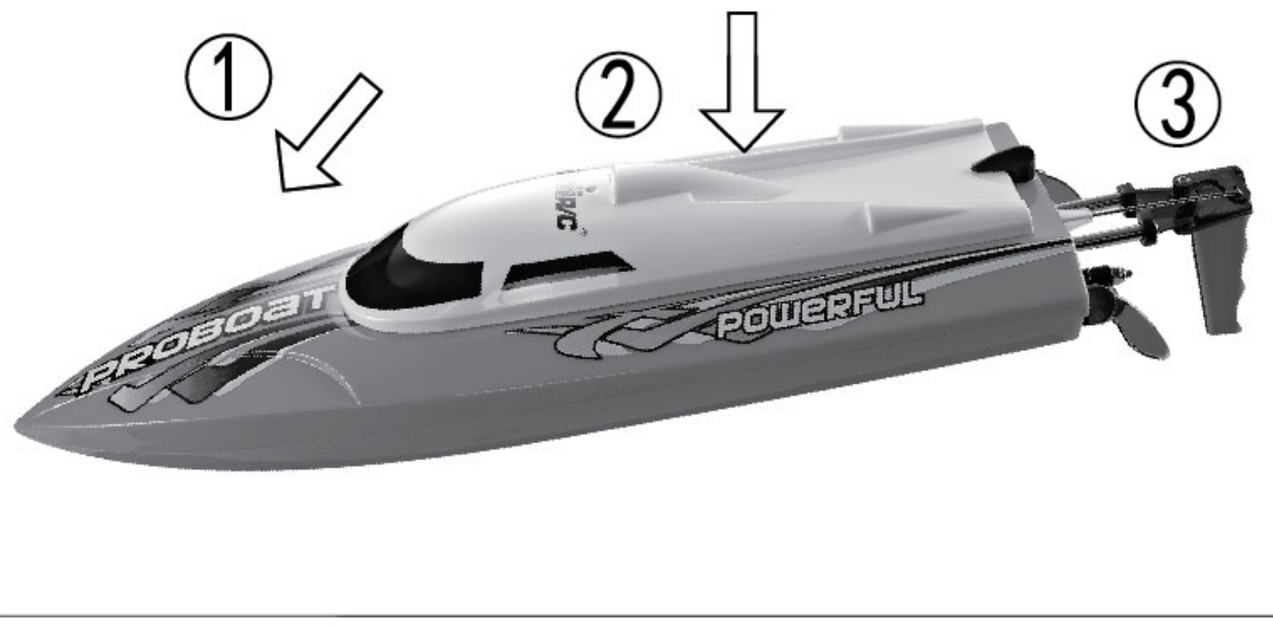


4. (1) Insert the cabin cover to the main body (2) Press upper cover.(3) Twist the cabin cover switch until the cabin cover is tightly in place.

Note: Make sure the battery wire is fully inside the boat to avoid getting stuck or cut off by the steering wheel.

# Automatic Pairing Instructions

Power on the transmitter. The transmitter's power indicator light will flash and make a short beeping sound. Put the boat into the water and the transmitter will make a longer beeping sound. The power indicator light will turn solid to indicate successful pairing. The boat is now ready to be operated.

# How to Operate RC Boat:

**To move forward:** Pull back the throttle trigger of the transmitter

Forward

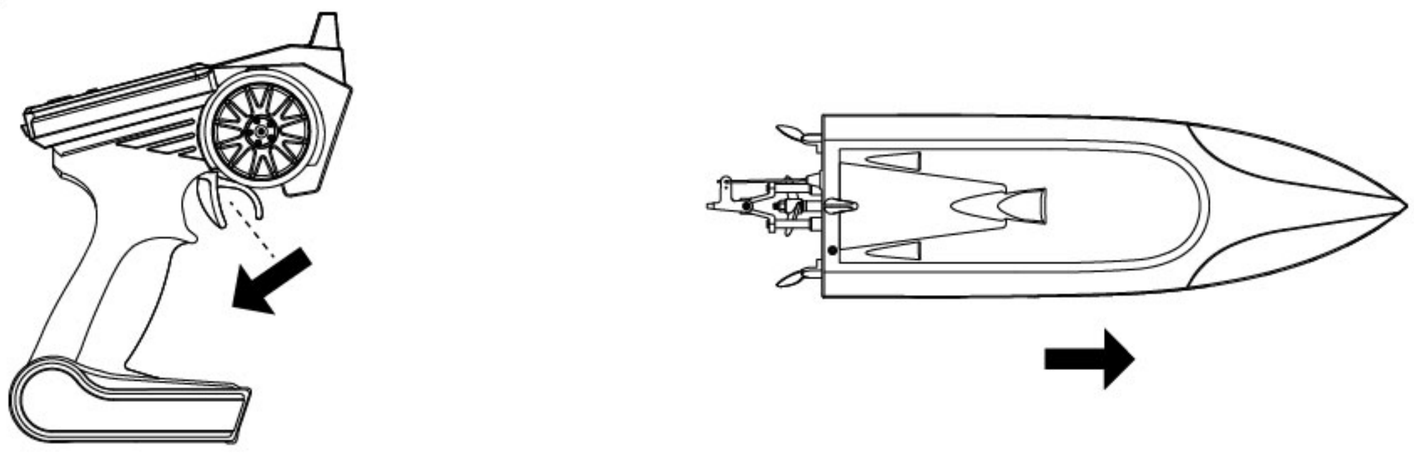

**To move backwards:** Push forward the throttle trigger of the transmitter

Backward

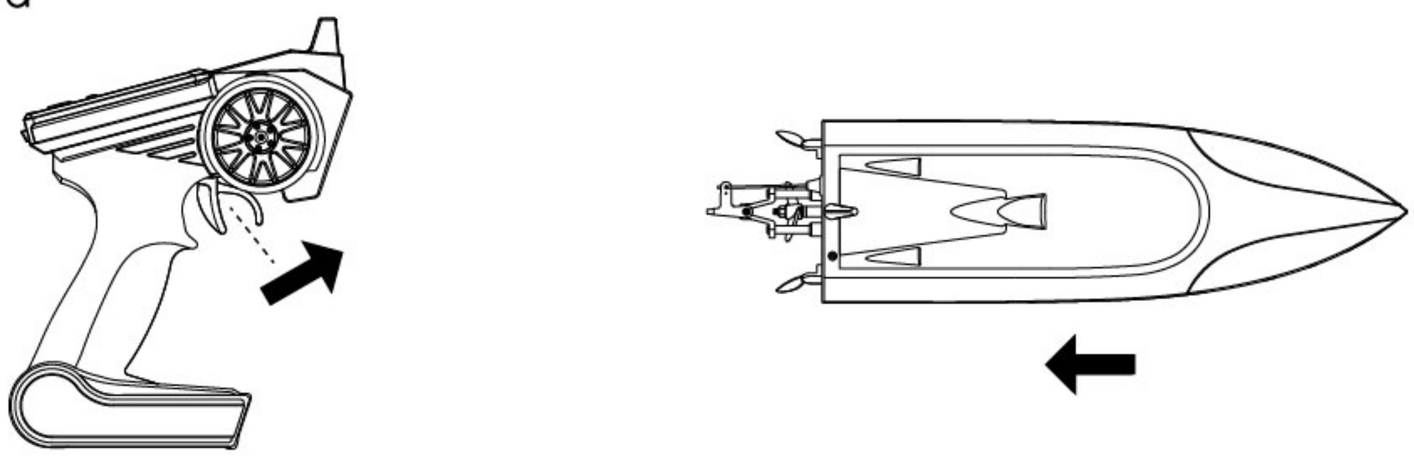

**To turn left:** Pull back the throttle trigger of the transmitter and move the steering wheel counterclockwise

Turn Left

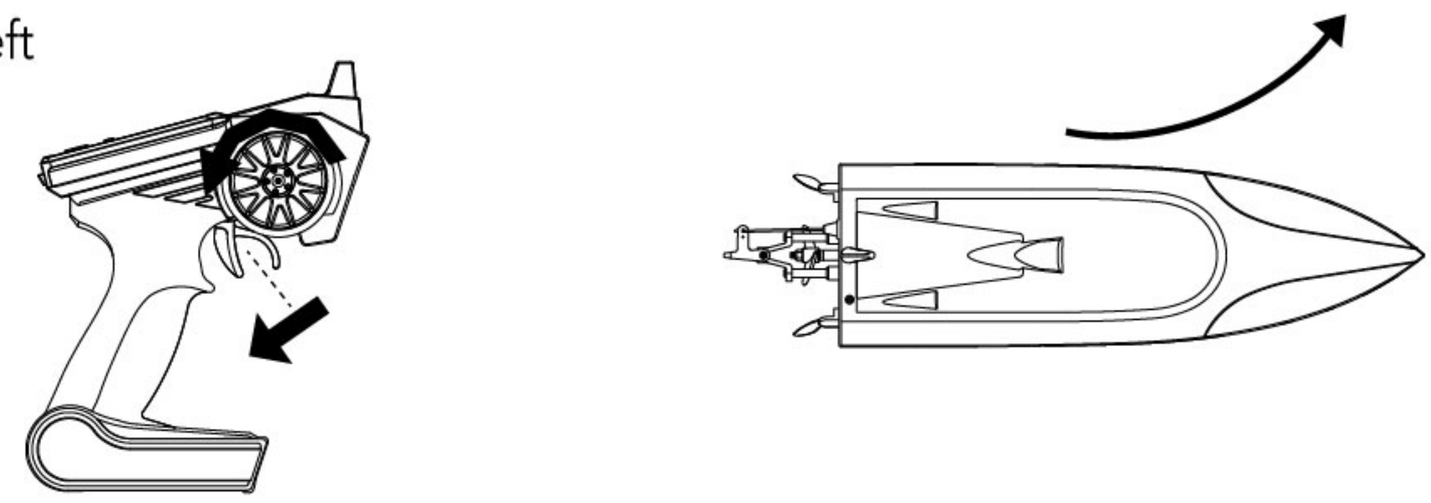

**To turn right:** Pull back the throttle trigger of the transmitter and move the steering wheel clockwise

Turn Right

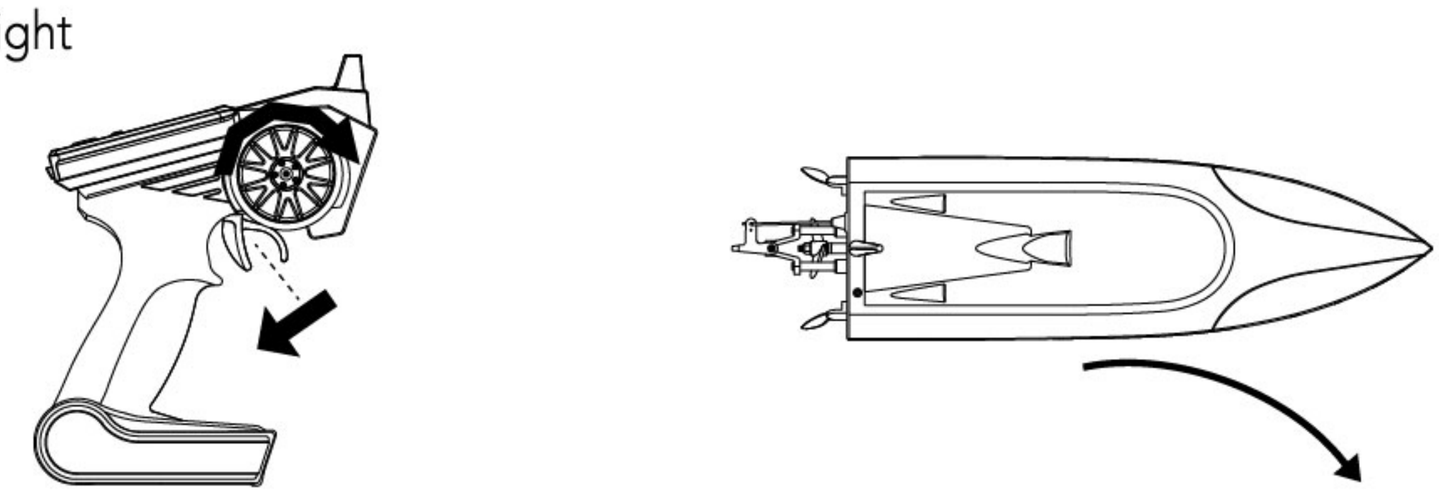

**If the boat capsizes:** Push forward the throttle trigger of the transmitter and then pull back at once. The boat will then return to normal.

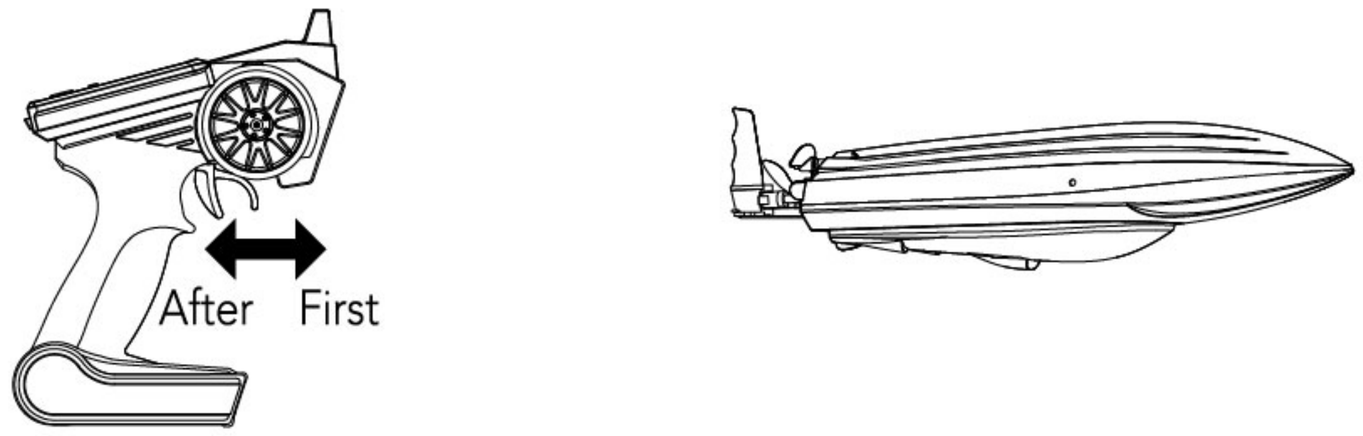


**If the boat drifts to the right:** Press the left rudder trim on the transmitter and the boat will gradually correct the rudder alignment. It will start moving straight.

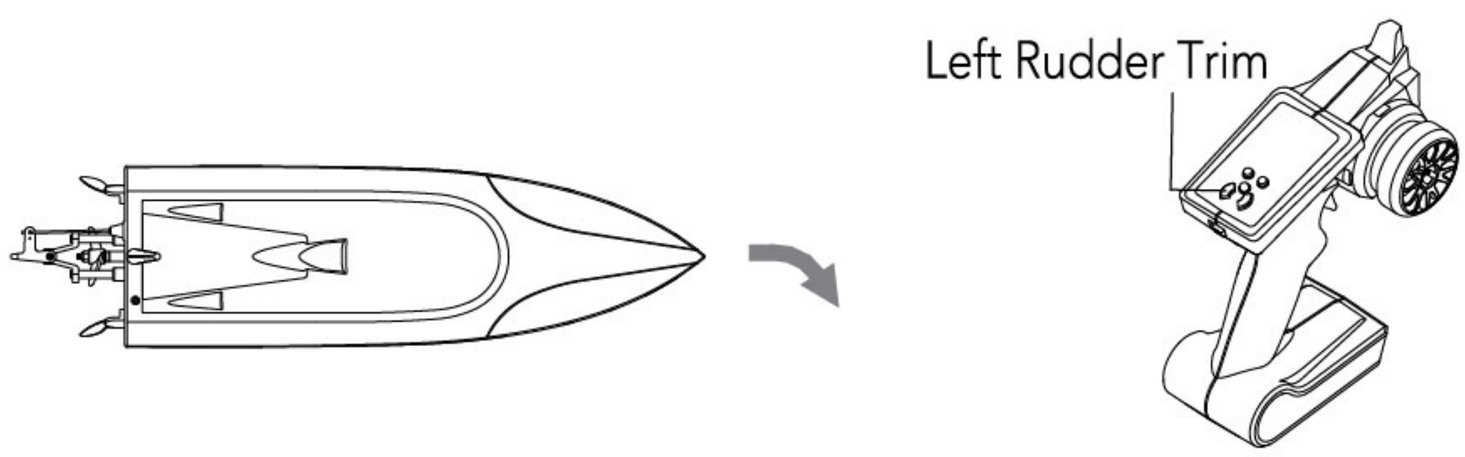


**If the boat drifts to the left:** Press the right rudder trim on the transmitter and the boat will gradually correct the rudder alignment. It will start moving straight.

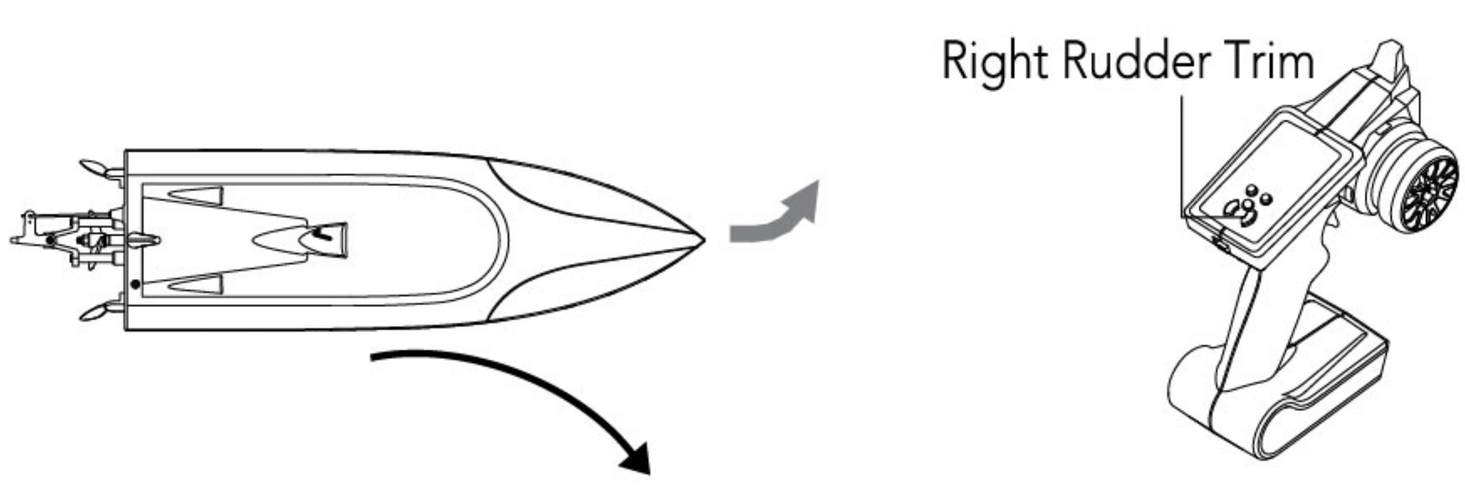


**If the boat still moves forward when the throttle trigger is in the middle position:**
Press backward trim until the boat stops going forward

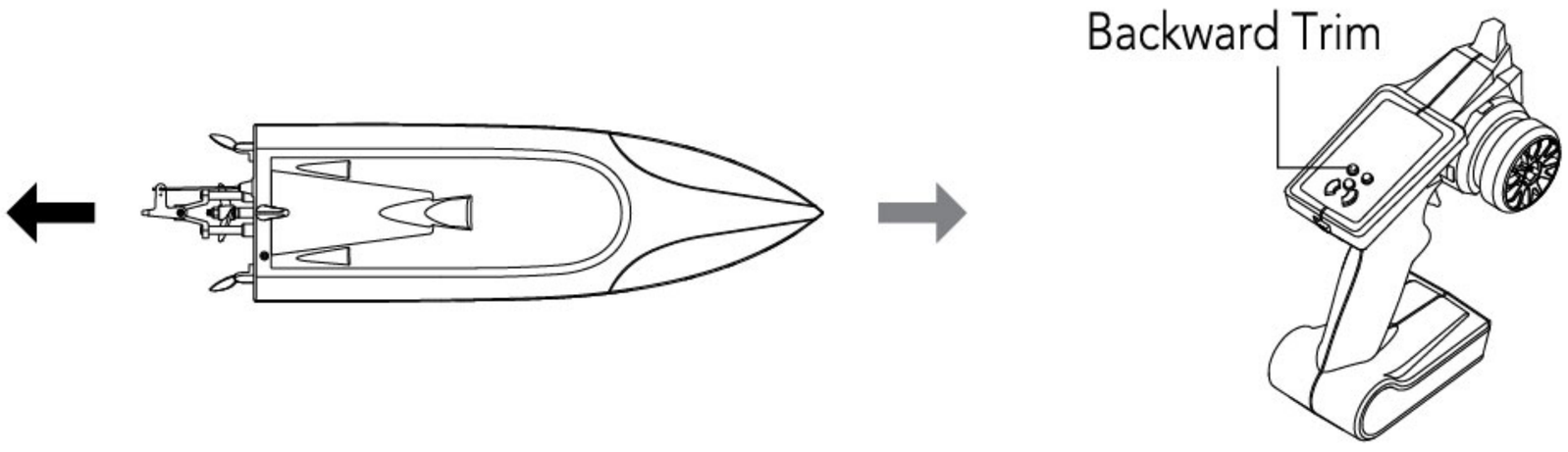


**If the boat still moves backwards when the throttle trigger is in the middle position:**
Press forward trim until the boat stops going backwards

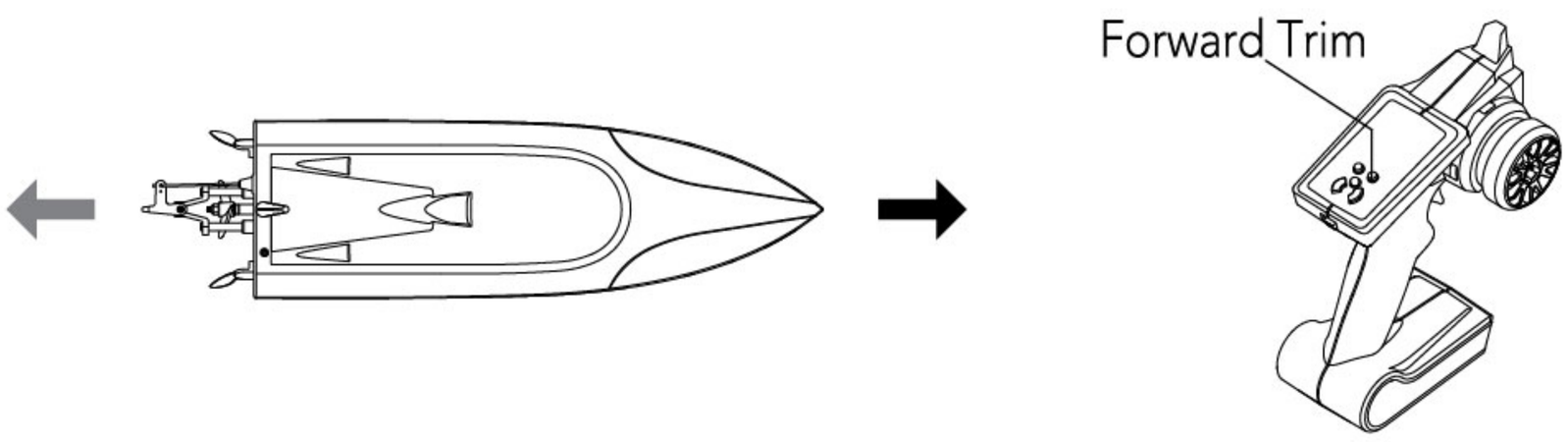

# Spare Parts

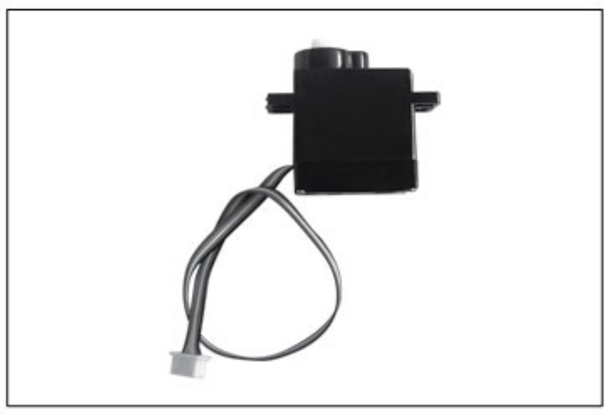

UDI001-01
Steering Engine



UDI001-02
Propeller



UDI001-03
Tail Rudder

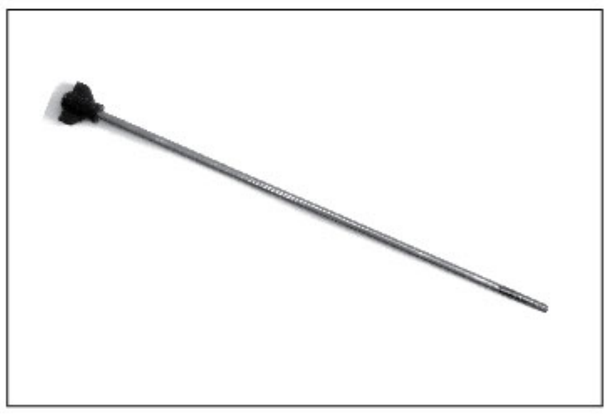

UDI001-04
Screw Rod



UDI001-05
Steel Pipe

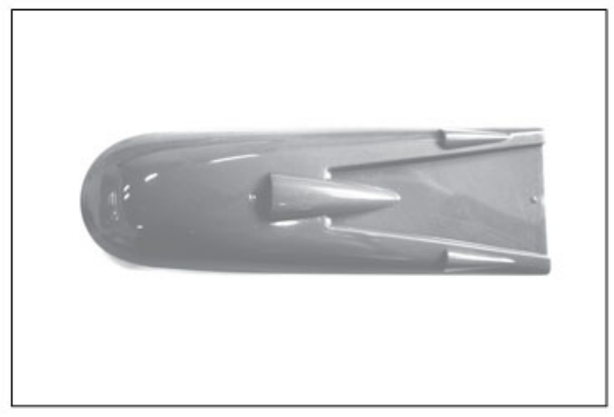

UDI001-06
Cabin Cover

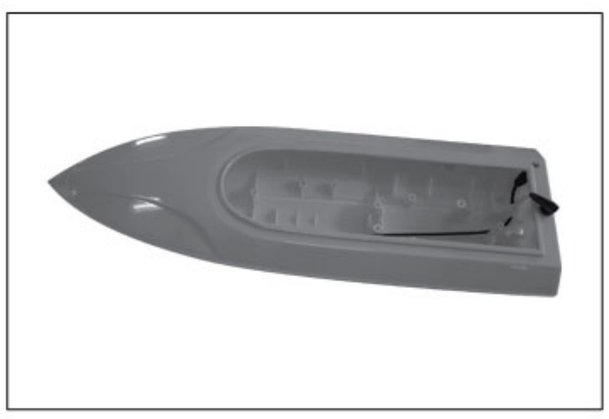

UDI001-07
Hull



UDI001-08
Li Battery

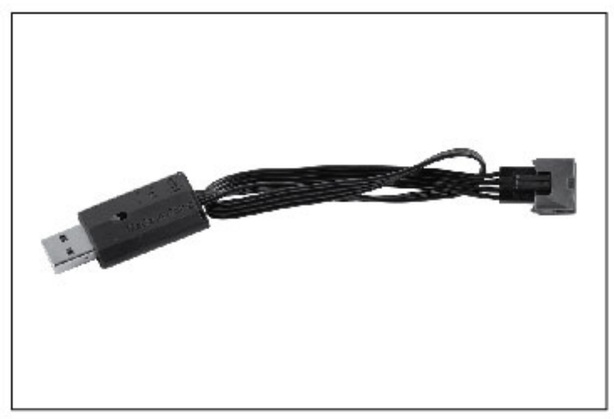

UDI001-09
**USB Wire**



UDI001-10
Circuit Board

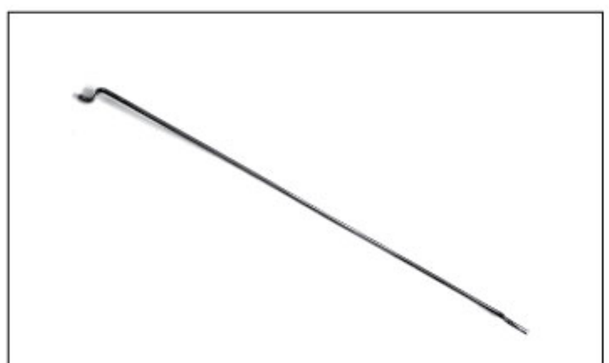

UDI001-11
Steering Engine Rod



UDI001-12
Support Holder



UDI001-13
Tail Rudder Compass Tube



UDI001-14
Silicone Waterproof Ring



UDI001-15
Cooling Pipe

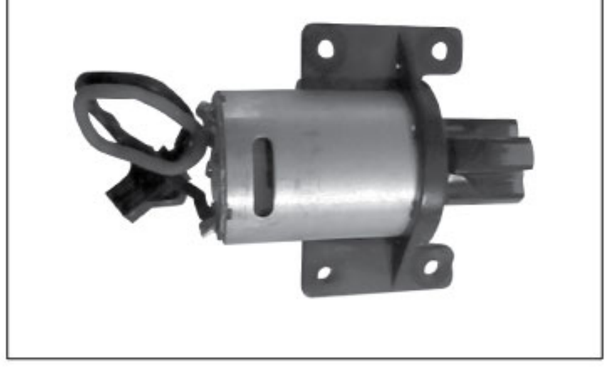

UDI001-16
Motor



UDI001-17
Navigation Rudder




UDI001-18
Transmitter

# Technical Support

For any questions or problems please contact us at:

support@force1rc.com

www.force1rc.com