# PPC TEST PORT CONNECTIONS KIT
INSTALLATION INSTRUCTIONS

FLUKE® Calibration

## INTERCONNECTIONS KIT, P/N 401460

- 1 401459 Quick connector on stand
- 1 101988-Z 1/8 in. stainless steel tubing (75 cm)
- 1 100319 1/8 in. swage x 1/8 in. NPT male adaptor
- 1 102116 Quick connector stem, 1/8 in. NPTF
- 1 102117 Quick connector stem, 1/4 in. NPTF
- 1 102184 Reducer, 1/4 in. swage x 1/8 in. swage

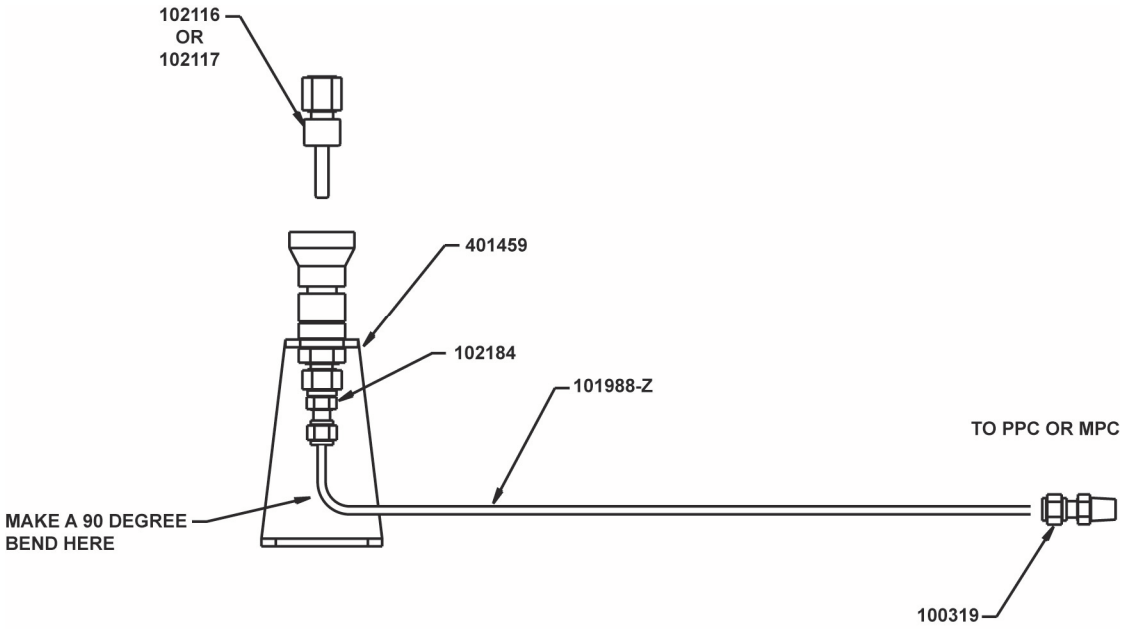


## TO CONNECT TO THE PPC

❶ Screw the 1/8 in. swage x 1/8 in. NPT male adaptor into the PPC test port using teflon tape as a seal.

❷ Install reducer into quick connector on stand.

❸ Position quick connector on stand on bench or other stable surface. (Mounting is optional, holes are provided.)

❹ To connect PPC test port to the quick connect stand cut 1/8 in. SS tubing to desired length, bend as needed including 90° angle under reducer.

*1/8 in. SS tubing can be bent by hand to desired shape but use caution not to kink the tube.*

❺ Swage the 1/8 in. SS tube to adaptor on PPC and to reducer on quick connect stand.

PN 3152507
April 2014
© 2014 Fluke Corporation. All rights reserved. Specifications are subject to change without notice.
All product names are trademarks of their respective companies.