Calibration Solutions for Pressure and Flow™

PPC™ Rack Mount Kit

P/N 400440

Installation Instructions

RACK MOUNT KIT, P/N 400440, INCLUDES

QTY	PART NO	FIGURE CALLOUT	DESCRIPTION
1	123698	1	Front panel
2	123700	2	Side bracket
10	100972-Z	3	M4 hex nut
10	102668-Z	4	M4 split lock washer
10	100918-Z	5	M4 flat washer
1	123702	6	Rear support bracket
1	123765	7	Foam gasket

INSTALLATION INSTRUCTIONS

❶ Place one side bracket (2) on each side of the PPC™. Position each bracket with the front panel attachment flange (flange with three holes) facing the front of the PPC.

❷ Attach the front panel (1) to the side brackets (2) using six M4 flat washers (5), six M4 split lock washers (4) and six M4 hex nuts (3). Recommended torque is 3 Nm.

❸ Remove adhesive backing from foam strip (7). Adhere the foam strip to the rear support bracket (6), centering the foam as shown in figure 2.

❹ Attach the rear support bracket (6) to the side brackets (2) using four M4 flat washers (5), four M4 split lock washers (4) and four M4 hex nuts (3). Recommended torque is 3 Nm.

❺ For adequate support of the PPC, the rear support bracket (6) shall be supported on the side rails of the rack system or by other means.

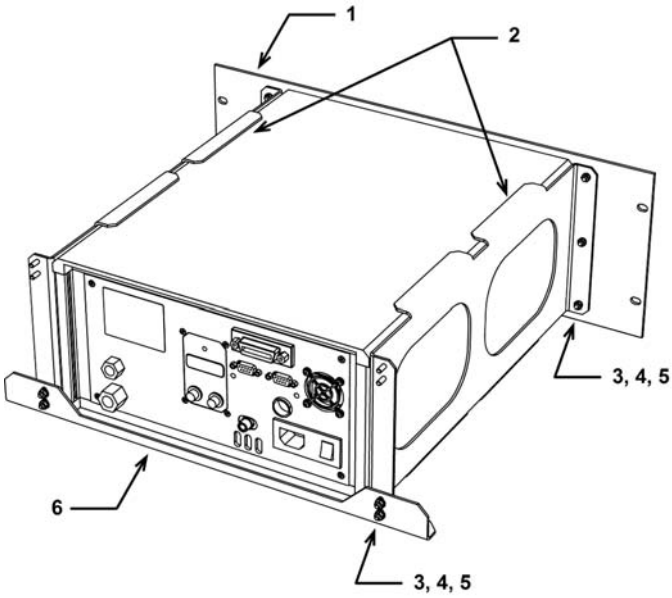

Figure 1 Rack Mount Kit

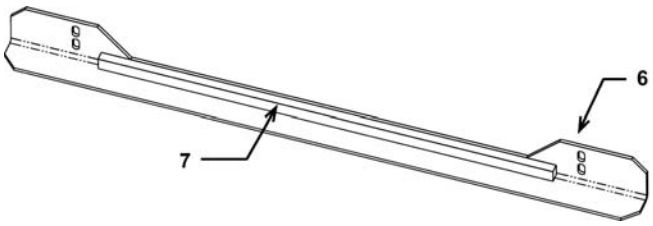

Figure 2 Rear Support Bracket and Foam

PPC is a trademark, registered and otherwise, of **DH Instruments, Inc.**

DH Instruments, Inc.
4765 East Beautiful Lane
Phoenix AZ 85044-5318
USA

Tel 602.431.9100
Fax 602.431.9559
dhi@dhinstruments.com
www.dhinstruments.com