Interconnect Kit
PG7600™ to Vacuum Pump

P/N 402391

INSTALLATION INSTRUCTIONS

INTERCONNECT KIT FOR PG7600™ TO VACUUM PUMP, P/N 402391, INCLUDES:

DESCRIPTION	QTY	PART NO
Centering ring, KF25	1	101542
Clamp, KF25	1	102121
Valve, vacuum shutoff , KF25	1	102763
Vacuum hose, KF25, 48 in (PVC)	1	103737
Instruction sheet	1	560085

INTRODUCTION

This kit provides the materials necessary to connect the PG7600 piston gauge reference vacuum port to a vacuum pump equipped with a KF25 intake port. Vacuum pump is sold separately.

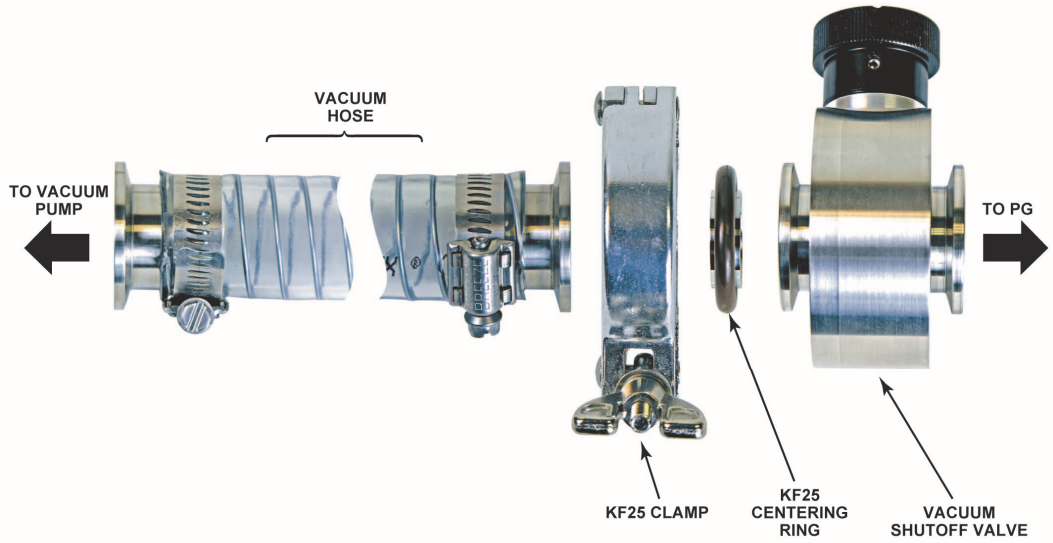

GENERAL INSTALLATION

❶ **Connect the vacuum shutoff valve to the PG7600 platform.** Remove the KF25 vacuum clamp, centering ring and plug from the PG7600 platform's KF25 vacuum connection. Use the KF25 clamp and centering ring to install the valve onto the platform's vacuum port. Orient the valve so that it can be operated conveniently.

❷ **Connect the 48 in. vacuum hose to the vacuum shutoff valve.** Use the KF25 clamp and centering ring provided in this kit to connect the hose to the vacuum shutoff valve.

❸ **Connect the 48 in. vacuum hose to the vacuum pump.** Remove the vacuum clamp, centering ring and plastic cover from the vacuum pump inlet port. Leave the protective screen in place. Use the clamp and centering ring to attach the 48 in. vacuum hose to the vacuum pump.

An adaptor will be required if the vacuum pump intake port is not configured with a KF25 flange.

PG7600 is a trademark, registered and otherwise, of **DH Instruments, a Fluke Company**

PN 3152870
April 2014
© 2014 Fluke Corporation. All rights reserved. Specifications are subject to change without notice.
All product names are trademarks of their respective companies.