Installation and Use of Vacuum Pump Downstream Interconnect Kit for molbloc-S®

P/N 401882

INSTALLATION INSTRUCTIONS

FLUKE® Calibration

The use of a vacuum pump, connected downstream of the molbloc-S®, increases the usable flow range of each element. The purpose of this kit is to provide the plumbing components required for the typical installation of the molbloc-S system with the medium flow vacuum pump, part number 401940 and 401883. This instruction sheet is a guide to the recommended plumbing interconnection between the molbloc-S test system and the vacuum pump.

MOLBOX OVER-PRESSURE PROTECTION

Since the pressure in the test setup is directly connected to the molbox, care must be taken to not exceed the maximum operating pressure rating of the Reference Pressure Transducers (RPTs) within the molbox.

The check valve included in this interconnection kit is provided to prevent damage to the molbox and/or the vacuum pump. In the event the pump looses power or the user leaves the vacuum shut-off valve closed during a calibration, this check valve will allow gas flow to vent out of the system while keeping line pressure below a damaging level.

The plumbing connected to the outlet of the check valve is not included in this kit and is therefore the responsibility of the installer. This plumbing should be keep as short as possible and its diameter as large as practical in order to minimize the restriction to the venting gas flow. This will limit additional line pressure build-up in the molbloc-S plumbing system.

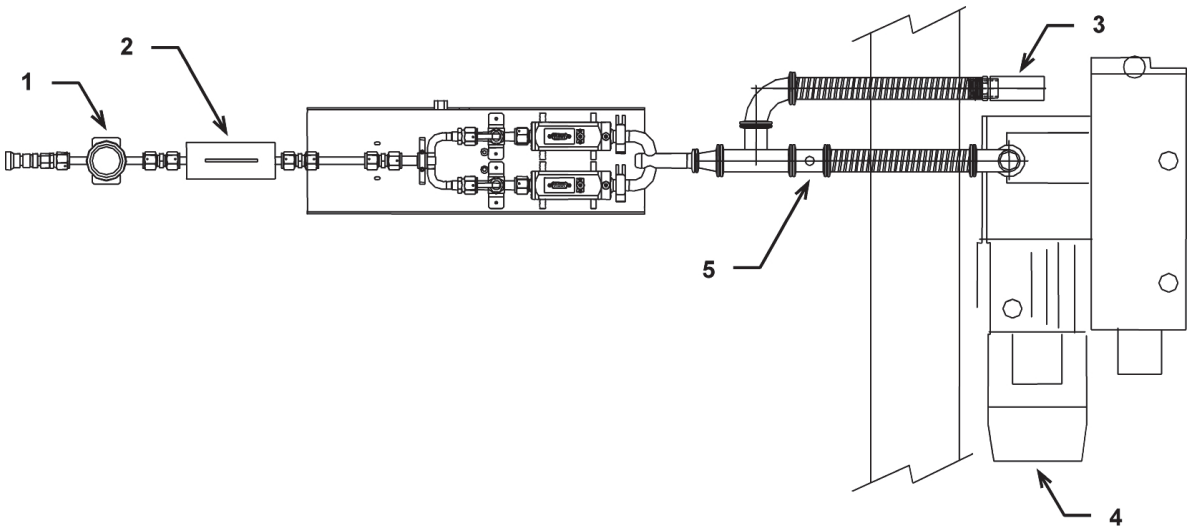

molbloc-S Test Layout
Top View

1. Inlet Supply Regulator
2. Device Under Test
3. Check Valve
4. Medium-Flow Vacuum Pump (Installed Outside of Lab Space)
5. Vacuum Shut-Off Valve

When performing a leak test of a plumbing system that contains the ISO-KF Style Vacuum Flanges, do not exceed the maximum operating pressure of the molbox, 600 kPa (87 psia) for molbox A700K models, 200 kPa (30 psia) for molbox A350K models.

PN 3152673
April 2014
© 2014 Fluke Corporation. All rights reserved. Specifications are subject to change without notice.
All product names are trademarks of their respective companies.

INSTALLATION OF MEDIUM VACUUM PUMP DOWNSTREAM INTERCONNECT KIT

The above figure shows the basic interconnection plumbing when using the Medium Flow Vacuum Pump with the molbloc-S. This kit includes 2 conical reducers with the ISO-KF Style Vacuum Flange ends. When connecting a single molbloc-S to the vacuum pump, use both the 40 mm x 25 mm, and the 25 mm x 16 mm conical reducers. When utilizing the downstream tee assembly (**DHI** P\N 401884) only the 40 mm x 25 mm conical reducer is required.

For the sake of flexibility this interconnection kit includes a coil of 1 1/2 in. wire reinforced PVC hose. This hose can be cut to the precise length required in each application. Hose barb fittings slip inside the hose and are secured by worm drive clamps.

VACUUM SHUT-OFF VALVE

The vacuum shut-off valve is provided so that the operator can continue to run the vacuum pump while changing the Device Under Test (DUT) or the molbloc-S between calibration runs. It is not recommended to start and stop the pump more than a few times per day. Therefore continue to run the pump with the gas ballast valve open and the vacuum shut-off valve closed. Power consumption is minimal when the pump is running at its ultimate pressure.

CONNECTING, DISCONNECTING AND MOUNTING MOLBLOC-S WITH ISO-KF STYLE VACUUM FLANGES (MOLBLOC-S OUTLET FITTING)

ISO-KF Style Vacuum Flange Fittings

The outlet connection system on the molbloc-S body is the ISO-KF style vacuum flange. It utilizes an internal centering ring, overpressure ring, and an external clamp. The seal is effected by the uniform application of pressure by the clamp on the 15° surface of the mating stainless steel flanges. These mating flange surfaces compress a Viton® O-ring that is held in place by the centering ring. The overpressure ring keeps the O-ring in place, and maintains a leak free connection when the system is subjected to internal pressures above vacuum level. This connection is reusable, rotatable, and can operate leak free in vacuum applications up to 10^{-8} Torr. When an overpressure ring is used, KF25 or smaller flange connections can operate

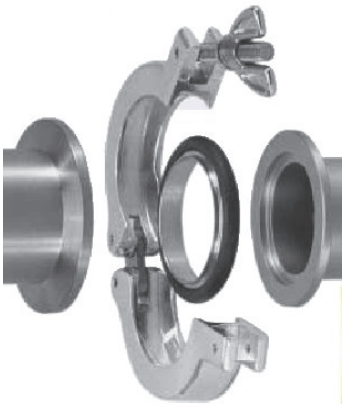

leak free to positive pressure beyond 600 kPa (87 psia)

Making and Breaking Procedure for ISO-KF Style Vacuum Flange Connections

❶ Place the centering ring (and overpressure ring if applicable) into the groove of one of the ISO-KF flanges to be mated.

❷ Align the mating flange, and close the gap by hand. Hold the flanges together while putting the clamp around them.

❸ Swing the clamp closed. If necessary loosen the wing nut to allow the thrust washer and wing nut to fall into position on top of the clamp. Fully tighten the wing nut by hand.

❹ To break the fitting, hold one of the plumbing sections with your hand and loosen the wing nut until the clamp can be separated. Remove the clamp, centering ring, (and overpressure ring if applicable).