Operation of Adjustable DUT Stand for molbloc-S®

P/N 401934

INSTRUCTION SHEET

FLUKE® Calibration

The types and sizes of Devices Under Test (DUTs) that can be calibrated using the molbloc/molbox™ Mass Flow Calibration System in conjunction with the molbloc-S numbers literally in the hundreds. Since there is no standardized dimension for the DUT's plumbing centerline to its base, the molstic-S was not designed to accommodate the DUT directly on its platform. The use of the Adjustable DUT Stand for molbloc-S facilitates the alignment of the centerline of the DUT's inlet or outlet plumbing connection with that of the molstic-S.

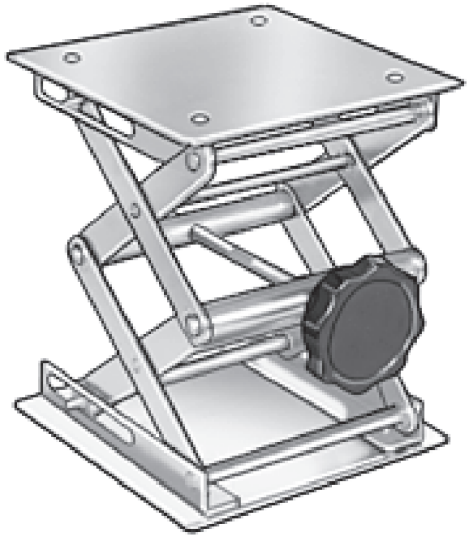

ADJUSTING THE HEIGHT OF THE DUT STAND

❶ Place the DUT onto the platform of the DUT Stand.

❷ Estimate the change in platform height required to match the centerline of the DUT with the centerline of the molstic-S plumbing.

❸ Remove the DUT from the DUT stand.

❹ In order to raise the height of the DUT Stand platform, turn the adjustment knob clockwise.

❺ In order to lower the height of the DUT Stand platform, turn the adjustment knob counterclockwise.

❻ Replace the DUT onto the DUT stand platform; readjust height as required.

❼ Make plumbing connections.

Do not adjust the height of the stand with the load on the platform. Place the Device Under Test on the stand only after adjustment is complete.

DUT STAND SPECIFICATIONS

Maximum Load:	8 kg (18 lb)
Adjustable Height:	5 to 12 cm (2 to 4.75 in)
Platform Size:	7.6 cm x 7.6 cm (3 in. x 3 in.)

PN 3152725
April 2014
© 2014 Fluke Corporation. All rights reserved. Specifications are subject to change without notice.
All product names are trademarks of their respective companies.