Installation and Use of Low-Flow Vacuum Pump Kit for molbloc-S®

P/N 401982

INSTRUCTION SHEET

FLUKE® Calibration

The use of a vacuum pump, connected downstream of the molbloc-S®, increases the usable flow range of each element. The installation and operation of the vacuum should be in accordance with all applicable local electrical, plumbing, building, and safety codes. This instruction sheet is a guide to the application of the vacuum system and use with the molbloc-S and molbox mass flow calibration system. Please follow the recommendations and installation information provided in the pump's operation manual published by its manufacturer and provided with the pump.

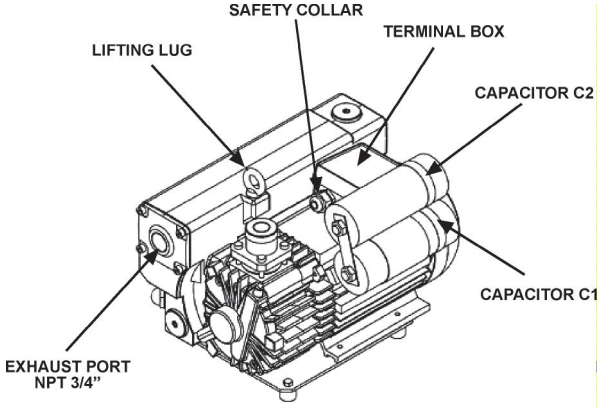

Figure 1: Vacuum Pump

WIRING THE LEYBOLD SV25B VACUUM PUMP

The power cord included in this kit, P/N 103486, is a three-conductor plastic original equipment cord, rated at 1875 Watts, 15A-125V. The conductor colors are blue, brown, and green with yellow stripe.

1. Refer to Figure 1. Locate the terminal box on the top of the pump, and remove the two screws that hold the cover in place.

2. Remove the cover to expose the terminal block.

3. Unscrew the safety collar and insert the cord through the safety collar and into the terminal box.

4. Refer to Figure 2. Locate terminal one and attach the blue wire (neutral) to it. Locate terminal two and attach the brown wire (line) to it. Locate the earth ground terminal off to the side in the terminal box and attach the green with yellow stripe wire (earth ground) to it.

5. Tighten the safety collar until the power cord is captured and cannot be pulled from the terminal box.

6. Replace the cover and re-install the two screws to secure it.

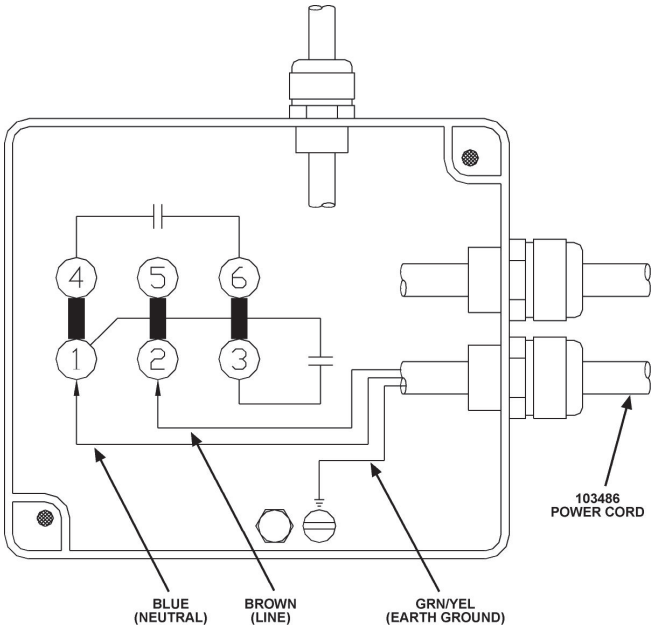

Figure 2: Wiring the Leybold SV25B Vacuum Pump

VACUUM PUMP INSTALLATION, GENERAL CONSIDERATIONS

- The vacuum pump should be located in a place where there is adequate ventilation for cooling. Consideration of the noise and heat generated by the pump should be made. It might be desirable to install the pump in a location outside of the laboratory in which the molbloc/molbox system is operating.

- Caution should be exercised when calibrating in gases other than air. Asphyxiation of personnel within a confined space into which the pump exhausts is a real threat when calibrating at high flow rates. Venting of the exhaust gas stream outdoors or into a large ventilated space is recommended.

PN 3152769
April 2014
© 2014 Fluke Corporation. All rights reserved. Specifications are subject to change without notice.
All product names are trademarks of their respective companies.

- In order to minimize the back-pressure applied to the exhaust of the pump, plumbing should be as short and as large in diameter as is practical, but no smaller than the pump's exhaust fitting size. Inlet plumbing length and diameter should follow the same guidelines in order to maximize the efficiency of the vacuum pump. Restrictions in the inlet plumbing will reduce the pumping speed of the pump.

- In cyclic operations, such as flow meter calibrations with molbloc-S, the pump should not be switched off during cycles. Continue to run the pump with the gas ballast valve open and the inlet port closed. Power consumption is minimal when the pump is operating at its ultimate pressure. Limit starting the pump to no more than 5 or 6 times per hour.

DIMENSIONAL DATA, MM (IN)

Ø INLET NPT	Ø EXHAUST NPT	AMAX	WMAX	HMAX	X	Y
3/4 in.	3/4 in.	356 (14.0)	275 (10.8)	255 (10.0)	280 (11.0)	100 (3.9)

TECHNICAL DATA

Pumping Speed	25 cu m/hr, (14.7 cfm)
Average Noise Level	64 dB(A) (free field measurement at 1 m)
Main Voltage	110/115 (± 10 %) Volts AC (60 Hz), 1-Phase Supply
Motor Power	0.75 kW, (1.0 hp)
Nominal Speed	3 600 rpm
Weight w/Oil	27 kg, (59.6 lb)
Oil Capacity	0.5 l, (0.53 qt)
Inlet/Outlet Connection	3/4 in. female NPT

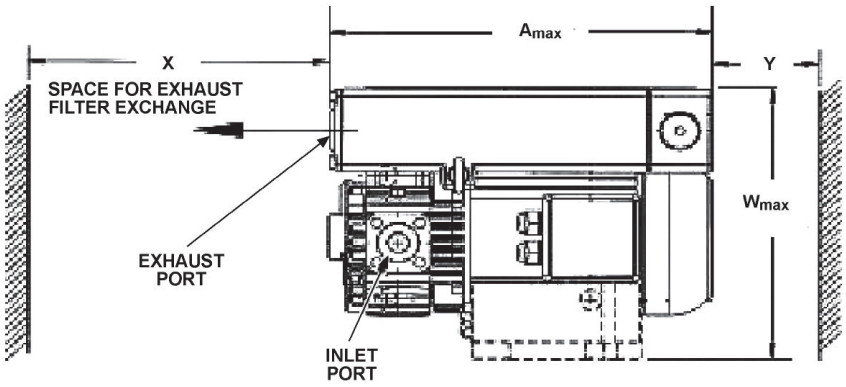

TOP VIEW

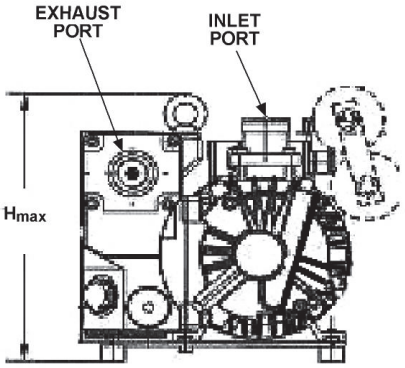

SIDE VIEW

Please read and understand the enclosed installation and operation manual, material safety data sheet and all other enclosed data. Personal injury and/or property damage could result if this equipment is not installed and operated properly. This system should be assembled and operated only by personnel who have been instructed in proper safety practices.