Installation and Use of Medium-Flow Vacuum Pump Kit for molbloc-S®

P/N 401940 & 401883

INSTALLATION INSTRUCTIONS

FLUKE® Calibration

The use of a vacuum pump, connected downstream of the molbloc-S, increases the usable flow range of each element. The installation and operation of the vacuum should be in accordance with all applicable local electrical, plumbing, building, and safety codes. This instruction sheet is a guide to the application of the vacuum system and use with the molbloc-S and molbox Mass Flow Calibration System. Please follow the recommendations and installation information provided in the Pump's Operation manual published by its manufacturer and provided with the pump.

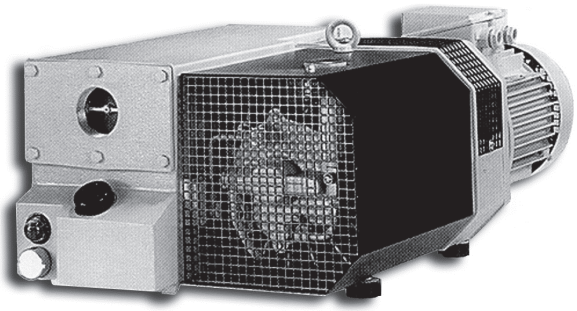

VACUUM PUMP INSTALLATION, GENERAL CONSIDERATIONS

- The vacuum pump should be located in a place where there is adequate ventilation for cooling. Consideration of the noise and heat generated by the pump should be made. It might be desirable to install the pump in a location outside of the laboratory in which the molbloc/molbox system is operating.

- Caution should be exercised when calibrating in gases other than air. Asphyxiation of personnel within a confined space into which the pump exhausts is a real threat when calibrating at high flow rates. Venting of the exhaust gas stream outdoors or into a large ventilated space is recommended.

- In order to minimize the back-pressure applied to the exhaust of the pump, plumbing should be as short and as large in diameter as is practical, but no smaller than the pump's exhaust fitting size. Inlet plumbing length and diameter should follow the same guidelines in order to maximize the efficiency of the vacuum pump. Restrictions in the inlet plumbing will reduce the pumping speed of the pump.

- In cyclic operations, such as flow meter calibrations with molbloc-S, the pump should not be switched off during cycles. Continue to run the pump with the gas ballast valve open and the inlet port closed. Power consumption is minimal when the pump is operating at its ultimate pressure. Limit starting the pump to no more than a few times per day.

TECHNICAL DATA

Pumping Speed	64 cu m/hr. (37.7 cfm)
Average Noise Level	69 dB(A) (free field measurement at 1 m)
Main Voltage	50/60 Hz Volts 230/460 (± 10 %), 3-Phase Supply
Motor Power	1.8 kW (2.5 hp)
Nominal Speed	1 750 RPM
Weight w/oil	47 kg (103.4 lb)
Oil Capacity	2.0 l (2.11 qt)
Inlet/Outlet Connection	1 1/4 in. Female NPT

PN 3152686
April 2014
© 2014 Fluke Corporation. All rights reserved. Specifications are subject to change without notice.
All product names are trademarks of their respective companies.

DIMENSIONAL DATA, mm (in.)

Ø a NPT	Ø b NPT	A_{max}	H	h_1	h_2	h_3	X	Y	Z
1 1/4 in.	1 1/4 in.	695 (27.4)	260 (10.2)	237 (9.3)	216 (8.5)	270 (10.6)	350 (13.8)	100 3.9	150 (5.9)

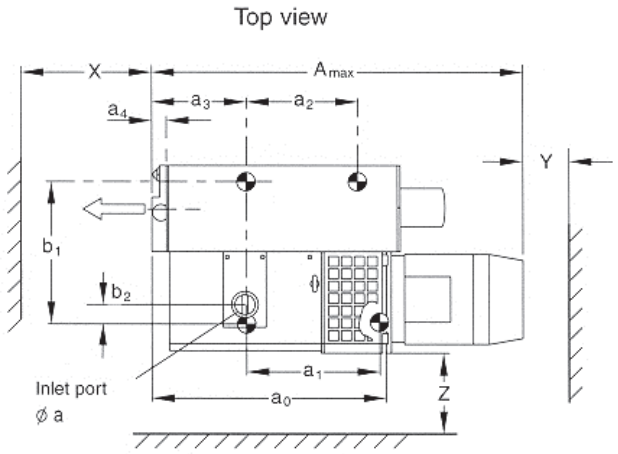

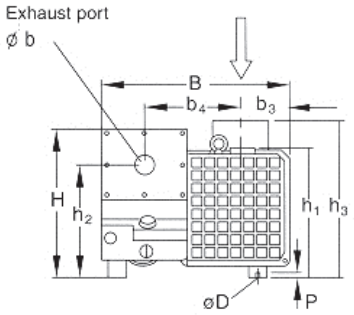

Ø a NPT	Ø b NPT	A_{max}	a_0	a_1	a_2	a_3	a_4
1 1/4 in.	1 1/4 in.	695 (27.4)	260 (10.2)	237 (9.3)	216 (8.5)	270 (10.6)	350 (13.8)

B	b_1	b_2	b_3	Ø D/P
100 3.9	150 (5.9)	1 1/4 in.	1 1/4 in.	695 (27.4)

VARIATIONS, mm (in.)

This pump kit is available in two versions.

	STANDARD PUMP KIT P/N 401940	PFPE PUMP KIT P/N 401883
LUBRICATION TYPE	Paraffin-base Mineral Oil	Perfluorinated Polyether (PFPE)
SERVICE DETAILS	General Purpose – pumping air and chemically inert permanent gases	Special Purpose – pumping strong oxidants such as oxygen, ozone, nitrogen oxides

Please read and understand the enclosed Installation and Operation Manual, Material Safety Data Sheet, and all other enclosed data. Personal injury and/or property damage could result if this equipment is not installed and operated properly. This system should be assembled and operated only by personnel who have been instructed in proper safety practices.