Recommendations for molbloc-S® Installation

INSTRUCTION SHEET

FLUKE® Calibration

The molbloc-S is a high precision metrological instrument whose stability over time is a key component in the performance of the molbloc/molbox™ mass flow calibration system. molbloc-S, like any high accuracy standard, should be handled, operated, and stored with care. Use the following guidelines whenever installing and using the molbloc-S.

AVOID PARTICULATE AND MOISTURE CONTAMINATION

Particulate and moisture contamination must be avoided. Potential sources of contamination, such as an unclean gas supply or device to be calibrated, should not be connected upstream of the molbloc-S without the use of a 5 micron sintered metallic filter upstream of the molbloc-S.

With the exception of ambient air, the molbloc-S should only be used with dry gases. Air compressed on-site (generally known as instrument air) should be filtered to remove oil, moisture and particulates. The final dew point temperature of the calibration gas should be – 40 °C or lower.

MOLBLOC-S CONNECTIONS

The molbloc-S elements designated 5E1-S through 2E3-S have VCR face seal inlet connections and ISO-KF Style vacuum flange outlet connections. The 5E3-S and 1E4-S molbloc-S elements utilize ISO-KF Style vacuum flanges for both the inlet and outlet. See the relevant sections for further details.

CONNECTING, DISCONNECTING AND MOUNTING MOLBLOC-S WITH VCR® FACE SEAL FITTINGS

In making the molbloc-S flow connections, always use soft O-rings. They allow a leak free connection to be accomplished with minimal torque, and they provide a source of flexibility between the molbloc-S and elements to which it is connected, protecting the molbloc-S from mounting stresses.

Use the following O-ring seals for making molbloc-S VCR® connections:

MOLBLOC-S DESIGNATOR	VCR FACE SEAL SIZE	PART NO. DHI	PART NO. PARKER SEAL GROUP, O-RING DIV	COMPOSITION
5E1-S and 1E2-S	1/4 in.	102070	2-202	Fluorocarbon rubber (FKM), Viton®
2E2-S thru 2E3-S	1/2 in.	102912	2-207	Fluorocarbon rubber (FKM), Viton®
5E3-S and 1E4-S	n/a	n/a	n/a	n/a

Making and Breaking Procedure for molbloc-S VCR Face Seal Connection

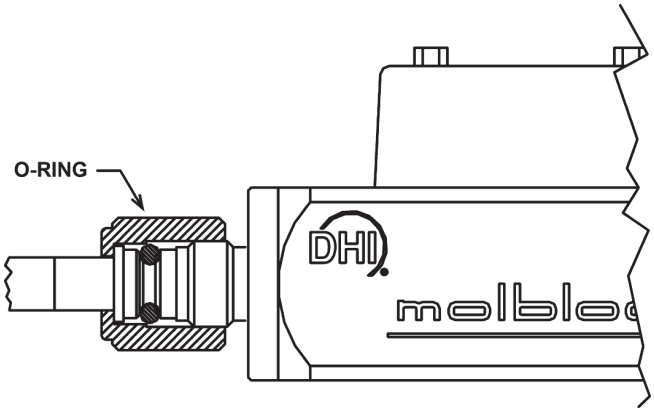

❶ Install the recommended soft O-ring securely against the sealing surface in the nut of the mating fitting.

❷ Align the mating nut with the molbloc's male VCR fitting and thread the nut onto the fitting. Hold the molbloc-S with your hand, rotate the nut until resistance is felt when the O-ring begins to compress.

❸ Holding the molbloc-S with your hand, tighten the nut an additional 1/2 turn. A wrench may be used on the nut if desired, but do not tighten beyond one half turn. If more than one half turn is needed to make a leak free connection, the O-ring may be damaged and should be replaced.

❹ To break the fitting, hold the molbloc-S with your hand and loosen the nut until it is completely backed off.

Never use wrenches to hold the molbloc-S body.

CONNECTING, DISCONNECTING AND MOUNTING MOLBLOC-S WITH ISO-KF STYLE VACUUM FLANGES

The ISO-KF Style vacuum flange fitting utilizes an internal centering ring and an external overpressure ring clamp. The seal is affected by the uniform application of pressure by the clamp on the 15° surface of the mating stainless steel flanges. These mating flange surfaces compress a Viton O-ring that is held in place by the centering ring. The overpressure ring keeps the O-ring in place, and maintains a leak free connection when the system is subjected to internal pressures above vacuum level. This connection is reusable, rotatable, and can operate leak free in vacuum applications up to 10^{-8} Torr, and in positive pressures of 700 kPa (100 psig).

PN 3152658
April 2014
© 2014 Fluke Corporation. All rights reserved. Specifications are subject to change without notice.
All product names are trademarks of their respective companies.

When performing a leak test of a plumbing system that contains the ISO-KF Style Vacuum Flanges, do not exceed the maximum operating pressure of the molbox: 600 kPa (87 psia) for molbox A700k models or 250 kPa (36 psia) for molbox A350K models!

Making and Breaking Procedure for molbloc-S ISO-KF Vacuum Flange Connection

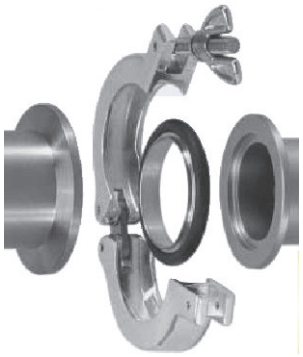

❶ Place the overpressure ring past one of the ISO-KF flanges to be mated.

❷ Place the centering ring into the groove of the ISO-KF flange on the outlet of the molbloc-S.

❸ Align the mating flange against molbloc's ISO-KF flange, and close the gap by hand.

❹ Hold the flanges together and move the overpressure ring directly over the mated flanges.

❺ Place the clamp around the mated flanges. Swing the clamp closed. If necessary loosen the thumbscrew to allow the thrust washer and wing nut to fall into position on top of the clamp. Fully tighten the wing nut by hand.

❻ To break the fitting, hold the molbloc-S with your hand and loosen the wing nut until the clamp can be separated. Remove the clamp, centering ring, and overpressure ring.

Never use wrenches to hold the molbloc-S body, or to tighten the clamp.

ACCESSORIES INCLUDED WITH MOLBLOC-S SHIPMENT

One of the following accessory kits is included in the molbloc-S shipment:

P/N 401953
molbloc-S, Sizes 1E2 and Smaller

DESCRIPTION	QTY	PART NO.
1/4 in. VCR Face Seal O-Ring	2	102070
16 mm ISO-KF Centering Ring	1	101544
16 mm ISO-KF Over-Pressure Ring	1	103240
16 mm ISO-KF Clamp	1	102975
16 mm ISO-KF Blanking Cap	1	103238

P/N 401954
molbloc-S, Sizes 2E2 through 2E3

DESCRIPTION	QTY	PART NO.
1/2 in. VCR Face Seal O-Ring	2	102912
16 mm ISO-KF Centering Ring	1	101544
16 mm ISO-KF Over-Pressure Ring	1	103240
16 mm ISO-KF Clamp	1	102975
16 mm ISO-KF Blanking Cap	1	103238

P/N 401984
molbloc-S, Sizes 5E3 and 1E4

DESCRIPTION	QTY	PART NO.
Adaptor, 25mm ISO-KF x 1 in NPT M	1	103307
25 mm ISO-KF Centering Ring	1	101542
25 mm ISO-KF Over-Pressure Ring	1	103241
25 mm ISO-KF Clamp	1	102121
40 mm ISO-KF Nipple, 4.8 in. long	1	103308
40 mm ISO-KF Centering Ring	2	103245
40 mm ISO-KF Over-Pressure Ring	2	103309
40 mm ISO-KF Clamp	2	103246
40 mm ISO-KF Blanking Cap	1	103310