Installation of 1/4 in. and 1/2 in. molbloc-S® Inlet Flange Conversion Kits

P/Ns 401935 and 401936

INSTRUCTION SHEET

FLUKE® Calibration

Typically the molstic-S mounting system configured with 1/4 in. plumbing is used to accommodate molbloc-S elements with 48 mm square bodies and 1/4 in. male VCR® inlet fittings, designated 1E2-S and smaller. In some cases, when running "low" flows in sub-atmospheric mode, it might be desirable to use molbloc-S elements that normally have 1/2 in. VCR inlet fittings on the 1/4 in. molstic-S mounting system. Use the inlet flange conversion kit, P/N 401935.

The molstic-S mounting system configured with 1/2 in. plumbing can accommodate any molbloc-S elements with 48 mm square bodies, up to 2E3-S. In order to be used on this molstic, any molbloc-S element designated 1E2-S and smaller must have the 1/4 in. VCR inlet fitting replaced with the 1/2 in. VCR end flange through the use of conversion kit P/N 401936.

REPLACING VCR INLET FLANGE ON MOLBLOC-S

Use the following procedure to replace the VCR inlet flange on the molbloc-S element.

❶ Using a 3 mm hex wrench, remove and preserve the socket head caps screws that retain the existing VCR inlet end flange. DO NOT remove the downstream end flange.

❷ Preserve the end flange face seal, Viton® O-ring (**DHI** P/N 102221) Parker P/N 2-022, for use with new flange. Be careful not to damage this seal in any way, as a leak can result which will cause errors during flow measurement.

❸ Position the replacement VCR inlet flange on the end of molbloc-S, making sure that the flange seal is in its proper location, and use caution not to "pinch" the seal between the flange and body.

❹ Thread each of the socket head caps screws into the body, but leave loose enough to allow adjustment in the flange's final position.

❺ Tighten each of the screws in a "star" pattern a little at a time. Finish by tightening to a torque value of 3 Nm on each screw.

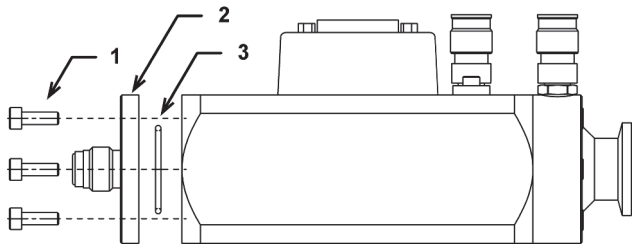

1. Body Screws (6 ea.)
2. Inlet Flange
3. O-ring, #2-022

CONNECTING, DISCONNECTING AND MOUNTING MOLBLOC-S WITH VCR FACE SEAL FITTINGS (MOLBLOC-S INLET FITTING)

In making the molbloc-S upstream flow connections, always use soft O-rings. They allow leak free connections to be accomplished with minimal torque, and they provide a source of flexibility between the molbloc-S and elements to which it is connected, protecting the molbloc-S from mounting stresses.

Use the following O-ring seals for making molbloc-S VCR connections:

VCR FACE SEAL SIZE	PART NO. DHI	PART NO. PARKER SEAL GROUP, O-RING DIV	COMPOSITION
1/4 in.	102070	2-202	Fluorocarbon rubber (FKM), Viton®
1/2 in.	102912	2-207	Fluorocarbon rubber (FKM), Viton®

PN 3152733
April 2014
© 2014 Fluke Corporation. All rights reserved. Specifications are subject to change without notice.
All product names are trademarks of their respective companies.

Making and Breaking Procedure for molbloc-S VCR Face Seal Connection

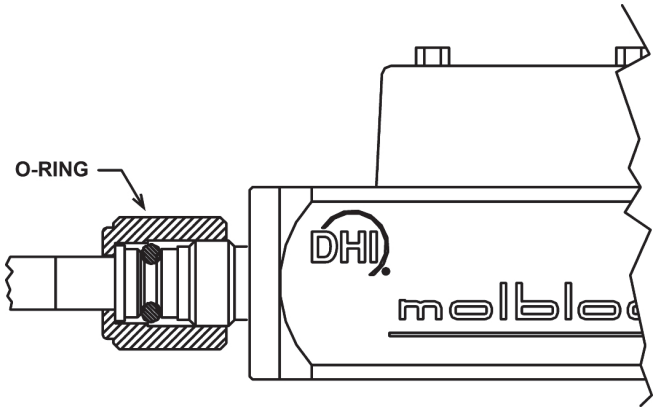

❶ Install the recommended soft O-ring securely against the sealing surface in the nut of the mating fitting.

❷ Align the mating nut with the molbloc's male VCR fitting and thread the nut onto the fitting. Hold the molbloc-S with your hand, rotate the nut until resistance is felt when the O-ring begins to compress.

❸ Holding the molbloc-S with your hand, tighten the nut an additional 1/2 turn. A wrench may be used on the nut if desired, but do not tighten beyond one half turn. If more than one half turn is needed to make a leak free connection, the O-ring may be damaged and should be replaced.

❹ To break the fitting, hold the molbloc-S with your hand and loosen the nut until it is completely backed off.

Never use wrenches to hold the molbloc-S body.

PARTS INCLUDED WITH INLET FLANGE CONVERSION KITS FOR MOLBLOC-S SHIPMENT

Parts included in the molbloc-S conversion kit shipment:

P/N 401935
1/4 in. VCR Conversion Kit

DESCRIPTION	QTY	PART NO.
1/4 in. VCR Inlet Flange	1	123577
molbloc-S Flange O-Ring Seal	1	102221

P/N 401936
1/2 in. VCR Conversion Kit

DESCRIPTION	QTY	PART NO.
1/2 in. VCR Inlet Flange	1	123576
molbloc-S Flange O-Ring Seal	1	102221