molstic™ lo flow

P/N 401316

molbloc™ Mounting System

FLUKE® Calibration

DESCRIPTION

molstics provide an engineered solution to the practical issues of mounting a molbloc, connecting a gas supply, regulating the pressure and connecting the device to be tested. Highest quality components are integrated into a convenient, compact assembly.

The gas supply is attached using a quick connector. A 0.5 micron filter protects the downstream components. Then, an adjustable (50 kPa/7 psig to 700 kPa/100 psig) regulator sets molbloc upstream pressure and protects the molbox transducers against accidental overpressure. A bellows shut-off valve, just before the molbloc, allows the gas supply upstream of the molbloc to be shut-off. A connection and pads are provided downstream of the molbloc for mounting the mass flow controller (MFC), another device under test, or the optional needle valve kit for manual flow control.

molstic, lo flow (P/N 401316) is designed to optimize the use of molbloc ranges of 1 slm and under. It uses a special high stability low flow regulator and a filler rod to reduce the dead volume between the molbloc and the test.

START UP

Starting up a molstic requires connecting a gas pressure supply, adjusting the pressure regulator if necessary, and connecting the device or system to be tested downstream of the molbloc.

❶ **Connect the gas supply:** Connect a gas supply to the quick connector stem (1/4" SWG®, NUPRO® SS-QC4-D-400). Ideally, inlet supply pressure will be regulated to approximately 550 kPa (80 psig). In no case should the supply exceed 690 kPa (100 psig). Note: **Be sure the molstic isolation valve (1) is closed** (handle down) before connecting the quick connector stem to the quick connector. Do not connect or disconnect the quick connector with a pressure greater than 1.5 MPa (200 psi) on either side.

❷ **Install the molbloc:** Install the desired molbloc onto the molstic (see molbloc INSTALLATION AND SWAPPING below).

❸ **Filler rod**: The filler rod is in the accessories. Slip the filler rod (P/N 122900) into the nipple (3).

❹ **Adjust the pressure regulator:** The molstic is delivered with the pressure regulator set to 270 kPa absolute (40 psia) (about 165 kPa gauge (26 psig)), the most common molbloc upstream pressure setting. Depending on the mobloc's pressure dependent calibration type, a different molbloc upstream pressure setting may be needed (see the molbloc calibration report). To adjust the regulator, cap the pressure downstream of the molbloc. Open the molbloc isolation valve (1). Read the molbloc upstream pressure using the [P&T] function of the molbox (see the molbox Operation and Maintenance Manual). Adjust the molbloc upstream pressure to the desired value by inserting a screwdriver into the regulator head (4) and rotating the adjustment screw until the desired pressure is set. Note: **The regulator is NOT self venting.** If desired, lock the regulator setting by putting a wire through the lateral holes in the head.

❺ **Install the MFC/test:** Install the MFC to be used or tested onto the molstic. The MFC pads (2) should assure that the MFC is at the correct height for alignment if the MFC fitting is VCR. For MFC fittings other than VCR, use the appropriate adaptor (not supplied). If you have the needle valve option (P/N 401319) for manual flow control, install it here.

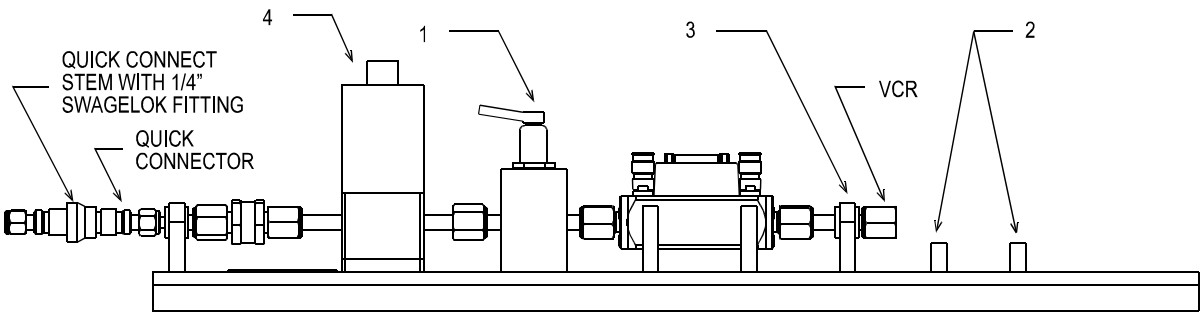

PN 3152468
April 2014
© 2014 Fluke Corporation. All rights reserved. Specifications are subject to change without notice.
All product names are trademarks of their respective companies.

molbloc INSTALLATION AND SWAPPING

❶ Loosen the interconnecting nipple clamp (3) so that the nipple can move freely in its rubber grommet. Move the nipple away from the molbloc cradles to allow maximum room for molbloc insertion.

❷ Place the molbloc in the molstic molbloc cradles (be sure flow orientation is correct). Check that no debris is under molbloc.

❸ Connect and tighten the upstream (valve side) molbloc VCR connection using a soft O-ring and following the procedure provided in Document 560009a (Recommendations for molbloc Installation) supplied with the molbloc.

❹ Pull the interconnecting nipple towards the molbloc downstream connection. Connect and tighten the downstream molbloc VCR connection using a soft O-ring and following the procedure provided in Document 560009a (Recommendations for molbloc Installation) supplied with the molbloc.

❺ Tighten the interconnecting nipple clamp (3) until the nipple is secure (5 N/m max).

❻ Connect molbloc to molbox and leak check the system.

❼ To remove a molbloc from the molstic, reverse the procedure. Break the downstream molbloc VCR connector and pull the interconnecting nipple away from the bloc. Break the upstream molbloc VCR connector. Remove the molbloc.

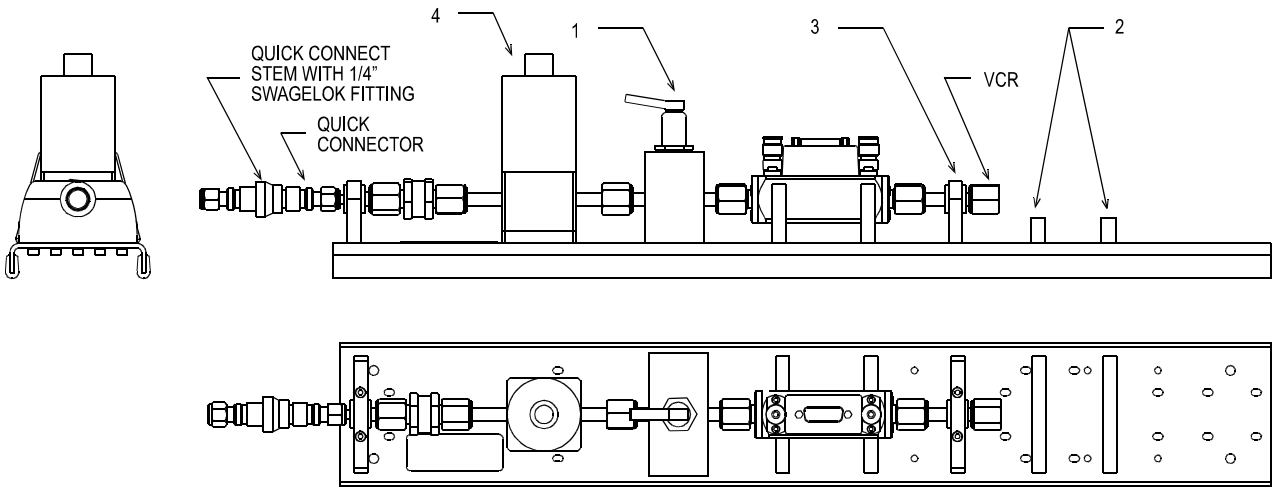

MAINTENANCE AND RECOMMENDATIONS

- Disconnect pressure supply from molstic when not in use.
- **Filter:** The molstic filter is a sealed 0.5 micron sintered filter (NUPRO SS-4FWS-VCR-05). It can be cleaned by backflushing. To backflush, it must be removed from the molstic. When removing, cleaning and installing the filter, the metallic VCR gaskets (NUPRO SS-4-VCR-2-GR) must be replaced and all manufacturers' recommendations followed.
- **Handling:** molstic should not be picked up or carried by its components. Always handle the molstic by its base.
- **Filler rod**: The filler rod, used to reduce the dead volume between the molbloc and the test, is delivered in the molstic accessory kit. It should be slipped into the nipple (3). It is not held in the nipple. Take care not to lose it when making the corrections or moving the molstic.