FLUKE®
Calibration

Recommendations for molbloc™ Installation

Instruction Sheet

The molbloc is a high precision metrological instrument whose stability over time is a key component in the performance of the molbloc/molbox™ mass flow calibration system. molbloc, like any high accuracy standard, should be handled, operated, and stored with care. It is important to guard against any possibility of altering the integrity of the molbloc's internal flow path.

The flow path integrity risk factors include:

Contamination: *Particulate and condensation contamination should be avoided. Only clean dry gasses should be flowed. Potential sources of contamination such as unclean devices to be calibrated should not be connected upstream of the molbloc. It is recommended that a sintered metallic filter be installed upstream of the molbloc (0.5 micron for flows of less than 1 slm, 2 micron for flows equal or greater than 1 slm.)*

Shock: *Shock in excess of 50 g can cause movement of the molbloc's internal elements. Dropping a molbloc from a bench to the floor is likely to cause a shock exceeding 50 g.*

Mounting Stresses: *Stress applied to the molbloc from applying torque to connections and/or mounting the molbloc using rigid connecting members can cause temporary or permanent changes in molbloc readings. To avoid these situations, always follow the instructions below when connecting, disconnecting, and mounting the molbloc. Never "force" the molbloc between misaligned or improperly spaced connections.*

Connecting, Disconnecting and Mounting molblocs™ with VCR® Face Seal Fittings

Use Soft O-Rings

In making the molbloc flow connections, always use soft O-rings. These have two advantages:

- *They allow a leak free connection to be made with minimal torque.*
- *They provide a source of flexibility between the molbloc and elements to which it is connected, protecting the molbloc from mounting stresses.*

The recommended O-rings for making molbloc VCR® connections are:

- *Size: For 1E5 molbloc (100 slm molbloc): 2-207 (Parker Seal Group, O-Ring Division)*
  For all other molblocs: 2-202 (Parker Seal Group, O-Ring Division)
- *Material: Fluorocarbon rubber (FKM), Viton®*

Four of the o-rings recommended for the molbloc with which this was delivered have been supplied with this instruction sheet.

Making and Breaking Procedure for molbloc VCR® Connection

❶ *Install the recommended soft O-ring securely against the sealing surface in the nut of the mating fitting. (See Figure 1)*

❷ *Align the mating nut with the molbloc's male VCR® fitting and thread the nut onto the fitting. Hold the molbloc with your hand, rotate the nut until resistance is felt when the O-ring begins to compress.*

❸ *Holding the molbloc with your hand, tighten the nut an additional 1/2 turn. A wrench may be used on the nut if desired, but do not tighten beyond one half turn. If more than one half turn is needed to make a leak free connection, the O-ring may be damaged and should be replaced.*

❹ *To break the fitting, hold the molbloc with your hand and loosen the nut until it is completely backed off.*

⚠ Caution

Never use wrenches to hold the molbloc body.

PN 3152446
April 2014
© 2014 Fluke Corporation. All rights reserved. Specifications are subject to change without notice.
All product names are trademarks of their respective companies.

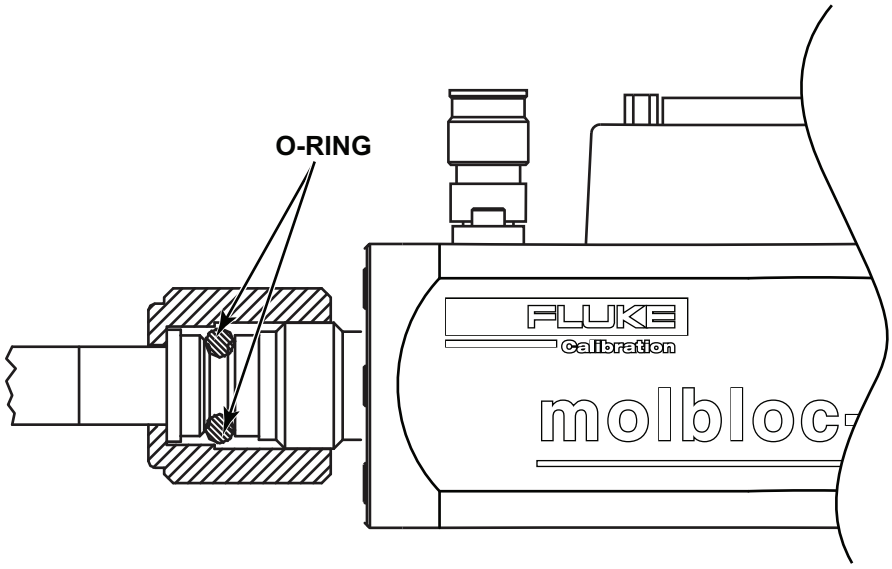

Figure 1: *O-Ring Location on the molbloc*

Viton is a registered trademark of DuPont deNemours Company.
VCR is a registered trademark of Swagelok Company.