FLUKE ®

Ti20 Thermal Imager
Quick Reference Guide

⚠ See *Users Manual* for "Safety Information" and complete operating information.

Turning the Imager ON and OFF

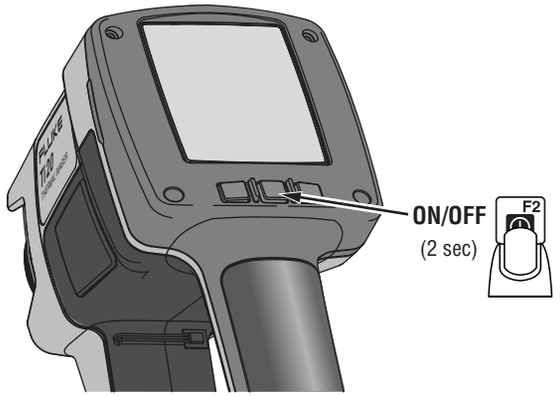

Focus the Imager

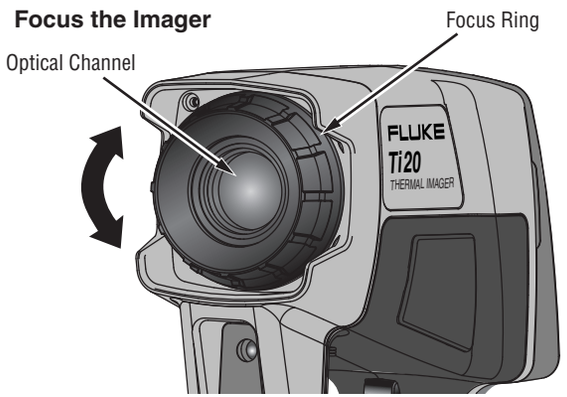

PN 2492228 December 2005 Rev. 1, 5/06
©2005. 2006 Fluke Corporation. All rights reserved. Printed in USA.
Visit Fluke's website @ www.fluke.com

Capturing an Image

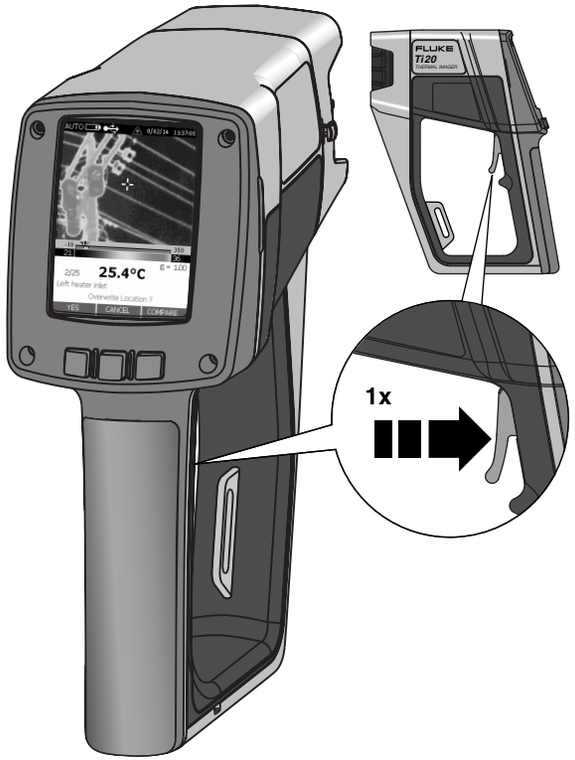

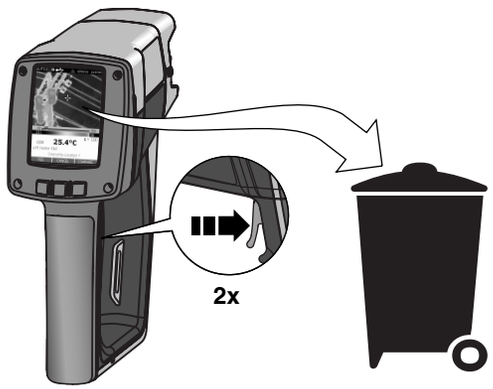

Connecting the USB Cable

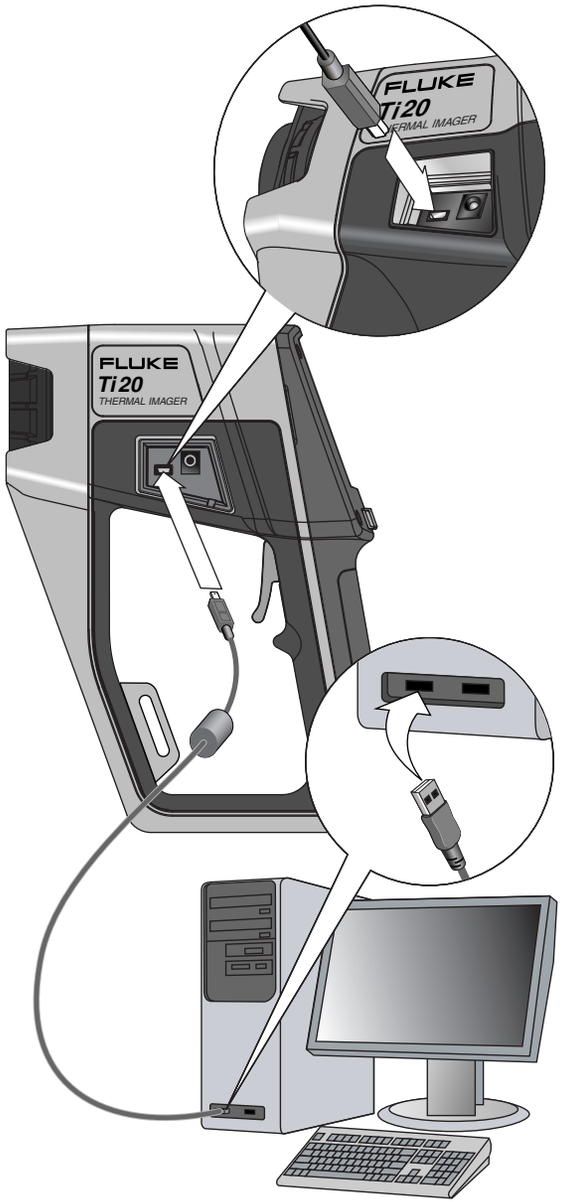

Distance to Spot Size Ratio

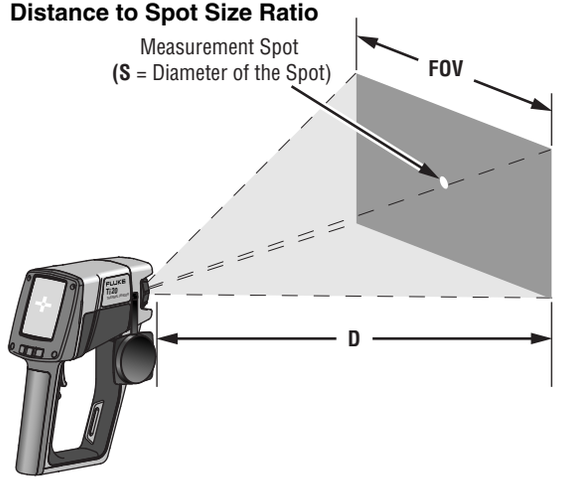

Correct Field of View

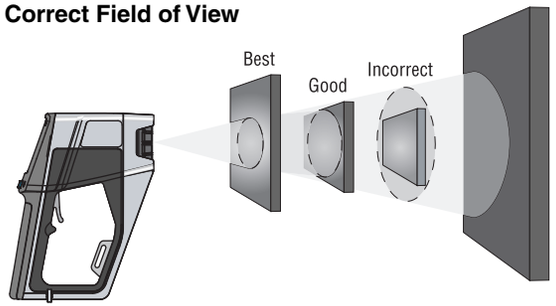

Reflected Temperature Compensation

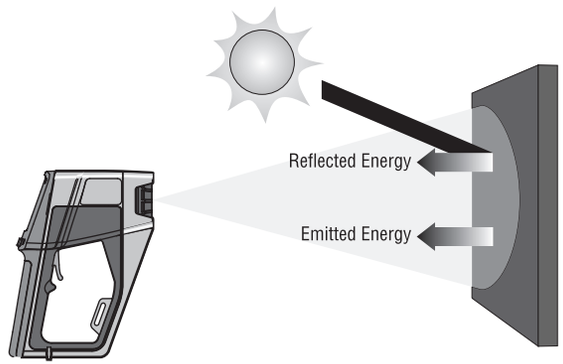

Recharging the Batteries Internally

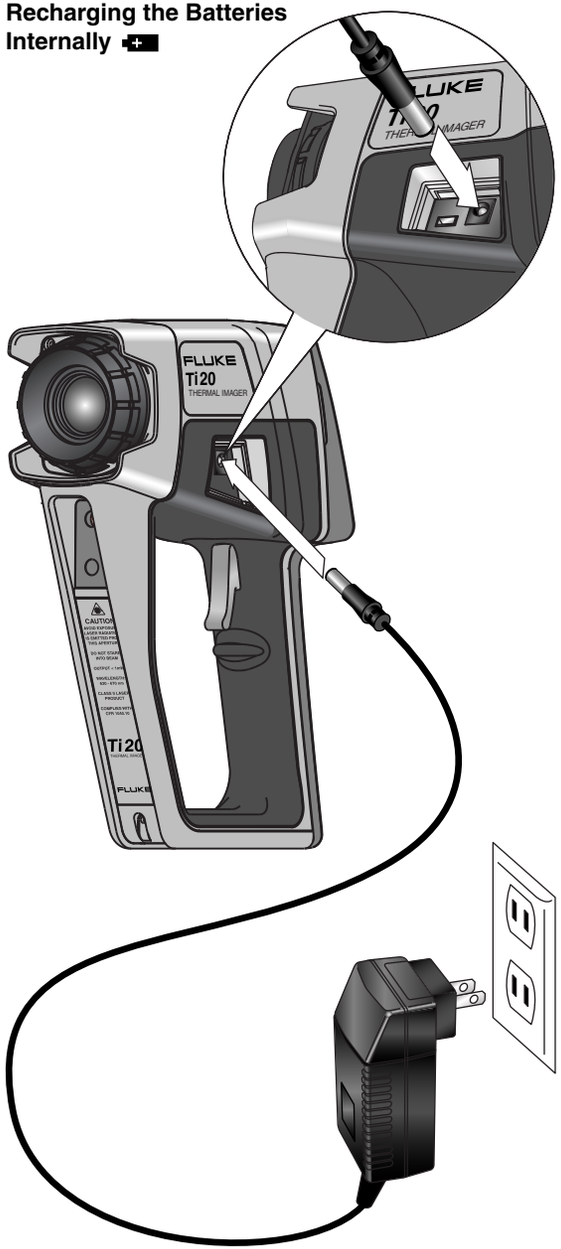

Recharging the Batteries Externally

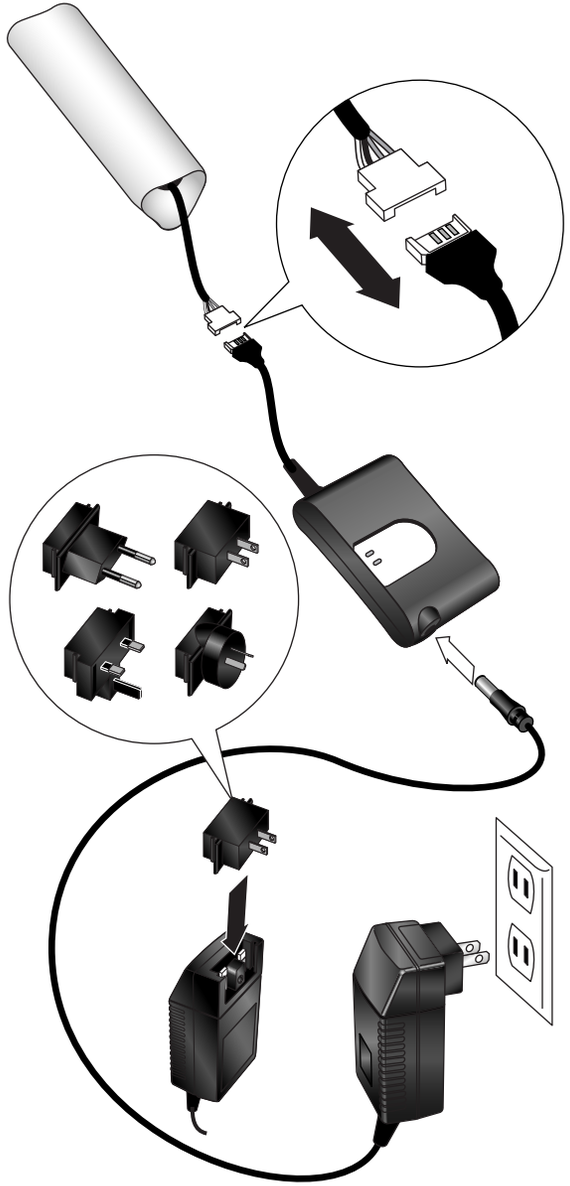

Replacing the Batteries

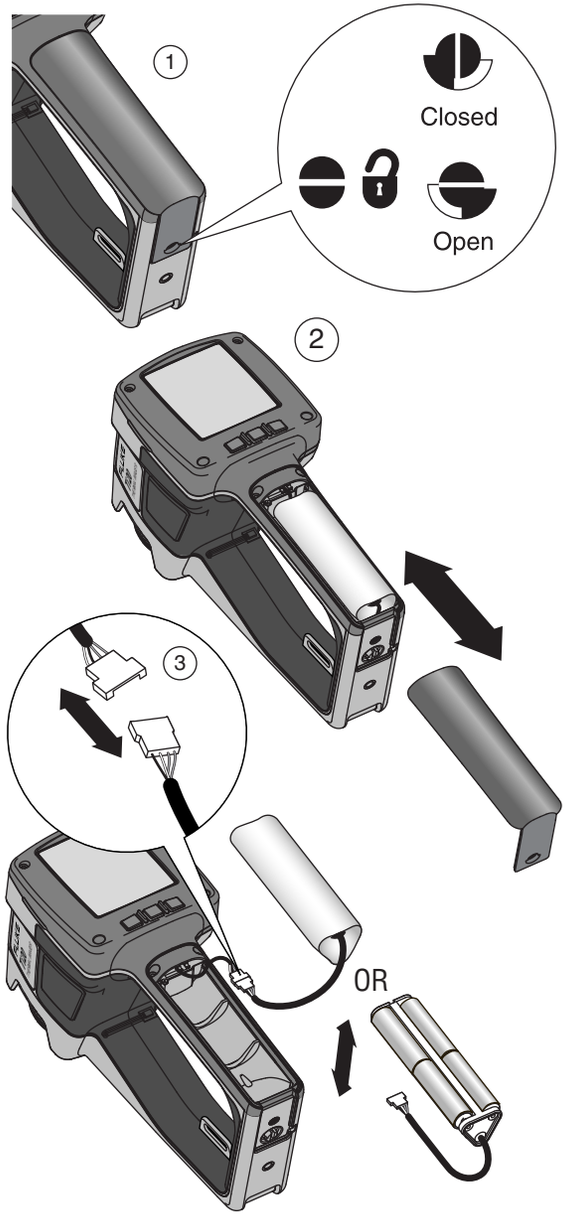

Wrist Strap

