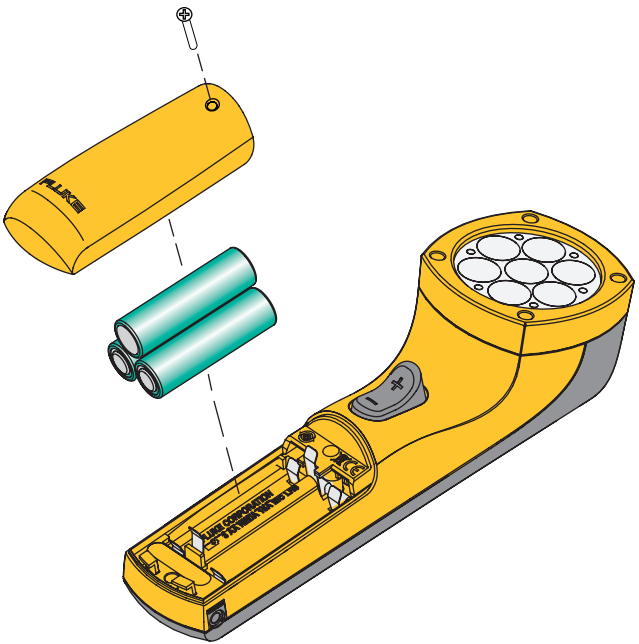

FLUKE®

820-2
Stroboscope

Quick Reference Guide

⚠Warning

To prevent possible injury read the "820 Safety Sheet" before you use this Product.

Go to **www.fluke.com** to register your product, download manuals, and find more information.

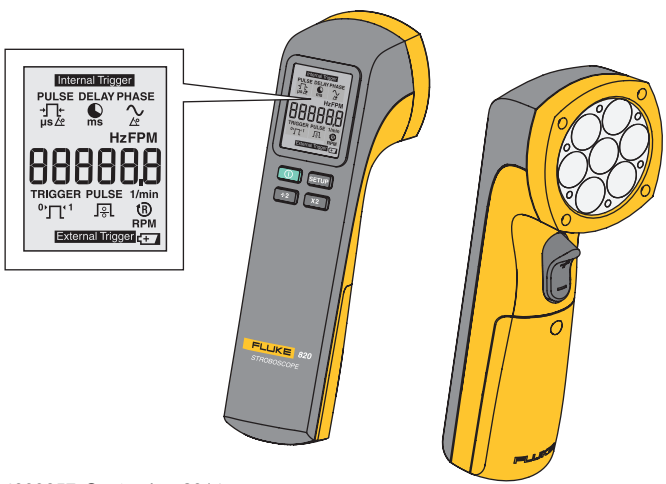

PN 4399857 September 2014
© 2014 Fluke Corporation. All rights reserved.

Basic Operation

