FLUKE®

789
ProcessMeter

Product Overview (E)

PN 1627890
August 2002 Rev. 2, 8/09
© 2002-2009 Fluke Corporation. All rights reserved. Printed in USA.
Specifications are subject to change without notice. All product names are trademarks of their respective companies.

LIMITED WARRANTY AND LIMITATION OF LIABILITY

This Fluke product will be free from defects in material and workmanship for three years from the date of purchase. This warranty does not cover fuses, disposable batteries, or damage from accident, neglect, misuse, alteration, contamination, or abnormal conditions of operation or handling. Resellers are not authorized to extend any other warranty on Fluke's behalf. To obtain service during the warranty period, contact your nearest Fluke authorized service center to obtain return authorization information, then send the product to that Service Center with a description of the problem.

THIS WARRANTY IS YOUR ONLY REMEDY. NO OTHER WARRANTIES, SUCH AS FITNESS FOR A PARTICULAR PURPOSE, ARE EXPRESSED OR IMPLIED. FLUKE IS NOT LIABLE FOR ANY SPECIAL, INDIRECT, INCIDENTAL OR CONSEQUENTIAL DAMAGES OR LOSSES, ARISING FROM ANY CAUSE OR THEORY. Since some states or countries do not allow the exclusion or limitation of an implied warranty or of incidental or consequential damages, this limitation of liability may not apply to you.

Fluke Corporation
P.O. Box 9090
Everett, WA 98206-9090
U.S.A.

Fluke Europe B.V.
P.O. Box 1186
5602 BD Eindhoven
The Netherlands

11/99

Table of Contents

Title	Page
Quick Reference Information	ii
Introduction	1
Accessing the Users Manual	1
Contacting Fluke	1
Safety Information	2
How to Get Started	5
Getting Acquainted with the Meter	6
Power-Up Options	18
General Maintenance	19
Replacing the Batteries	19
Replacing a Fuse	21
Cleaning	21
Replacement Parts and Accessories	22
Specifications	26

Quick Reference Information

Read Safety Information in the 789 Users Manual (located on CD)

Measure Buttons	
MIN MAX	Selects a MIN, MAX, or AVG action
RANGE	Selects a fixed range (hold 1 second for auto range)
HOLD	Toggles AutoHold
)))	When in Ω, selects continuity
REL Δ	Toggles relative reading (sets a relative zero point)
Hz	When in V, selects frequency counter
◯ (blue)	When in Ω selects diode test
◯ (blue)	When in A, toggles ac or dc

Output mA ≎ Buttons	
% STEP	Adjusts output up or down to the next 25 % step
COARSE	Adjust output up or down 0.1 mA
FINE	Adjusts output up or down 0.001 mA
0%	Sets output to 0 %
100%	Sets output to 100 %

Output mA ⋀⋀⌐⌐ Choices	
◯ (Blue) Cycles through:	
⋀⋀	Fast repeating 0 % - 100 % - 0 % ramp
⌐	Slow repeating 0 % - 100 % - 0 % ramp in 25% steps
⌐	Fast repeating 0 % - 100 % - 0 % ramp in 25 % steps
⋀	Slow repeating 0 % - 100 % - 0 % ramp

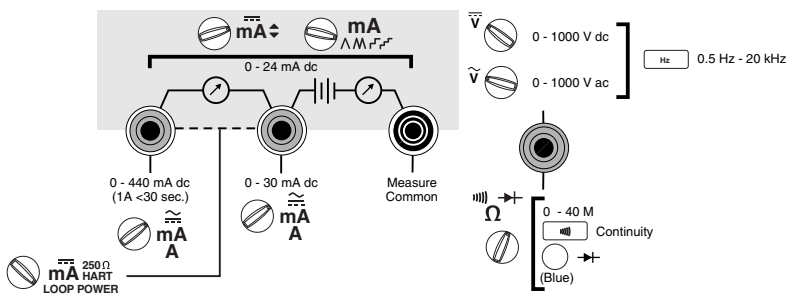

ProcessMeter

Introduction

⚠Warning

Read "Safety Information" before using the meter.

The Fluke 789 ProcessMeter™ (referred to as "the meter") is a handheld, battery-operated tool for measuring electrical parameters, supplying steady or ramping current to test process instruments, and providing a > 24 V loop power supply. It has all the features of a digital multimeter, plus current output capability.

If the meter is damaged or something is missing, contact the place of purchase immediately. Contact a Fluke distributor for information about DMM (digital multimeter) accessories. To order replacement parts or spares, see Table 8 near the end of this manual.

Accessing the Users Manual

The *789 Users Manual* is available on the 789 CD-ROM shipped with the ProcessMeter. If AutoRun is disabled on your computer, from the Start menu, select Run, (CD-Drive letter):\launch.exe <Enter>.

If the CD-ROM is damaged or you are unable to access the product documentation from the CD-ROM, refer to the phone numbers listed under "Contacting Fluke" or visit **www.fluke.com** to obtain product documentation.

Contacting Fluke

To contact Fluke, call one of the following telephone numbers:

- Technical Support USA: 1-800-44-FLUKE (1-800-443-5853)
- Calibration/Repair USA: 1-888-99-FLUKE (1-888-993-5853)
- Canada: 1-800-36-FLUKE (1-800-363-5853)
- Europe: +31 402-675-200
- Japan: +81-3-3434-0181
- Singapore: +65-738-5655
- Anywhere in the world: +1-425-446-5500

Or, visit Fluke's website at www.fluke.com.

To register your product, visit http://register.fluke.com.

To view, print, or download the latest manual supplement, visit http://us.fluke.com/usen/support/manuals.

Address correspondence to:

Fluke Corporation
P.O. Box 9090,
Everett, WA 98206-9090
U.S.A.

Fluke Europe B.V.
P.O. Box 1186,
5602 BD Eindhoven
The Netherlands

Safety Information

The Meter complies with EN61010-1:2001, ANSI/ISA S82.01-2004, CAN/CSA C22.2 No. 1010-1:2004, UL61010-1, Measurement Category III, 1000V, Pollution Degree 2 and Measurement Category IV, 600V, Pollution Degree 2.

A **Warning** identifies conditions and actions that pose hazard(s) to the user; a **Caution** identifies conditions and actions that may damage the meter or the equipment under test.

International symbols used on the meter and in this manual are explained in Table 1.

⚠Warning

To avoid possible electric shock or personal injury:

- **Do not use the meter if it is damaged. Before using the meter, inspect the case. Look for cracks or missing plastic. Pay particular attention to the insulation surrounding the connectors.**
- **Make sure the battery door is closed and latched before operating the meter.**
- **Remove test leads from the meter before opening the battery door.**
- **Inspect the test leads for damaged insulation or exposed metal. Check test lead continuity. Replace damaged test leads before using the meter.**
- **Do not use the meter if it operates abnormally. Protection may be impaired. When in doubt, have the meter serviced.**
- **Do not use the Meter around explosive gas, vapor or in damp or wet environments.**

- **Use only type AA batteries, properly installed in the meter case, to power the meter.**
- **When servicing the meter, use only specified replacement parts.**
- **Use caution when working above 30 V ac rms, 42 V ac pk, or 60 V dc. Such voltages pose a shock hazard.**
- **When using the probes, keep fingers behind the finger guards on the probes.**
- **Connect the common test lead before connecting the live test lead. When disconnecting test leads, disconnect the live test lead first.**

⚠Caution

To avoid possible damage to meter or to equipment under test:

- **Disconnect the power and discharge all high-voltage capacitors before testing resistance or continuity.**
- **Use the proper jacks, function, and range for the measurement or sourcing application.**

Table 1. International Symbols

Symbol	Meaning	Symbol	Meaning
~	Alternating current	⏚	Earth ground
⎓	Direct current		Fuse
≂	Alternating or direct current	CE	Conforms to European Union directives
⚠	Risk of danger. Important information. See manual.	C SP US	Conforms to relevant Canadian Standards Association directives
	Battery	⧈	Double insulated
CLASSIFIED UL To 61010-1 2nd Edition	Meets Underwriters' Laboratories safety requirements	TUV SUD	Inspected and licensed by TÜV Product Services
CAT III	IEC Overvoltage Category III Category III equipment is designed to protect against transients in equipment in fixed equipment installations, such as distribution panels, feeders and short branch circuits, and lighting systems in large building.	N10140	Conforms to relevant Australian standards
CAT IV	IEC Overvoltage Category IV CAT IV equipment is designed to protect against transients from the primary supply level, such as an electricity meter or an overhead or underground utility service.		Do not dispose of this product as unsorted municipal waste. Go to Fluke's website for recycling information.

How to Get Started

If familiar with the Fluke 80 Series DMM, read “Using the Current Output Functions,” review the tables and figures in “Getting Acquainted with the Meter,” and begin using the meter.

If unfamiliar with Fluke 80 Series DMMs, or DMMs in general, read “Measuring Electrical Parameters” in addition to the sections referenced in the previous paragraph.

The sections following “Using the Current Output Functions” contain information about the power-up options, and battery and fuse replacement instructions.

Later, use the Product Overview to refresh your memory about the various functions and features that can be used.

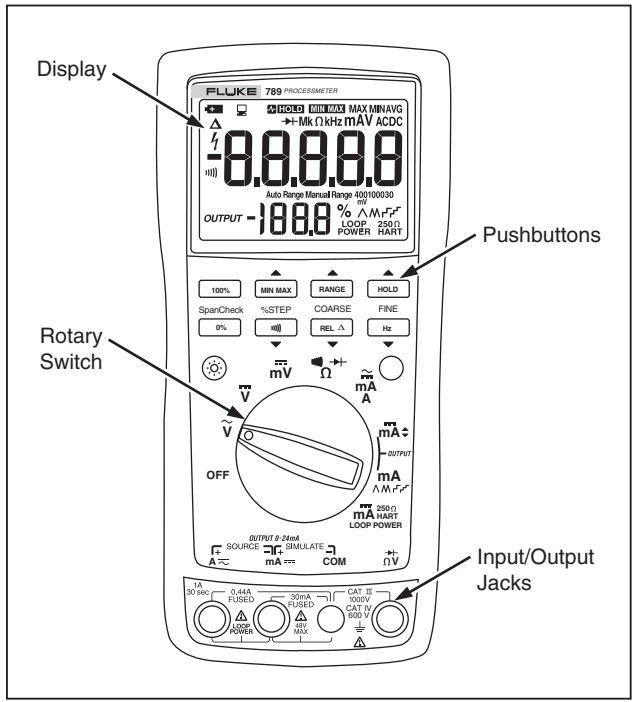

anw014f.eps

Figure 1. Fluke 789 ProcessMeter

Getting Acquainted with the Meter

To become familiar with the features and functions of the meter, study the following figures and tables.

- Figure 2 and Table 2 describe the input/output jacks.
- Figure 3 and Table 3 describe the input functions of the first six rotary function switch positions.
- Figure 4 and Tables 4 and 5 describe the output functions of the last three rotary function switch positions.
- Figure 5 and Table 6 describe the functions of the pushbuttons.
- Figure 6 and Table 7 explain what all the elements of the display indicate.

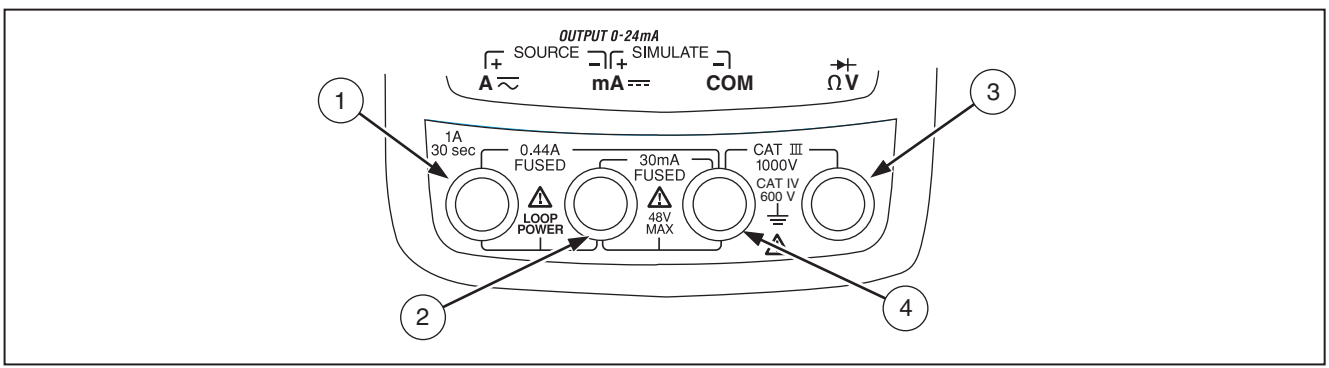

anw001f.eps

Figure 2. Input/Output Jacks

Table 2. Input/Output Jacks

Item	Jack	Measurement Functions	Source Current Function	Simulate Transmitter Function
①	**A** ⎓	Input for current to 440 mA continuous. (1 A for up to 30 seconds.) Fused with a 440 mA fuse.	Output for dc current to 24 mA. Output for loop power supply.	
②	**mA** ⎓	Input for current to 30 mA. Fused with a 440 mA fuse.	Common for dc current output to 24 mA. Common for loop power supply.	Output for transmitter simulation to 24 mA. (Use in series with an external loop supply.)
③	→||← Ω**V**	Input for voltage to 1000 V, Ω, continuity, and diode test.		
④	**COM**	Common for all measurements.		Common for transmitter simulation to 24 mA. (Use in series with an external loop supply.)

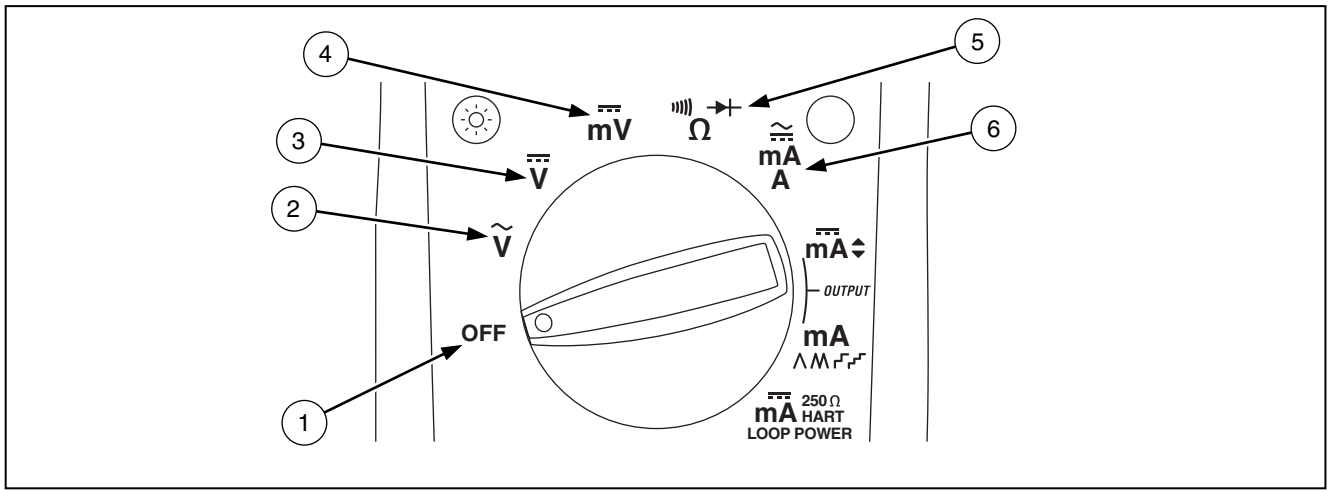

anw002f.eps

Figure 3. Rotary Switch Positions for Measurements

Table 3. Rotary Function Switch Positions for Measurements

No.	Position	Function(s)	Pushbutton Actions
①	OFF	Meter off	
②	$\tilde{V}$	Default: Measure ac V Hz Frequency counter	MIN MAX Selects a MIN, MAX, or AVG action RANGE Selects a fixed range (hold 1 second for auto range) HOLD Toggles AutoHold REL Δ Toggles relative reading (sets a relative zero point)
③	$\overline{\overline{V}}$	Default: Measure dc V Hz Frequency counter	Same as above
④	$\overline{\overline{mV}}$	Default: Measure dc mV Hz Frequency counter	Same as above
⑤	Ω	Default: Measure Ω for continuity ◯(Blue) test	Same as above, except diode test has only one range
⑥	mA A	*High test lead in* ≂ A: Measure A dc ◯(Blue) selects ac *High test lead in* ⎓ mA: Measure mA dc	Same as above, except there is only one range for each input jack position, 30 mA or 1 A

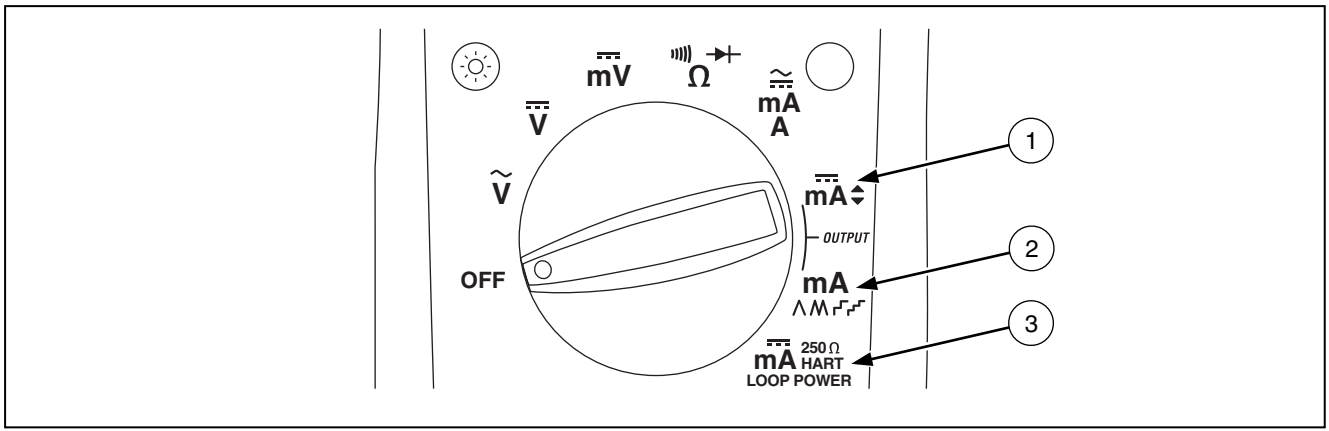

anw008f.eps

Figure 4. Rotary Switch Positions for mA Output

Table 4. Rotary Function Switch Positions for mA Output

No.	Position	Default Function	Pushbutton Actions
①	*OUTPUT* mA⇕	*Test leads in* **SOURCE:** Source 0 % mA *Test leads in* **SIMULATE:** Sink 0 % mA	**%** STEP ▲ or ▼: Adjusts output up or down to the next 25 % step COARSE ▲ or ▼: Adjusts output up or down 0.1 mA FINE ▲ or ▼: Adjusts output up or down 0.001 mA 0% sets output to 0 % 100% sets output to 100 %
②	*OUTPUT* **mA** ⋀⋀⌐⌐	*Test leads in* **SOURCE:** Source repeating 0 % -100 %-0 % slow ramp (⋀) *Test leads in* **SIMULATE:** Sink repeating 0 % -100 %-0 % slow ramp (⋀)	◯(Blue) cycles through: • Fast repeating 0 % -100 % - 0 % ramp (⋀⋀ on display) • Slow repeating 0 % -100 % - 0 % ramp in 25 % steps (⌐ on display) • Fast repeating 0 % -100 % - 0 % ramp in 25 % steps (⌐on display) • Slow repeating 0 % -100 % - 0 % ramp (⋀ on display)

Table 5. Rotary Function Switch Position for Loop Supply

No.	Position	Default Function	Pushbutton Actions
③	mA 250 Ω HART LOOP POWER	Test leads in SOURCE: Supply > 24 V loop power, measure mA	◯(Blue) cycles through: • 250 Ω series resistor for HART communication switched in • 250 Ω series resistor switched out

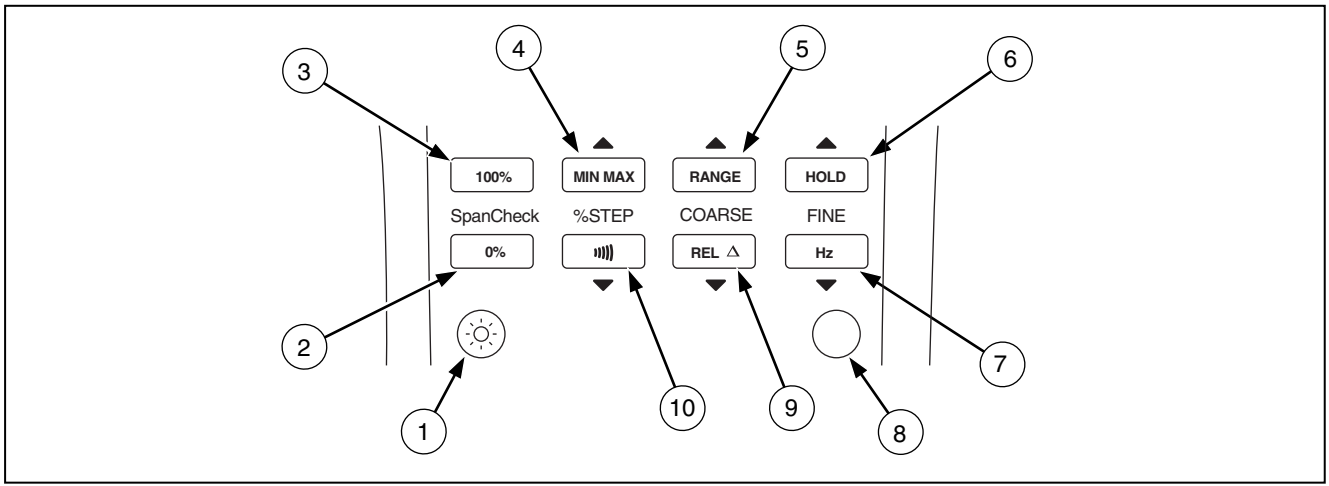

anw003f.eps

Figure 5. Pushbuttons

Table 6. Pushbuttons

No.	Pushbutton	Function(s)
①	☼	Toggles the backlight (low, high, and off)
②	Span Check 0%	*mA Output:* Adjusts mA output to 0 % value (4 mA or 0 mA)
③	100% Span Check	*mA Output:* Sets mA output to 100 % value (20 mA)
④	▲ MIN MAX % STEP	*Measuring:* Selects a MIN, MAX, or AVG action *mA Output:* Adjusts mA output up to the next higher 25 % step
⑤	▲ RANGE COARSE	*Measuring:* Selects a fixed range (hold for 1 second for auto range) *mA Output:* Adjusts output up 0.1 mA
⑥	▲ HOLD FINE	*Measuring:* Toggles AutoHold, or in MIN MAX recording, suspends recording *mA Output:* Adjusts output up 0.001 mA

Table 6. Pushbuttons (cont.)

No.	Pushbutton	Function(s)
⑦	FINE Hz ▼	*Measuring:* Toggles between frequency counter and voltage measurement functions *mA Output:* Adjusts output down 0.001 mA
⑧	○ (BLUE) (alternate function)	Rotary function switch in mA/A position and test lead plugged into A⎓ jack: Toggles between ac and dc ampere measure Rotary function switch in Ω position: Toggles diode test function (→|←) Rotary function switch in *OUTPUT* mA position: Cycles through • Slow repeating 0 % -100 % - 0 % ramp (/\ on display) • Fast repeating 0 % -100 % - 0 % ramp (/\/\ on display) • Slow repeating 0 % -100 % - 0 % ramp in 25 % steps (⌐¬ on display) • Fast repeating 0 % - 100 % - 0 % ramp in 25 % steps (⌐¬ on display) Rotary function switch in loop supply position • Switch in/out 250 Ω series resistor
⑨	COARSE REL Δ ▼	*Measuring:* Toggles relative reading (sets a relative zero point) *mA Output:* Adjusts output down 0.1 mA
⑩	% STEP)))) ▼	*Measuring:* Toggles between Ω measure and continuity functions *mA Output:* Adjusts mA output down to the next lower 25 % step

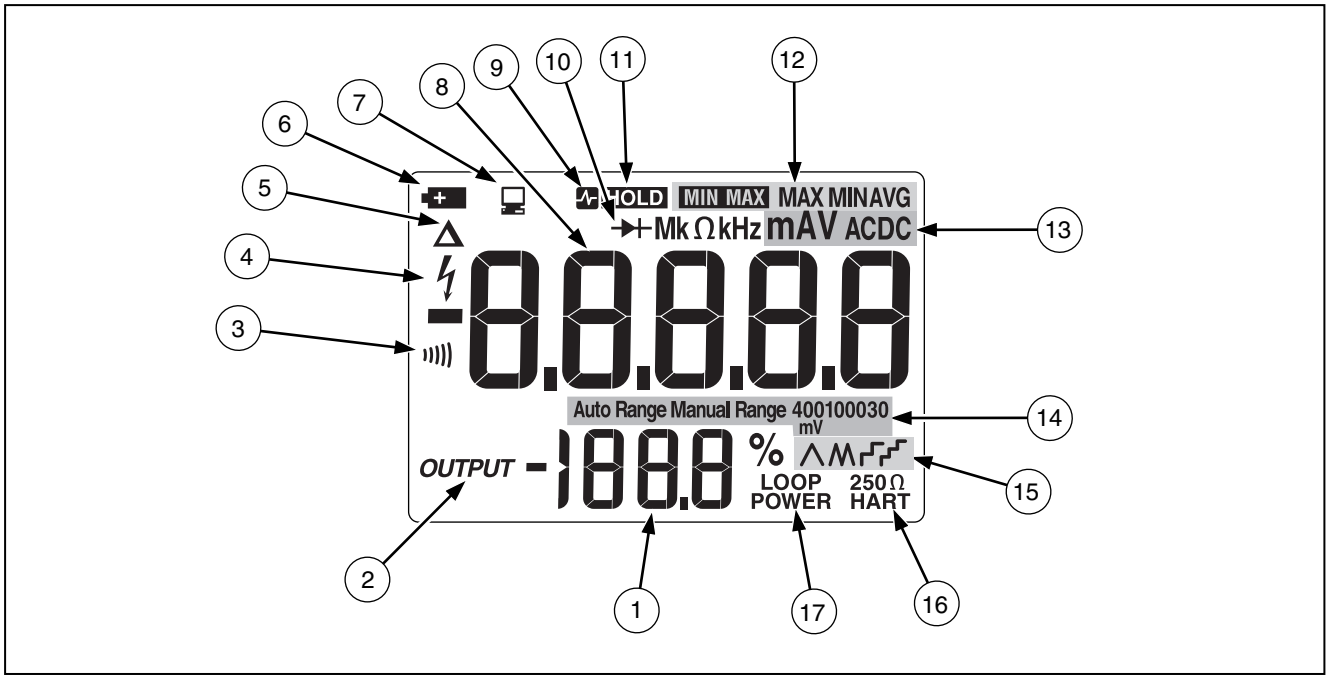

anw004f.eps

Figure 6. Elements of the Display

Table 7. Display

No.	Element	Meaning
①	% (Percentage display)	Shows the mA measured value or output level in %, in a 0-20 mA or 4-20 mA scale (change scales with power-up option)
②	*OUTPUT*	Lights when mA output (source or simulate) is active
③	)))))	Lights in continuity function
④	ϟ	Lights when dangerous voltage is present
⑤	△	Lights when relative reading is on
⑥	+▬	Lights when the battery is low
⑦	🖳	Lights when the meter is transmitting or receiving over the IR port
⑧	Numerals	Show the input or output value
⑨⑪	HOLD	Lights when AutoHold is on
⑩	▶|	Lights in diode test function
⑪	HOLD	Lights when MIN MAX recording is held
⑫	MIN MAX **MAX MINAVG**	MIN MAX recording status indicators: MIN MAX - MIN MAX recording is on MAX - the display is showing the maximum-recorded value MIN - the display is showing the minimum-recorded value AVG - the display is showing the average value since starting recording (up to about 40 hours continuous recording time)

Table 7. Display (cont.)

No.	Element	Meaning
⑬	**mA, DC, mV, AC, M or kΩ, kHz**	Show the input or output units and multipliers associated with the numerals
⑭	**Auto Range** **Manual Range**	Range status indicators: **Auto Range** - autoranging is on **Manual Range** - the range is fixed
	400100030 **mV**	The number plus the unit and multiplier indicate the active range.
⑮	⋀⋀ ⌐⌐	One of these lights in mA ramping or step output (rotary function switch position **mA**⋀⋀ ⌐⌐): ⋀ - slow continuous 0 % - 100 % - 0 % ramping (40 seconds) ⋀⋀ - fast continuous 0 % - 100 % - 0 % ramping (15 seconds) ⌐ - slow ramp in 25 % steps (15 seconds/step) ⌐ - fast ramp in 25 % steps (5 seconds/step)
⑯	**250 Ω** **HART**	Lights when 250 Ω series resistance is switched in
⑰	**Loop Power**	Lights when in loop supply mode

Power-Up Options

To select a power-up option, hold down the pushbutton shown in Table 8 while turning the rotary function switch from OFF to any on position. Wait 2 seconds before releasing the pushbutton after powering up the meter. The meter beeps to acknowledge the power-up option.

Only the setting for current span is retained when the power is turned off. The other options have to be repeated for each operating session.

Holding down more than one pushbutton can activate more than one power-up option.

Table 8. Power-Up Options

Option	Pushbutton	Default	Action Taken
Change current span 0 % setting	RANGE	Remembers last setting	Toggles between 0 - 20 mA and 4 - 20 mA range
Disable beeper		Enabled	Disables beeper
Disable auto power-off	◯ (Blue)	Enabled	Disables the feature that turns off the meter power after 30 minutes of inactivity. Auto power off is disabled regardless of this option if MIN MAX recording is on.
Display test/show firmware version	HOLD	Disabled	Display HOLD (as long as button is pushed), then shows firmware version.

General Maintenance

Periodically wipe the case with a damp cloth and detergent; do not use abrasives or solvents.

Replacing the Batteries

⚠ Warning

To avoid electrical shock:

- **Remove test leads from the meter before opening the battery door.**
- **Close and latch the battery door before using the meter.**

Replace the batteries as follows. Refer to Figure 7. Use four AA alkaline batteries.

1. Remove the test leads and turn the meter OFF.
2. With a standard blade hand screwdriver, turn each battery door screw counterclockwise so that the slot is parallel with the screw picture molded into the case.
3. Lift off the battery door.
4. Remove the meter's batteries.
5. Replace with four new AA alkaline batteries.
6. Reinstall the battery door and tighten screws.

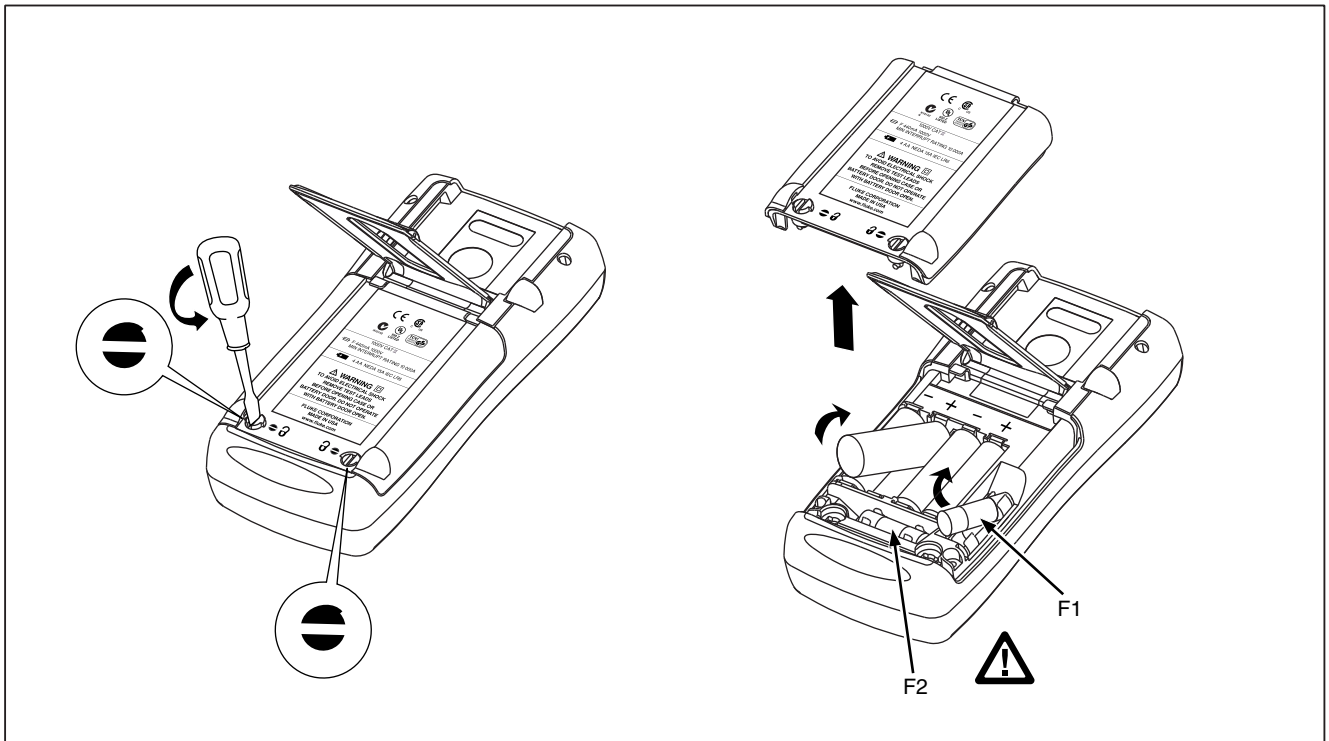

anw037.eps

Figure 7. Replacing the Batteries and Fuses

Replacing a Fuse

⚠ Warning

To avoid personal injury or damage to the meter, use only the specified replacement fuse, 440 mA 1000 V fast-blow, Fluke PN 943121.

Both current input jacks are fused with a separate 440 mA fuse. To determine if a fuse is blown:

1. Turn the rotary function switch to mA A.
2. Plug the black test lead into COM, and the red test lead into the **A** input.
3. Using an ohmmeter, check the resistance between the meter test leads. If the resistance is about 1 Ω, the fuse is good. An open reading means that fuse F1 is blown.
4. Move red test lead **mA**.
5. Using an ohmmeter, check the resistance between the meter test leads. If the resistance is about 14 Ω, the fuse is good. An open means that fuse F2 is blown.

If a fuse is blown, replace it as follows. Refer to Figure 7 as necessary:

1. Remove the test leads from the meter and turn the meter OFF.
2. With a standard blade hand screwdriver, turn each battery door screw counterclockwise so that the slot is parallel with the screw picture molded into the case.
3. Remove either fuse by gently prying one end loose, then sliding the fuse out of its bracket.
4. Replace the blown fuse(s).
5. Replace the battery access door. Secure the door by turning the screws one-quarter turn clockwise.

Cleaning

Clean the meter periodically by wiping it with a damp cloth and detergent. Do not use abrasive cleaners or solvents.

Replacement Parts and Accessories

⚠ Warning

To avoid personal injury or damage to the meter, use only the specified replacement fuse, 440 mA 1000 V fast-blow, Fluke PN 943121.

Note

When servicing the meter, use only the replacement parts specified here.

Replacement parts and some accessories are shown in Figure 8 and listed in Table 9. Many more DMM accessories are available from Fluke. For a catalog, contact the nearest Fluke distributor.

To find out how to order parts or accessories use the telephone numbers or addresses listed under "Contacting Fluke".

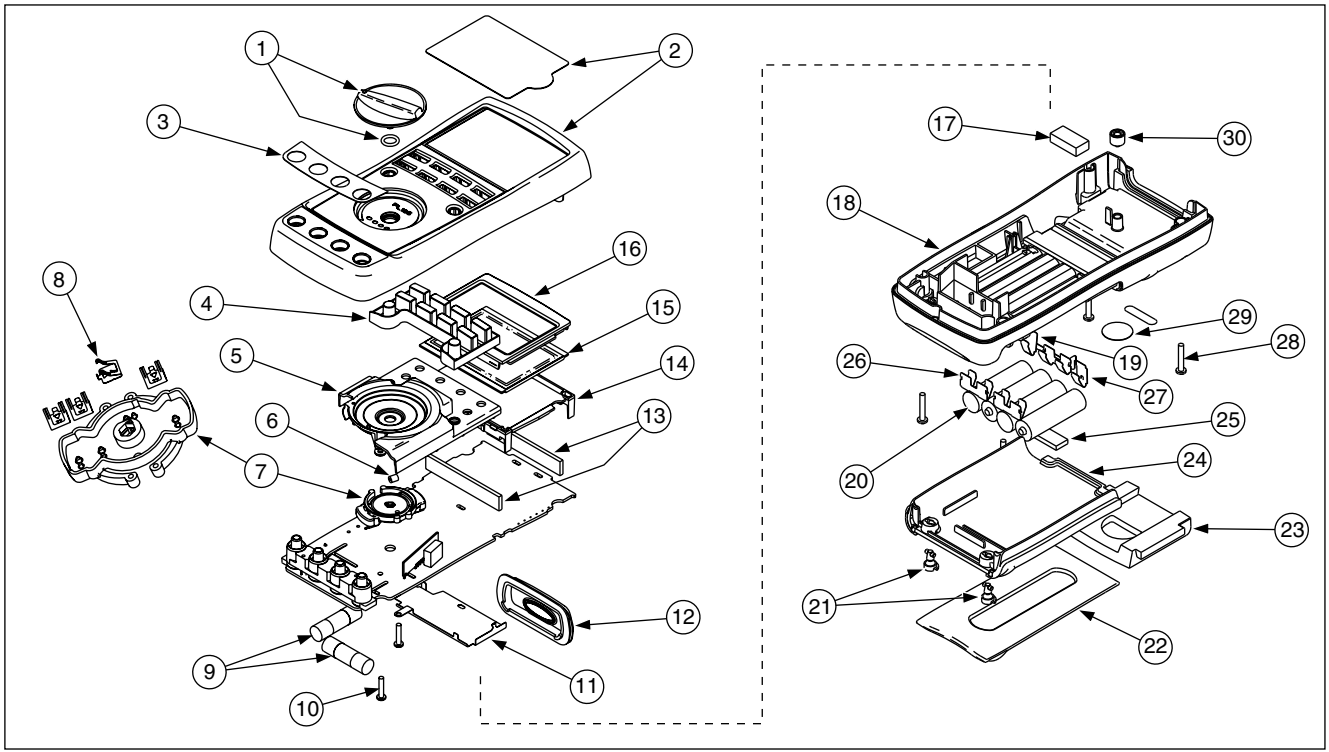

anw005f.eps

Figure 8. Replacement Parts

Table 9. Replacement Parts

Item Number	Reference Designator	Description	Fluke PN or Model no.	Quantity
①	MP14	Knob Assembly	658440	1
②	MP1	Top Case with Lens Protector	1622855	1
③	MP8	Decal, Top Case	1623923	1
④	MP6	Keypad	1622951	1
⑤	MP5	Top Shield	1622924	1
⑥	MP47	Top Shield Contact	674853	1
⑦	MP4	Contact Housing	1622913	1
⑧	MP28-31	RSOB Contact	1567683	4
⑨	⚠ F1, F2	Fuse, 440 mA, 1000 V fast-blow	943121	2
⑩	H7,8	PCB Screw	832220	2
⑪	MP9	Bottom Shield	1675171	1
⑫	MP12	IR Lens	658697	1
⑬	MP40,41	LCD Connectors, Elastomeric	1641965	2
⑭	MP7	Backlight/Bracket	1622960	1
⑮	P1	LCD Display	1883431	1
⑯	MP3	Mask	1622881	1

Table 9. Replacement Parts (continued)

Item Number	Reference Designator	Description	Fluke PN or Model no.	Quantity
(17)	MP50	Shock Absorber	878983	1
(18)	MP11	Bottom Case	659042	1
(19)	MP20	Battery Contact, Negative	658382	1
(20)	BT1-4	Battery, 1.5 V, 0-15 mA, AA Alkaline	376756	4
(21)	H1-2	Fasteners, Battery/Fuse Access Door	948609	2
(22)	MP13	Tilt-Stand	659026	1
(23)	MP15	Accessory Mount with Probe Holders	658424	1
(24)	MP2	Access Door, Battery/Fuse	1622870	1
(25)	MP46	Shock Absorber	674850	1
(26)	MP16-18	Battery Contacts Dual	666435	3
(27)	MP19	Battery Contact, Positive	666438	1
(28)	H3-6	Case Screws	1558745	4
(29)	MP21	Calibration Label	948674	1
(30)	MP22	Calibration Keypad	658689	1
-	Not shown	TL71 Test Leads	1274382	1 (set of 2)
-	Not shown	AC72 Alligator Clips	1670095	1 (set of 2)
-	Not shown	789 Product Overview	1627890	1
-	Not shown	CD-ROM (Contains Users Manual)	1636493	1

Specifications

All specifications apply from +18 °C to +28 °C unless stated otherwise.

All specifications assume a 5-minute warm-up period.

The standard specification interval is 1 year.

Note

"Counts" refers to the number of increments or decrements of the least significant digit.

DC Volts Measurement

Range (V dc)	Resolution	Accuracy, ±(% of Reading + Counts)
4.000	0.001 V	0.1 % + 1
40.00	0.01 V	0.1 % + 1
400.0	0.1 V	0.1 % + 1
1000	1 V	0.1 % + 1
Input impedance: 10 MΩ (nominal), < 100 pF *Normal mode rejection ratio: > 60 dB at 50 Hz or 60 Hz* *Common mode rejection ratio: > 120 dB at dc, 50 Hz, or 60 Hz* *Overvoltage protection: 1000 V*		

DC Millivolts Measurement

Range (mV dc)	Resolution	Accuracy, ±(% of Reading + Counts)
400.0	0. 1 mV	0.1 % + 2

AC Volts Measurement

Range (ac)	Resolution	Accuracy, ±(% of Reading + Counts)		
		50 Hz to 60 Hz	45 Hz to 200 Hz	200 Hz to 500 Hz
400.0 mV	0.1 mV	0.7 % + 4	1.2 % + 4	7.0 % + 4
4.000 V	0.001 V	0.7 % + 2	1.2 % + 4	7.0 % + 4
40.00 V	0.01 V	0.7 % + 2	1.2 % + 4	7.0 % + 4
400.0 V	0.1 V	0.7 % + 2	1.2 % + 4	7.0 % + 4
1000 V	1 V	0.7 % + 2	1.2 % + 4	7.0 % + 4

Specifications are valid from 5 % to 100 % of amplitude range.
AC conversion: true rms
Maximum crest factor: 3 (between 50 and 60 Hz)
For non-sinusoidal waveforms, add ±(2 % reading + 2 % f.s.) typical
Input impedance: 10 MΩ (nominal), < 100 pF, ac-coupled
Common mode rejection ratio: > 60 dB at dc, 50 Hz, or 60 Hz

AC Current Measurement

Range 45 Hz to 2 kHz	Resolution	Accuracy, ±(% of Reading + Counts)	Typical Burden Voltage
1.000 A (Note)	0.001 A	1 % + 2	1.5 V/A

Note: 440 mA continuous, 1 A 30 seconds maximum

Specifications are valid from 5 % to 100 % of amplitude range.
AC conversion: true rms
Maximum crest factor: 3 (between 50 and 60 Hz)
For non-sinusoidal waveforms, add ± (2 % reading + 2 % f.s.) typical
Overload protection 440 mA, 1000 V fast-blow fuse

DC Current Measurement

Range	Resolution	Accuracy, ±(% of Reading + Counts)	Typical Burden Voltage
30.000 mA	0.001 mA	0.05 % + 2	14 mV/mA
1.000 A (Note)	0.001 A	0.2 % + 2	1.5 V/A
Note: 440 mA continuous, 1 A 30 seconds maximum *Overload protection: 440 mA, 1000 V fast-blow fuse*			

Ohms Measurement

Range	Resolution	Measurement Current	Accuracy, ±(% of Reading + Counts)
400.0 Ω	0. 1 Ω	220 µA	0.2 % + 2
4.000 kΩ	0.001 kΩ	60 µA	0.2 % + 1
40.00 kΩ	0.01 kΩ	6.0 µA	0.2 % + 1
400.0 kΩ	0.1 kΩ	600 nA	0.2 % + 1
4.000 MΩ	0.001 MΩ	220 nA	0.35 % + 3
40.00 MΩ	0.01 MΩ	22 nA	2.5 % + 3
Overload protection: 1000 V *Open circuit voltage: < 3.9 V*			

Frequency Counter Accuracy

Range	Resolution	Accuracy, ±(% of Reading + Counts)
199.99 Hz	0.01 Hz	0.005 % + 1
1999.9 Hz	0.1 Hz	0.005 % + 1
19.999 kHz	0.001 kHz	0.005 % + 1
Display updates 3 times/second at > 10 Hz		

Frequency Counter Sensitivity

Input Range	Minimum Sensitivity (rms Sinewave) 5 Hz to 5 kHz*	
	AC	DC (approximate trigger level 5 % of full scale)
400 mV	150 mV (50 Hz to 5 kHz)	150 mV
4 V	1 V	1 V
40 V	4 V	4 V
400 V	40 V	40 V
1000 V	400 V	400 V
* Usable 0.5 Hz to 20 kHz with reduced sensitivity. *10^6 VHz max*		

Diode Test and Continuity Test

Diode test indication: Displays voltage drop across device, 2.0 V full scale. Nominal test current 0.2 mA at 0.6 V. Accuracy ±(2 % + 1 count).

Continuity test indication: continuous audible tone for test resistance < 100 Ω

Open circuit voltage: < 2.9 V

Short circuit current: 220 µA typical

Overload protection: 1000 V rms

Loop Power Supply

Voltage: 24 V, Short Circuit protected

DC Current Output

Source Mode:

Span: 0 mA or 4 mA to 20 mA, with overrange to 24 mA

Accuracy: 0.05 % of span[1]

Compliance voltage: 28 V with battery voltage >~4.5 V

Simulate Mode:

Span: 0 mA or 4 mA to 20 mA, with overrange to 24 mA

Accuracy: 0.05 % of span[1]

Loop voltage: 24 V nominal, 48 V maximum, 15 V minimum

Compliance voltage: 21 V for 24 V supply

Burden voltage: < 3 V

General Specifications

Maximum voltage applied between any jack and earth ground: 1000 V

Storage temperature: -40 °C to 60 °C

Operating temperature: -20 °C to 55 °C

Operating altitude: 2000 meters maximum

Temperature coefficient: 0.05 x specified accuracy per °C for temperatures < 18 °C or > 28 °C

[1]0.1 x specified accuracy per °C for temperatures < 18 °C or > 28 °C

Accuracy adders for use in RF Fields: In an RF field of 3 V/m, change the accuracy specifications as follows:

For AC Volts Measurement, add 0.25 % of range
For DC Current Measurement, 30.000 mA range, add 0.14 % or range
For DC Current Output, add 0.32 % of span
Accuracy for all meter functions is not specified in RF fields > 3 V/m.

Relative humidity: 95 % up to 30 °C, 75 % up to 40 °C, 45 % up to 50 °C, and 35 % up to 55 °C

Vibration: Random 2g, 5 to 500 Hz

Shock: 1 meter drop test

Safety: The Meter complies with, EN61010-1:2001, ANSI/ISA S82.01-2004, CAN/CSA C22.2 No. 1010-1:2004, UL61010-1, Measurement Category III, 1000V, Pollution Degree 2 and Measurement Category IV, 600V, Pollution Degree 2.

Certifications: , To 61010-1 2nd Edition, , N10140

Power requirements: Four AA batteries (alkaline recommended)

Size: 10.0 cm X 20.3 cm X 5.0 cm (3.94 in X 8.00 in X 1.97 in)

Weight: 610 g (1.6 lbs)