FLUKE ®

714B
TC Calibrator

Quick Reference Guide

⚠⚠ **Warning**

To prevent possible electrical shock, fire, or personal injury, read the "714B Safety Sheet" before you use this Product.

Go to **www.fluke.com** to register your product, download manuals, and find more information.

Magnetic Hanger

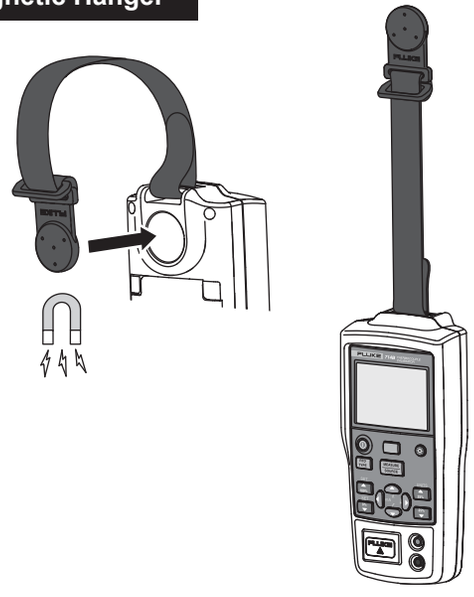

Measure — mA Measurement

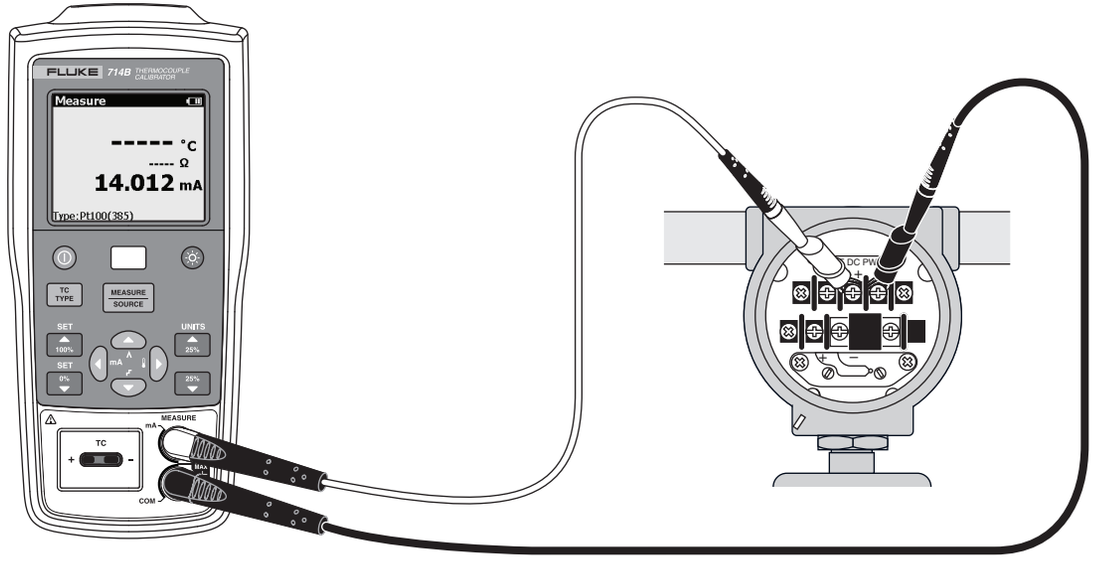

TC Measure — Temperature with TC

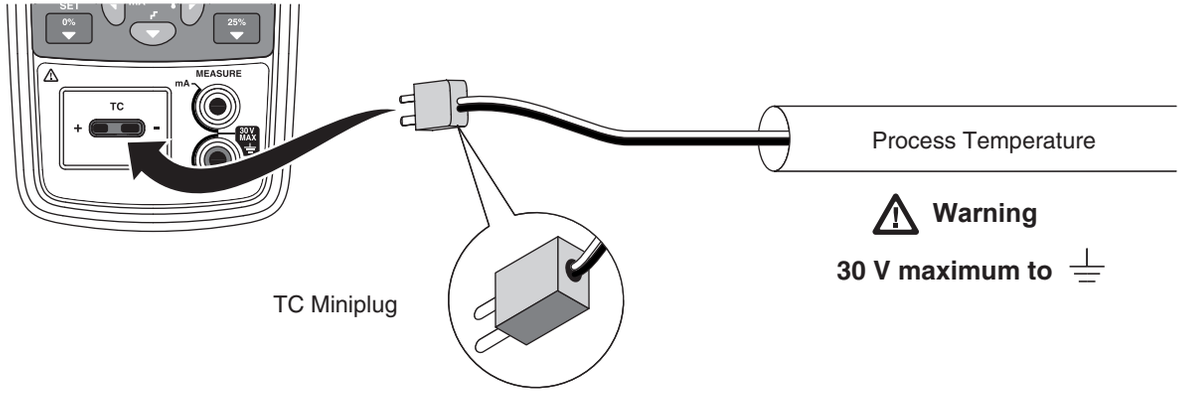

TC Type

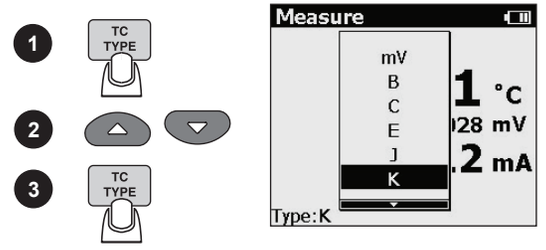

Settings

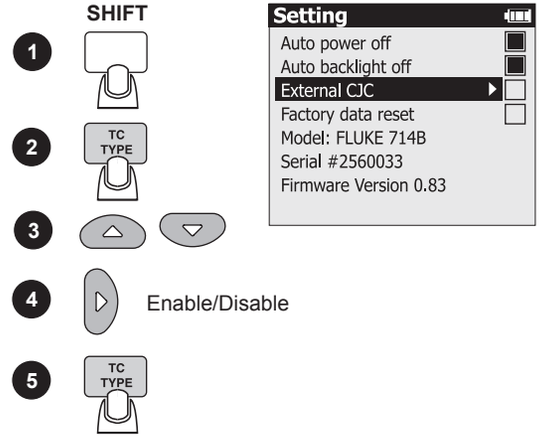

Units

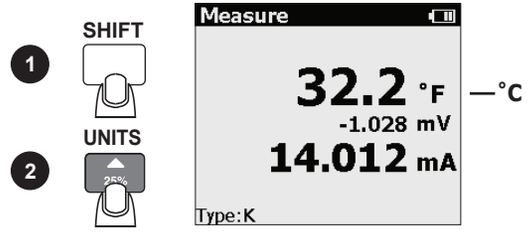

PN 4285039 December 2013, Rev. 1, 3/15
© 2013-2015 Fluke Corporation. All rights reserved.
All product names are trademarks of their respective companies.

Source

Simulate Thermocouple

SOURCE

1. MEASURE / SOURCE
2. TC TYPE
3. ▲ ▼
2. TC TYPE

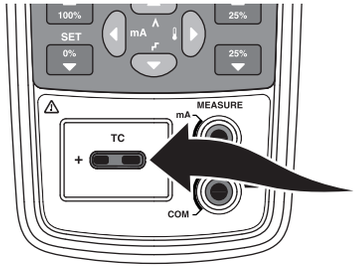

TC Miniplug

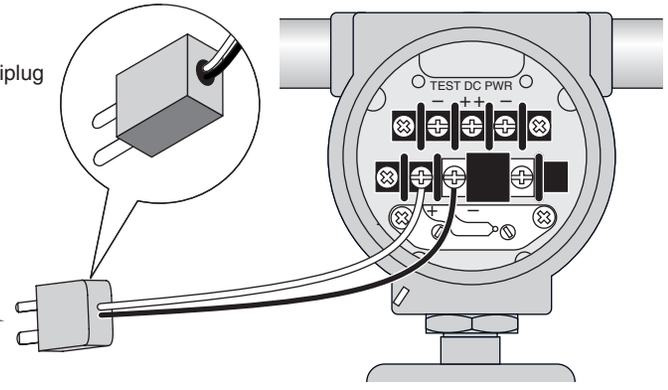

Set TC Value

SOURCE

1. MEASURE / SOURCE
2. ▲ ▼
3. ◀ ▶

9 8 7 6 5 4 3 2 1

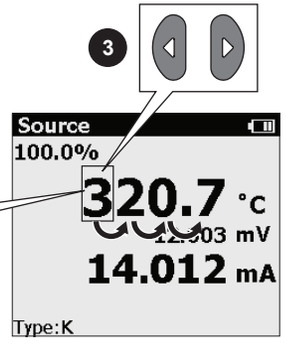

Contrast

MEASURE

1. MEASURE / SOURCE
2. ◀ ▶

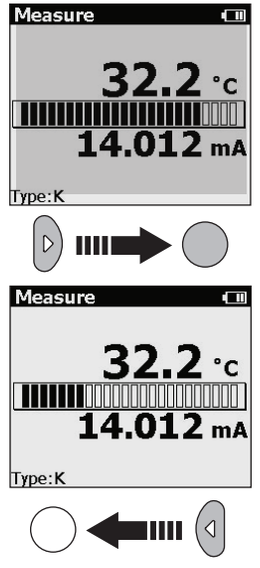

0%

A

SOURCE

1. MEASURE / SOURCE
2. SHIFT
3. 0% ▼

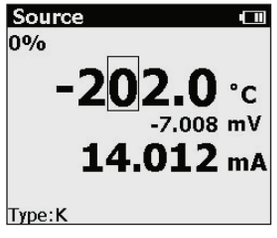

0% ▲ 25% ▲ 25% ▼ 100% Linearity or Span Test

C

0% — OR — ▲ 25% | 25% ▼ | ▲ 100%

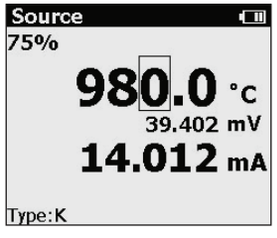

100%

B

SOURCE

1. MEASURE / SOURCE
2. SHIFT
3. 100% ▲

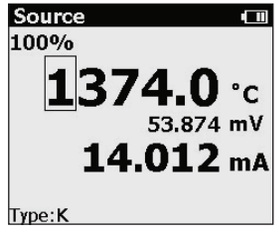

∧ Ramp or Step

D

SOURCE

1. MEASURE / SOURCE
2. SHIFT
3. ∧ Ramp / ▼ Step

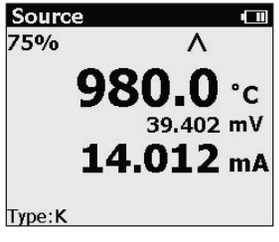

mA / Scale mA Channel to Temperature

1. SHIFT
2. ◀ ▶
— OR —
SHIFT
3. ◀ ▶
4. mA ◀ ▶

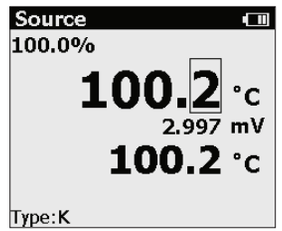

Note:

Temperature at 4 mA =
Span check 0 %
Temperature at 20 mA =
Span check 100 %

Battery

