FLUKE

233

True-rms Remote Display Digital Multimeter

Quick Reference Guide

⚠⚠ Warning

To prevent possible electrical shock, fire, or personal injury, read the "233 Safety Information" before you use this Product.

Go to www.fluke.com to register your product and find more information.

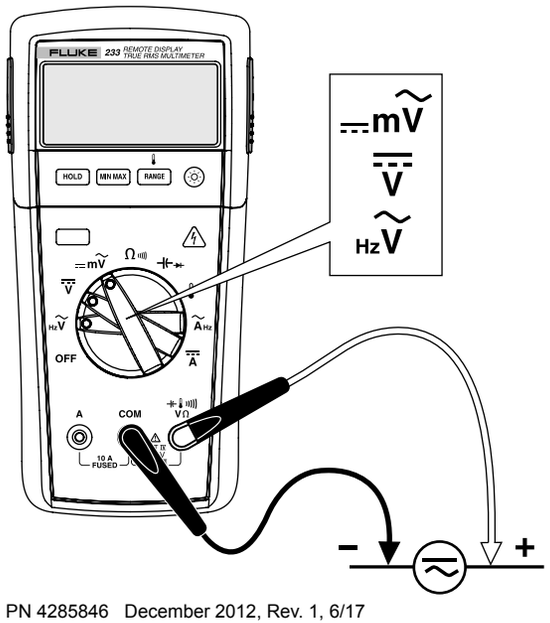

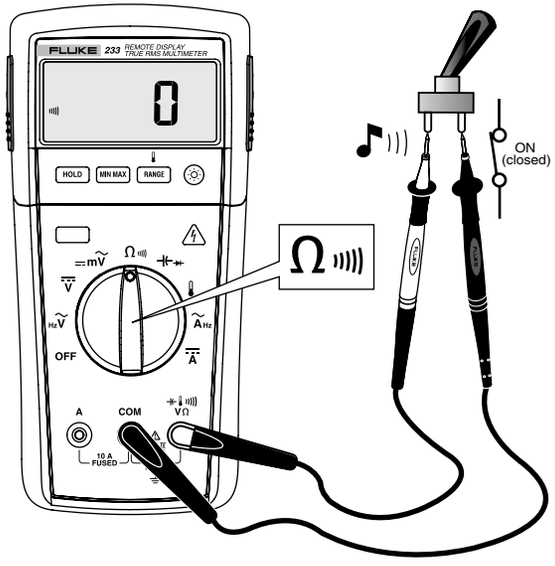

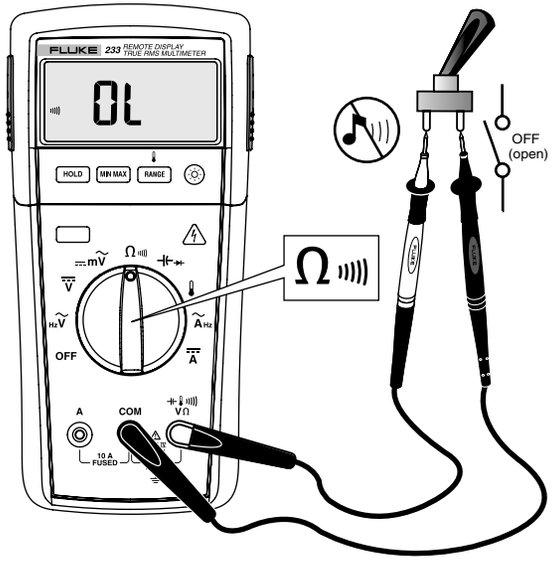

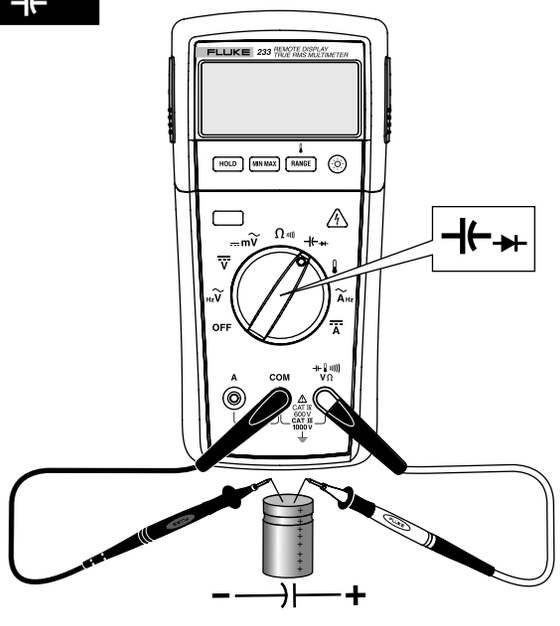

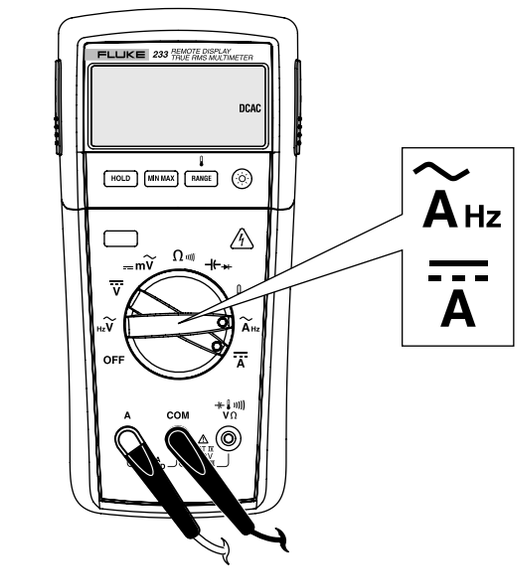

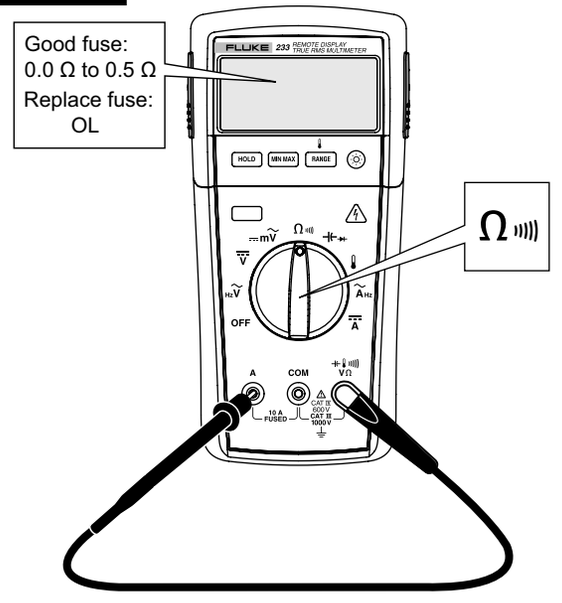

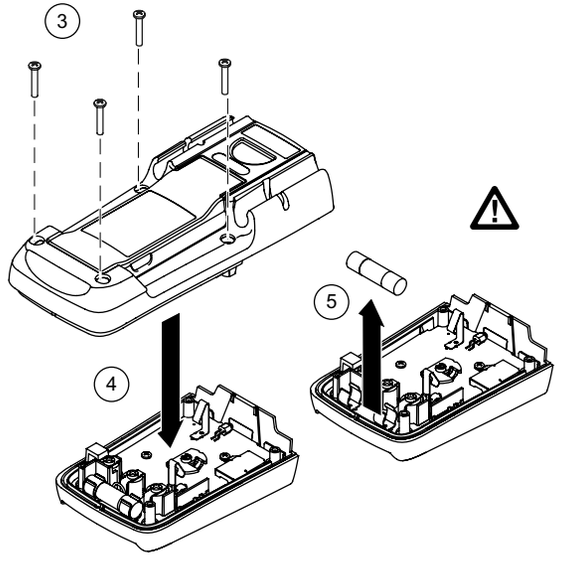

PN 4285846 December 2012, Rev. 1, 6/17

© 2012-2017 Fluke Corporation. All rights reserved. All product names are trademarks of their respective companies.

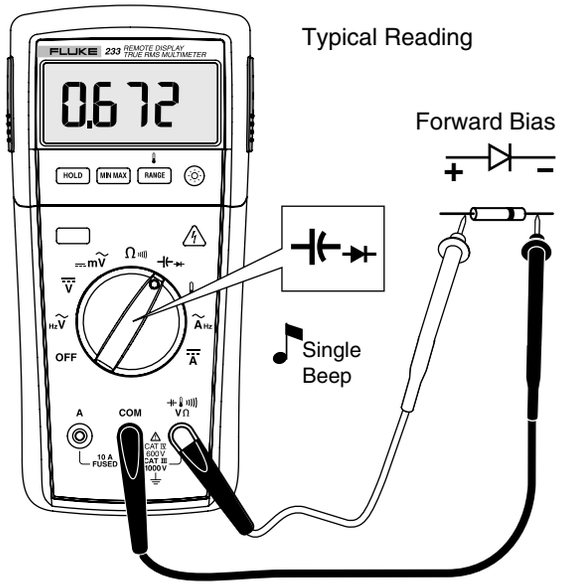

Typical Reading

Forward Bias

+ –

Single Beep

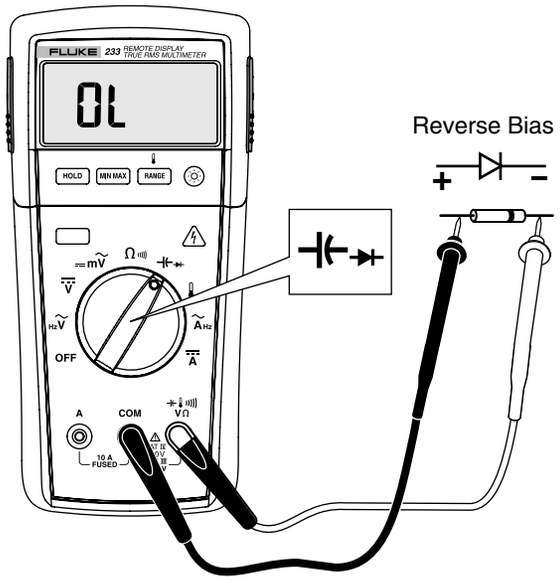

Reverse Bias

+ –

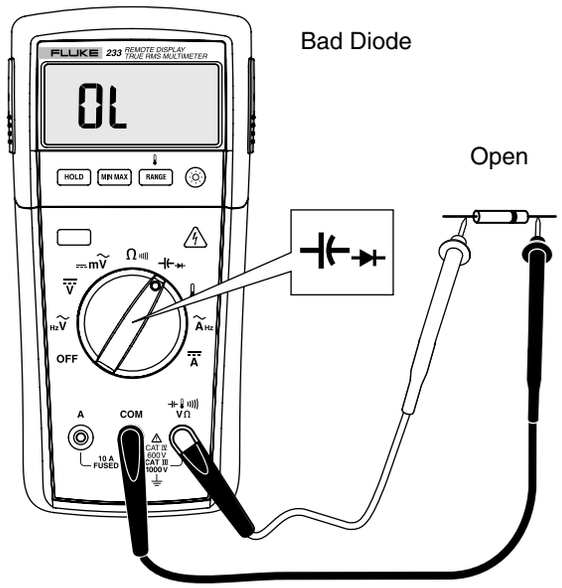

Bad Diode

Open

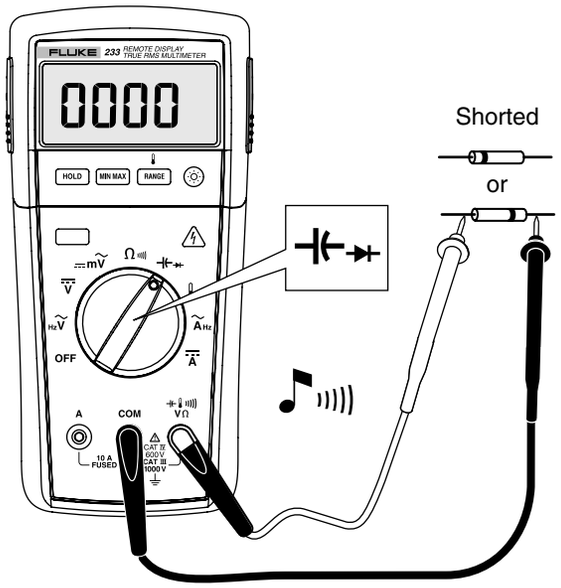

Shorted

or

Remote Display

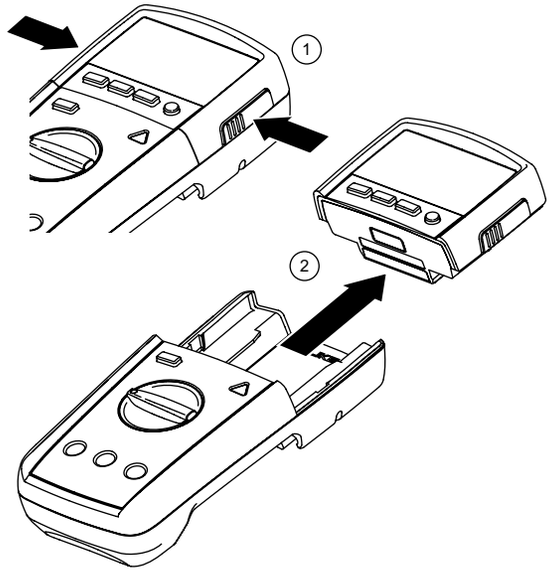

ToolPak

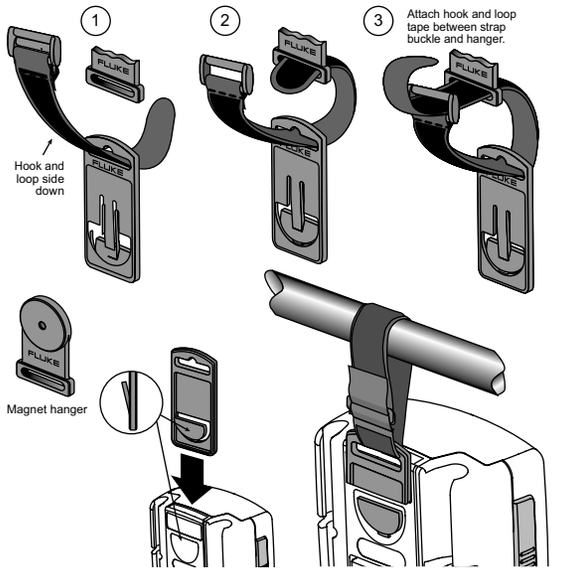

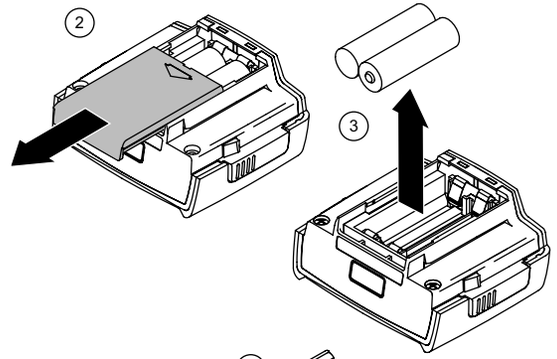

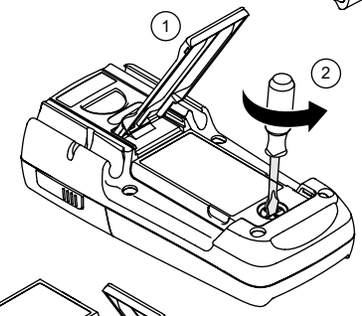

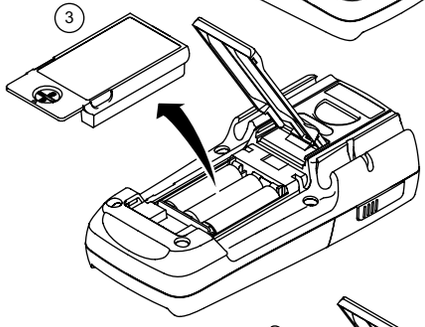

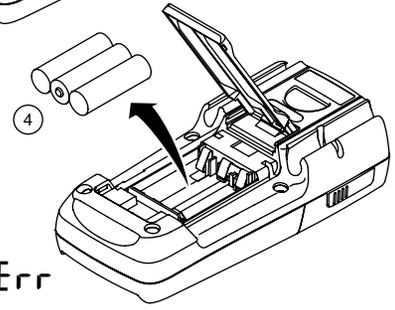

Ignore rF Err