FLUKE networks

Versiv™ Series

Cabling Certification Product Family

Technical Reference Handbook

2/2018, Rev. 14, 2/2025
© 2018-2025 Fluke Corporation
All product names are trademarks of their respective companies.

LIMITED WARRANTY AND LIMITATION OF LIABILITY

Each Fluke Networks product is warranted to be free from defects in material and workmanship under normal use and service unless stated otherwise herein. The warranty period for the mainframe is one year and begins on the date of purchase. Parts, accessories, product repairs and services are warranted for 90 days, unless otherwise stated. Ni-Cad, Ni-MH and Li-Ion batteries, cables or other peripherals are all considered parts or accessories. The warranty extends only to the original buyer or end user customer of a Fluke Networks authorized reseller, and does not apply to any product which, in Fluke Networks' opinion, has been misused, abused, altered, neglected, contaminated, or damaged by accident or abnormal conditions of operation or handling. Fluke Networks warrants that software will operate substantially in accordance with its functional specifications for 90 days and that it has been properly recorded on non-defective media. Fluke Networks does not warrant that software will be error free or operate without interruption.

Fluke Networks authorized resellers shall extend this warranty on new and unused products to end-user customers only but have no authority to extend a greater or different warranty on behalf of Fluke Networks. Warranty support is available only if product is purchased through a Fluke Networks authorized sales outlet or Buyer has paid the applicable international price. To the extent permitted by law, Fluke Networks reserves the right to invoice Buyer for repair/replacement when a product purchased in one country is submitted for repair in another country.

For a list of authorized resellers, visit **www.flukenetworks.com/wheretobuy**.

Fluke Networks warranty obligation is limited, at Fluke Networks option, to refund of the purchase price, free of charge repair, or replacement of a defective product which is returned to a Fluke Networks authorized service center within the warranty period.

To obtain warranty service, contact your nearest Fluke Networks authorized service center to obtain return authorization information, then send the product to that service center, with a description of the difficulty, postage and insurance prepaid (FOB destination). Fluke Networks assumes no risk for damage in transit. Following warranty repair, the product will be returned to Buyer, transportation prepaid (FOB destination). If Fluke Networks determines that failure was caused by neglect, misuse, contamination, alteration, accident or abnormal condition of operation or handling, or normal wear and tear of mechanical components, Fluke Networks will provide an estimate of repair costs and obtain authorization before commencing the work. Following repair, the product will be returned to the Buyer transportation prepaid and the Buyer will be billed for the repair and return transportation charges (FOB Shipping point).

THIS WARRANTY IS BUYER'S SOLE AND EXCLUSIVE REMEDY AND IS IN LIEU OF ALL OTHER WARRANTIES, EXPRESS OR IMPLIED, INCLUDING BUT NOT LIMITED TO ANY IMPLIED WARRANTY OF MERCHANTABILITY OR FITNESS FOR A PARTICULAR PURPOSE. FLUKE NETWORKS SHALL NOT BE LIABLE FOR ANY SPECIAL, INDIRECT, INCIDENTAL OR CONSEQUENTIAL DAMAGES OR LOSSES, INCLUDING LOSS OF DATA, ARISING FROM ANY CAUSE OR THEORY.

Since some countries or states do not allow limitation of the term of an implied warranty, or exclusion or limitation of incidental or consequential damages, the limitations and exclusions of this warranty may not apply to every buyer. If any provision of this Warranty is held invalid or unenforceable by a court or other decision-maker of competent jurisdiction, such holding will not affect the validity or enforceability of any other provision.

4/15

Fluke Networks
6920 Seaway Blvd
Everett, WA 98203
USA

Contents

Chapter 1 Get Acquainted

Overview of Features 1
Versiv 2 Compatibility 2
Contact Fluke Networks 2
Register Your Product 3
Additional Resources 3
Supplements and Updated Manuals 3
Symbols 4
Safety Information 5
- For the Main Tester 5
- For DSX Modules and Twisted Pair Adapters 8
- For CertiFiber Pro OLTS Modules 9
- For OptiFiber Pro OTDR Modules 10
- For FiberInspector Pro Video Probes and Their Verisv Modules 12

Main Unit Connectors, Keys, and LEDs 13
Main Tester as a Remote 13
AC Adapter and Battery 18
- Charge the Battery 18
- Check the Battery Status 20

Verify Operation 23
How to Use the Touchscreen 23
The HOME Screen 26
How to Enter Text 30
Set User Preferences 32

Language 32
Date and Time Settings and Formats 32
Number Format 33
Units for Length Measurements 33
Power-Down and Backlight Timeout Periods 33
Audible Tone 34
Power Line Frequency 34
Display Brightness 35
Import User Preferences from a File 35
How to Install a Strap 35
How to Remove or Install a Module 36
About LinkWare Applications 38
LinkWare PC Cable Test Management Software ... 38
The LinkWare Live Web Application 38
LinkWare Stats 38

Chapter 2 Get Started

Tutorial: Certify Twisted Pair Cabling 39
Tutorial: Certify Fiber Optic Cabling 45
Tutorial: Do a Bi-directional SmartLoop Test 54
Buttons to Do Tests and Save Results 63
Options for Cable IDs 65
Automatic Increment Function for Cable IDs 66
Auto Save Function 67
Tutorial: Make a Set of Sequential Cable IDs 67
About Projects 69
About LinkWare Live 69

Chapter 3 Certify Twisted Pair Cabling

Overview of the DSX CableAnalyzer Modules 71
DSX CableAnalyzer Connectors, Keys, and LEDs 72
About Link Interface Adapters 76
How to Prevent Damage to the Adapter Cables 77
Adapters for DSX-8000 and DSX-5000 Modules 78
The DSX CableAnalyzer Home Screen 79
Make Sure Your Tester is Ready to Certify Twisted Pair Cabling 82
Set the Reference 83
Settings for Twisted Pair Tests 84
How to Do an Autotest 90
"Bad Patch Cord" Message 96
How to Certify Patch Cords 96
How to Certify Modular Plug Terminated Links 97
Twisted Pair Autotest Results 99
Automatic Diagnostics 100
PASS*/FAIL* Results 101
WIRE MAP Tab 102
PERFORMANCE Tab 107
Scalar Results 109
Length, Propagation Delay, and Delay Skew....109
Loop Resistance 112
Continuous Tests 114
Frequency-Domain Results 115
How to Save Frequency-Domain Results as a Plot or a Table 115
Insertion Loss 120

Return Loss 121
Impedance 124
NEXT (Near-End Crosstalk) 126
PS NEXT (Power Sum Near End Crosstalk) 127
ACR-N (Attenuation to Crosstalk Ratio at the Near End) 129
PS ACR-N (Power Sum Attenuation to Crosstalk Ratio, Near End) 131
ACR-F (Attenuation to Crosstalk Ratio, Far End) 133
PS ACR-F 136
Balance Measurements 137
Differential and Common-Mode Signals 137
Effects of Unbalanced Impedance in a Wire Pair 137
Balance Measurements Available 139
Resistance Unbalance 140
Resistance Unbalance within Pairs (PAIR UBL) 140
Resistance Unbalance Between Pairs (P2P UBL) 144
CMRL (Common-Mode Return Loss) 146
CDNEXT (Common-Mode to Differential-Mode Near-End Crosstalk) 148
TCL (Transverse Conversion Loss) 150
ELTCTL (Equal Level Transverse Conversion Transfer Loss) 152
DIAGNOSTIC and FAULT INFO Tabs 153
About dB Rules 153
3 dB Rule 155
4 dB Rule 155
12 dB Rule 155

15 dB Rule 155
67 dB Rule for ACR-F and PS ACR-F 156
70 dB Rule for ACR-F and PS ACR-F 156
75 dB Rule for ACR-F and PS ACR-F 156
How to Use the Tone Generator 158
How to Use the Talk Function 160
Long-Range Communication Mode (DSX-5000) 161
About the AxTalk Analyzer Kit 161

Chapter 4 Test Twisted Pair Through a PoE Device (DSX-5000)

How to Turn On the AC Wire Map Test 163
When to Keep the AC Wire Map Test Off 164
How to Do an Autotest Through a PoE Device 164
AC Wire Map Results 166

Chapter 5 Certify Coaxial Cabling

Set the Reference for Coaxial Tests 169
Settings for Coaxial Tests 171
How to Do an Autotest 173
Coaxial Autotest Results 176
Length and Propagation Delay 178
Resistance 179
Impedance 180
Insertion Loss 182
About Splitters 183
Tests Without a Remote 184
Continuous Tests 187

Chapter 6 Diagnose Copper Test Failures

Fault Information 189
Types and Order of Faults Reported 190
When the FAULT INFO Tab Does Not Show 191
Causes of Twisted Pair Test Failures 191
Causes of Coaxial Test Failures 196
The HDTDR Analyzer 198
The HDTDX Analyzer 204
How to Use the Measurement Cursor on the HDTDR and HDTDX Plot 208

Chapter 7 Clean Fiber Endfaces

Always Clean Endfaces Before Tests 211
How to Use a Fluke Networks Quick Clean Cleaner 214
How to Use Wipes, Swabs, and Solvent 217
To Clean Bulkhead Connectors 217
To Clean the Optical Connectors on the Modules 218
To Clean Fiber Adapters 218
To Clean Connector Ends 219

Chapter 8 FiberInspector™ Pro Tests

Features of the FI-1000 222
Features of the FI-3000 223
Charge the FI-3000 Battery 225
Probe and Tip Selection 226
FI-1000 Probe Setup 227
FI-3000 Probe Setup 228
MPO Tip Attachment 229
MPO Key Position 230

Features of the Tester 233
Home Screen for FiberInspector Pro Tests 235
Set up a FiberInspector Test 239
Do a FiberInspector Test 241
Use the Probe When You Set a Reference 244
View Endfaces 244
Image Tab 246
Defects Tab 249
Fiber Tests with Two Main Testers 250

Chapter 9 Certify Fiber Cabling

Overview of the CertiFiber Pro Optical Loss Test Set Modules 251
CertiFiber Pro Connectors, Keys, and LEDs 252
How to Remove and Install the Connector Adapters 258
The Home Screen for CertiFiber Pro Modules 260
Requirements for Reliable Fiber Test Results 263
About the Reference for Fiber Tests 264
When to Set the Reference 264
Good Reference Values 265
How to See the Reference Values 266
About Test Reference Cords and Mandrels 266
About the EF-TRC (Encircled-Flux Test Reference Cords) 267
About Standard Mandrels 268
About APC Connectors 269
Settings for Loss/Length Tests on Fiber 271
Loss/Length Settings for Limits that Calculate a Loss Limit 271

About 1 Jumper Reference Connections 278
Autotest in Smart Remote Mode 280
Fiber Tests with Two Main Testers 280
Autotest Results for Smart Remote Mode 286
Fiber IDs for Saved Results in Smart Remote Mode 291
How to Change Fiber IDs Before You Do Tests 291
How To Save Results with Non-Consecutive IDs 291
How to Swap the Input and Output IDs 291
Autotest in Loopback Mode 294
Autotest Results for Loopback Mode 299
Autotest in Far End Source Mode 301
Auto Wavelength Modes 301
Autotest Results for Far End Source Mode 308
Bi-directional Tests 311
How to Use the Talk Function 314

Chapter 10 The Power Meter and Light Source

How to Monitor Power and Loss 315
How to Control the Light Source 319
Use the Display to Control the Main Tester's Light Source 320
Use the Module's Button to Control the Light Source 320

Chapter 11 The OptiFiber Pro OTDR Module

Overview of the OTDR Module 323
OptiFiber Pro Connectors, Keys, and LEDs 324

How to Remove and Install the Connector Adapters 327
The Home Screen for OptiFiber Pro Modules 328
Settings for OTDR Tests 331
OTDR Settings for Limits that Calculate a Loss Limit 339
About Launch and Tail Cords 340
How To Compensate for Launch and Tail Cords 342
Methods of Launch Compensation 342
How to Set Up the Launch Compensation Function 343
How To Enter Lengths Manually 348
How To See the Launch Compensation Settings 349
About Virtual Launch and Tail Events 349
How to Prevent Damage to the Launch Cord Connectors 351
How to Hang the Launch Cords 352
OTDR Port Connection Quality 352
If the Gauge is Not in the Good Range 353
Port Connection Quality for SmartLoop Tests 353
“STOP” Button for Manual Tests 354
How to Do an OTDR Test 355
OTDR Results 359
EventMap 359
Event Table 364
OVERALL FIBER RESULTS Screens 374
EVENT DETAILS Screen 377
About Measurements that Show “<” and “>” 381
OTDR Trace 382

How to Use the Measurement Cursor on the OTDR Trace 384
How to Quickly Try Different OTDR Settings 387
How To Do Bi-directional Tests on Single Fibers 389
How To Do Bi-directional Tests for All IDs in a Set 390
Real Time Trace 392
How to Quickly Try Different OTDR Settings in Real Time Trace Mode 395
The SmartLoop Test 397
How To Do an Auto SmartLoop Test 399
Set Up SmartLoop Launch Compensation 399
Do the SmartLoop Test 401
SmartLoop Results 403
Bi-directional SmartLoop Tests 404
Why Do Bi-directional Tests? 404
When To Do Bi-directional Tests 405
How to Do a Bi-directional SmartLoop Test 406
Set Up SmartLoop Launch Compensation 406
Do the SmartLoop Test 407
Averaged Bi-directional Results 410
The FaultMap Test 413
How to Do the FaultMap Test 414
FaultMap Screen 417

Chapter 12 The OptiFiber Pro HDR OTDR Module

Overview of the HDR OTDR Module 419
OptiFiber Pro HDR Connectors, Keys, and LEDs 420
How to Remove and Install the Connector Adapters 423

The Home Screen for OptiFiber Pro HDR OTDR Modules 425
About PON OTDR Tests 428
Settings for HDR OTDR Tests 428
To set up an OTDR test 429
OTDR Settings for Limits that Calculate a Loss Limit 439
About Launch and Tail Cords for OSP Links 440
OTDR Port Connection Quality 441
If the Gauge is Not in the Good Range 441
Port Connection Quality for SmartLoop Tests 442
"STOP" Button for Manual Tests 442
How to Do an HDR OTDR Test 444
HDR OTDR Results 449
EventMap 449
Event Table 454
OVERALL FIBER RESULTS Screens 465
EVENT DETAILS Screen 468
About Measurements that Show "<" and ">" 470
HDR OTDR Trace 470
How to Quickly Change OTDR Settings After a Test 472
How to Use the Measurement Cursor on the OTDR Trace 474
How To Do Bi-Directional Tests on Single Fibers 477
How To Do Bi-directional Tests for All IDs in a Set 478
Real Time Trace 480
How to Quickly Try Different HDR OTDR Settings in Real Time Trace Mode 483

The FaultMap Test 485
How to Do the FaultMap Test 486
FaultMap Screen 489
The SmartLoop Test 491
How To Do an Auto SmartLoop Test 493
Set Up SmartLoop Launch Compensation 493
Do the SmartLoop Test 495
SmartLoop Results 497
Bi-Directional SmartLoop Tests 498
Why Do Bi-Directional Tests? 498
When To Do Bi-Directional Tests 499
How to Do a Bi-Directional SmartLoop Test 500
Set Up SmartLoop Launch Compensation 500
Do the SmartLoop Test 501
Averaged Bi-Directional Results 504

Chapter 13 OTDR Span and Event Editing Functions

Overview of Features 507
How to Edit a Loss Event 507
PASS/FAIL Result for Edited Events 508
Other Options for Editing Events 508
Editing Events in Bi-directional Results 510
How to Use the Span Function 511
When the Tester Will Not Use Your Span Settings 511
How to Define a Span 511
How to Do a Test with Your Span Settings 512
Bi-directional Tests with Span Settings 516
How to Remove the Span Definition 517
How to Remove the Span Definition from a Test Result 517

Chapter 14 The Visual Fault Locator

Visual Fault Locator Applications 519
How to Use the VFL 520

Chapter 15 Diagnose Problems in Fiber Links

Common Causes of Problems in Fiber Links 523
Causes of Loss/Length Test Failures 524
Causes of OTDR Test Failures 526

Chapter 16 Manage Test Results

View Saved Results 531
How to Add a Result to a Saved Result 535
How to Replace a Saved Result that Failed 536
Delete, Rename, and Move Results 537
- Delete Results 537
- Rename Results 537
- Move Results to a Different Project 538

Manage Results on a Flash Drive 538
Upload Results to a PC 539
Memory Capacity 541
View the Memory Status 541
About LinkWare Live 542

Chapter 17 Use Projects

Why Use Projects? 543
Tutorial: Make a New Project 544
- About Project Names from LinkWare Live 547
  - To set up a twisted pair test for the project 548
  - To set up a fiber loss/length test for the project 549

To set up an OTDR test for the project 549
To see the CABLE ID SETUP screen 550
To make a cable ID set for tests on twisted pair cabling 551
To make a cable ID set for tests on fiber cabling 552
Tutorial: How to Use a Project for Tests with a CableAnalyzer Module 560
Tutorial: How to Use a Project for Tests with OptiFiber Pro and CertiFiber Pro Modules 563
How to Change Settings as You Use a Project 571
Change the ID 571
To use a different, unused ID from an ID set that has a first and last ID 571
To use an ID you used before 572
To use an ID that is not in an ID set that has a first and last ID 572
To change the ID when the set has only a next ID 574
To Change the Tests in a Project 574
To select a different test in the project 574
To add a test to a project 574
To include a fiber test in the % Tested value 575
To Change the Project 575
To save results in a different or new project 575
How to Make ID Sets 578
To make an ID set 579

If an ID Sequence is Invalid 580
To Make ID Sets with International Characters 581
About Next ID Sets 581
Import an ID Set into a Project 582
Delete an Imported ID Set 583
How to Manage Projects 583
View Results in a Project 583
Rename a Project 584
Copy a Project to Make a New Project 584
Delete a Project 584
Manage Projects on a Flash Drive 585
Copy Project Settings to Other Testers 586
About LinkWare Live 586

Chapter 18 Sync Projects with LinkWare™ Live

Sign Up for a LinkWare Live Account 587
How to See the Tester's MAC Address 588
Use LinkWare Live Through a Wired Ethernet Network 588
Use LinkWare Live Through a Wi-Fi Network 589
When You Cannot Sync a Deleted Project 593
About the Asset Management Service 593
Change the Network Settings 594
Settings for the Wired Port 594
Wi-Fi Settings 594
How to Add a Wi-Fi Access Point 595
Delete Wi-Fi Settings and Passwords 595
Regulatory Information for the Versiv 2 Wi-Fi Radio 595

Sign Your Tester Out of LinkWare Live 597
Sign In to LinkWare Live from a Desktop or Mobile Device 597
Import Projects from LinkWare Live into LinkWare PC 597
For More Information on LinkWare Live 597

Chapter 19 Custom Media and Test Limits

Make a Custom Copper Cable Type 599
Change the NVP 600
Set the NVP to a Specified Value 601
Find a Cable's Actual NVP 601
Reset the NVP to the Default Value 602
Make a Custom Outlet Configuration 602
Make a Custom Fiber Type 603
About the Index of Refraction 606
Make a Custom Fiber Test Limit 607
Select a Custom Fiber Type or a Custom Limit 612
Edit an Existing Custom Fiber Type or Test Limit 613
Delete a Custom Fiber Type or Test Limit 613

Chapter 20 Maintenance

Verify Operation 615
Clean the Tester 616
Clean the Video Probe 616
See Information About the Tester 617
Update the Software 619
About Versiv and Versiv 2 Update Files 619
Use a PC to Update the Software 620

Use an Updated Main Tester to Update Other Testers 621
Use LinkWare Live to Update the Software 623
Update the Software in a Module 623
Extend the Life of the Battery 624
Store the Tester 624
Remove the Battery 625
Replace the Tip on a DSX-PLA004 Connector 626
Traceable Calibration Period 627
If the Tester Does Not Operate as Usual 628
Before You Send a Main Tester to a Service Center 628
Options and Accessories 630

Chapter 21 Specifications

Environmental and Regulatory Specifications 631
Power 633
DSX-8000 CableAnalyzer Module Specifications 633
DSX-8000 Times for a Full, 2-Way Autotest 633
DSX-8000 Module: Tests and Frequencies Supported 634
Twisted Pair Cabling 634
Coaxial Cabling (optional DSX-CHA003 coaxial adapters required) 634
DSX-8000 Standard Link Interface Adapters 634
DSX-CHA804 Cat 8/Class I Channel Adapters 634
DSX-PLA804 Cat 8/Class I Permanent Link Adapters 634
DSX-8000 Measurement Accuracy 635
DSX-5000 CableAnalyzer Module Specifications 639
DSX-5000 Times for a Full, 2-Way Autotest 639

DSX-5000 Module: Tests and Frequencies Supported 640
Twisted Pair Cabling 640
Coaxial Cabling (optional DSX-CHA003 coaxial adapters required) 640
DSX-5000 Standard Link Interface Adapters 640
DSX-CHA004 Class E_A Channel Adapters 640
DSX-PLA004 Class E_A Permanent Link Adapters 640
DSX-5000 Long-Range Communication Mode 641
DSX-5000 Measurement Accuracy 641
DSX Series Module Specifications 645
DSX Series Adapter and Module Compatibility 645
Length of Twisted Pair Cabling 646
Propagation Delay 647
Delay Skew 647
DC Loop Resistance 647
DC Resistance Unbalance 648
HDTDX Analyzer Specifications for Cables <100 m (328 ft) 648
HDTDR Analyzer Specifications for Cables <100 m (328 ft) 648
Characteristic Impedance 648
Tone Generator 649
Input Protection 649
DSX-CHA003 Coaxial Adapter 650
CertiFiber Pro OLTS Module Specifications 651
CertiFiber Pro Power Meter Specifications 651
CertiFiber Pro OLTS Loss/Length Specifications 652
OptiFiber Pro OTDR Module Specifications 654

OptiFiber Pro DataCenter OTDR Specifications 657
OptiFiber Pro HDR OTDR Module Specifications 658
OptiFiber Pro HDR DataCenter OTDR Specifications 661
Visual Fault Locator 661
FI-1000 Video Probe 662
FI-3000/FI-3000-NW Video Probe 662
Traceable Calibration Period 664
Internal Memory Capacity for Test Results 665
USB Flash Drive 665
Serial Interfaces 665
RJ45 Connector on the Main Unit 665
Headset Jack 666
Display 666
Wi-Fi Connectivity 667
Versiv 667
Versiv 2 Wireless Radio 667
Weights 668
Dimensions 668

Appendix A Tests on Long Fiber Links with the OptiFiber Pro OTDR

Make a Custom Fiber Type, If Necessary 669
Use a Launch Cord of the Correct Type 669
Use a Launch Cord of the Correct Length 670
Use a Launch Cord that Has the Correct Connectors 670
Use the Correct Test Limit 671
For Tests on OSP Links 671

Appendix B Reference Method Names

Appendix C Reference Methods for Fiber Cabling

Introduction 675
1 Jumper Reference 676
2 Jumper Reference 678
3 Jumper Reference 680
Modified 1 Jumper Reference 682

Chapter 1: Get Acquainted

Overview of Features

The Versiv™ and Versiv 2 main and remote testers are rugged, hand-held instruments that you configure to certify, troubleshoot, and document copper and fiber optic cabling. The Versiv platform includes these features:

Note

Feature descriptions in the Versiv Series documentation apply to Versiv and Versiv 2 testers unless stated otherwise.

- Operates with DSX CableAnalyzer™ modules to certify twisted pair and coaxial cabling. See Chapters 3 and 5.
- Operates with CertiFiber® Pro Optical Loss Test Set (OLTS) modules to measure optical power loss and length on dual-fiber, multimode and single-mode cabling. See Chapter 9.
- Operates with OptiFiber® Pro OTDR modules to locate, identify, and measure reflective and loss events in multimode and single-mode fibers. See Chapter 11.
- Operates with OptiFiber Pro HDR modules to do tests on OSP (Outside Plant) installations that include optical splitters. See Chapter 12.
- The optional FI-1000 FiberInspector™, FI-3000, or FI-3000-NW FiberInspector™ Pro video probe lets you inspect the endfaces in fiber optic connectors.
- Gives a PASS or FAIL result based on a test limit that you specify.

- Taptive™ user interface lets you quickly navigate through different views of the results and see more information about cables.
- ProjX™ management system lets you set up projects to specify the types of tests and the cable IDs necessary for a job and monitor the progress and status of the job.
- You can connect the tester to a wired or Wi-Fi network and use the LinkWare™ Live web application to manage your projects from a desktop or mobile device.
- LinkWare PC software lets you upload test results to a PC and make professional-quality test reports.
- LinkWare Stats software makes browsable, graphical reports of cable test statistics.

Versiv 2 Compatibility

Versiv 2 mainframes do not support the OptiView XG Performance Test Remote or the OneTouch AT Network Assistant modules.

Contact Fluke Networks


www.flukenetworks.com/support


info@flukenetworks.com


1-800-283-5853, +1-425-446-5500


Fluke Networks
6920 Seaway Boulevard, MS 143F
Everett WA 98203 USA

Fluke Networks operates in more than 50 countries worldwide. For more contact information, go to our website.

Register Your Product

Registering your product with Fluke Networks gives you access to valuable information on product updates, troubleshooting tips, and other support services. If you purchased a Gold Support plan, registration also activates your plan.

To register your product, use LinkWare PC software.

Additional Resources

The Fluke Networks Knowledge Base answers common questions about Fluke Networks products and provides articles on cable testing techniques and technology.

To access the Knowledge Base, log on to **www.flukenetworks.com**, then click **SUPPORT** > **Knowledge Base**.

Supplements and Updated Manuals

If necessary, Fluke Networks will put a supplement for this manual, or an updated manual, on the Fluke Networks website. To see if a supplement or updated manual is available, log on to **www.flukenetworks.com**, click **SUPPORT** > **Manuals**, then select a product.

Symbols

Table 1 shows the symbols used on the tester or in this manual.

Table 1. Symbols

	Warning: Risk of fire, electric shock, or personal injury.
	Warning or Caution: Risk of damage or destruction to equipment or software. See explanations in the manuals.
	Consult the user documentation.
	Warning: Class 1 (OUTPUT port) and Class 2 (VFL port) lasers. Risk of eye damage from hazardous radiation.
	This product complies with the WEEE Directive marking requirements. The affixed label indicates that you must not discard this electrical/electronic product in domestic household waste. Product Category: With reference to the equipment types in the WEEE Directive Annex I, this product is classed as category 9 "Monitoring and Control Instrumentation" product. Do not dispose of this product as unsorted municipal waste. To return unwanted products, contact the manufacturer's web site shown on the product or your local sales office or distributor.
	This Product contains a lithium-ion battery. Do not mix with the solid waste stream. Spent batteries should be disposed of by a qualified recycler or hazardous materials handler per local regulations. Contact your authorized Fluke Service Center for recycling information.
	Complies with California Energy Commission (CEC) requirements for battery charger systems.
	Conformite Europeene. Conforms to requirements of European Union directives. Safety requirements for electrical equipment for measurement, control, and laboratory use.
	On/Off

Safety Information

For the Main Tester

⚠⚠Warning

To prevent possible fire, electric shock, or personal injury:

- **Read all safety information before you use the Product.**
- **Carefully read all instructions.**
- **Do not open the case. You cannot repair or replace parts in the case.**
- **Do not modify the Product.**
- **Use only replacement parts that are approved by Fluke Networks.**
- **Do not touch voltages > 30 V AC rms, 42 V AC peak, or 60 V DC.**
- **Do not use the Product around explosive gas, vapor, or in damp or wet environments.**
- **Charge the battery indoors.**
- **Use the Product only as specified, or the protection supplied by the Product can be compromised.**
- **Do not use and disable the Product if it is damaged.**
- **Do not use the Product if it operates incorrectly.**
- **Batteries contain hazardous chemicals that can cause burns or explode. If exposure to chemicals occurs, clean with water and get medical aid.**

- **Remove the batteries if the Product is not used for an extended period of time, or if stored in temperatures above 50 °C. If the batteries are not removed, battery leakage can damage the Product.**
- **Replace the rechargeable battery after 5 years of moderate use or 2 years of heavy use. Moderate use is defined as recharged twice a week. Heavy use is defined as discharged to cutoff and recharged daily.**
- **Disconnect the battery charger and move the Product or battery to a cool, non-flammable location if the rechargeable battery becomes hot (>50 °C, >122 °F) during the charge period.The battery door must be closed and locked before you operate the Product.**
- **The battery door must be closed and locked before you operate the Product.**
- **Repair the Product before use if the battery leaks.**
- **Recharge the batteries when the low battery indicator shows to prevent incorrect measurements.**
- **Turn off the Product and disconnect all test leads, patch cords, and cables before you replace the battery.**
- **Do not disassemble or crush battery cells and battery packs.**
- **Do not put battery cells and battery packs near heat or fire. Do not put in direct sunlight.**
- **Have an approved technician repair the Product.**
- **Use only AC adapters approved by Fluke Networks for use with the Product to supply power to the Product and charge the battery.**

⚠Caution

To prevent damage to the tester or cables under test and to prevent data loss:

- **To prevent unreliable test results, connect the ac adapter or recharge the battery as soon as the low battery indication appears.**
- **Keep modules attached to the testers to give protection to the module connectors.**
- **Do not remove the USB flash drive while the LED on the drive flashes. Doing so can corrupt the data on the drive.**
- **You can lose a USB flash drive, cause damage to it, or accidentally erase the contents of the drive. Thus, Fluke Networks recommends that you save no more than one day of test results on a flash drive or that you upload results to LinkWare Live.**

For DSX Modules and Twisted Pair Adapters

⚠⚠Warning

To prevent possible fire, electric shock, or personal injury:

- **Do not connect the tester to telephony inputs, systems, or equipment, including ISDN inputs. Doing so is a misapplication of this product, which can cause damage to the tester and make a possible shock hazard for the user.**
- **Always turn on the tester before you connect it to a link. Doing so activates the tester's input protection circuitry.**
- **Do not operate the Product with covers removed or the case open. Hazardous voltage exposure is possible.**
- **Remove the input signals before you clean the Product.**
- **Do not put metal objects into connectors.**

⚠Caution

To prevent damage to the tester or cables under test, to prevent data loss, and to make sure your test results are as accurate as possible:

- **Do not connect the tester to an active network. Doing so causes unreliable test results, can disrupt network operations, and can cause damage to the tester.**
- **Connect to the adapters only plugs that are made for Ethernet applications, such as RJ45, ARJ45, and Cat 7 plugs. Other types of plugs, such as RJ11 (telephone) plugs, can cause permanent damage to the jacks.**
- **To make sure your test results are as accurate as possible, do the reference procedure every 30 days. See "Set the Reference" on page 83.**

- **Do not operate portable transmitting devices, such as walkie-talkies and cell phones, during a cable test. Doing so can cause errors in test results.**
- **For permanent link adapters, do not twist, pull on, pinch, crush, or make kinks in the cables. See Figure 24 on page 77.**

For CertiFiber Pro OLTS Modules

⚠⚠Warning: Class 1 and Class 2 Laser Products

To prevent possible eye damage caused by hazardous radiation:

- **Do not look directly into optical connectors. Some optical equipment emits invisible radiation that can cause permanent damage to your eyes.**
- **Keep the module's OUTPUT ports covered with a dust cap or keep a test reference cord attached. The OUTPUT ports can emit radiation even when you do not do a test.**
- **When you inspect fiber endfaces, use only magnification devices that have the correct filters.**
- **Use the Product only as specified or hazardous laser radiation exposure can occur.**

⚠Caution

To prevent damage to the tester or cables under test and to prevent data loss:

- **Do not connect the tester to an active network. Doing so causes unreliable test results, can disrupt network operations, and can cause damage to the module's receiver.**
- **Use proper cleaning procedures to clean all fiber connectors before every use. Neglecting this step or using improper procedures can cause**

unreliable test results and may permanently damage the connectors. See Chapter 7.

- **Use a video probe to periodically inspect the module's optical connectors for scratches and other damage.**
- **Do not connect APC (angled physical contact) connectors to the output ports. An APC connector can damage the UPC fiber endface in the ports.**
- **To make sure your test results are as accurate as possible, do the reference procedure frequently. See "About the Reference for Fiber Tests" on page 264.**
- **Use only high-quality test reference cords that comply with the standards. See "About Test Reference Cords and Mandrels" on page 266**

For OptiFiber Pro OTDR Modules

⚠⚠Warning: Class 1 and Class 2 Laser Products

To prevent possible eye damage caused by hazardous radiation:

- **Do not look directly into optical connectors. Some optical equipment emits invisible radiation that can cause permanent damage to your eyes.**
- **Do not do any tests that activate the outputs on the tester unless a fiber is attached to the output.**
- **When you inspect fiber endfaces, use only magnification devices that have the correct filters.**
- **Use the Product only as specified or hazardous laser radiation exposure can occur.**

⚠Caution

To prevent damage to the tester or cables under test:

- **Do not connect the OTDR port to an optical source. Doing so can cause damage to the OTDR receiver.**
- **Do not connect the tester to an active network. Doing so causes unreliable test results, can disrupt network operations, and can cause damage to the OTDR receiver.**
- **Do not touch reflective surfaces (such as metal) to the end of a fiber cable connected to the OTDR when the OTDR is operating. An open fiber connector endface has about a 4% reflection. Holding a reflective surface near the connector endface can cause more than a 4% reflection, which can damage the photodetector in the OTDR.**
- **Do not connect APC (angled physical contact) connectors to the OptiFiber Pro OTDR ports. Do not connect PC or UPC connectors to the OptiFiber Pro HDR OTDR ports. Doing so can damage the port's endface.**
- **Use proper cleaning procedures to clean all fiber connectors before every use. Neglecting this step or using improper procedures can cause unreliable test results and may permanently damage the connectors. See Chapter 7.**
- **Use a video probe to periodically inspect the OTDR connectors for scratches and other damage.**
- **Read the instructions for splice machines before using the OTDR to monitor splicing procedures. The OTDR can interfere with the light injection detection techniques used by some splicers.**

For FiberInspector Pro Video Probes

⚠⚠Warning

To prevent possible electrical shock, fire, or personal injury and for safe operation of the Product:

- **Read all safety information before you use the Product.**
- **Carefully read all instructions.**
- **Do not alter the Product and use only as specified, or the protection supplied by the Product can be compromised.**
- **Do not use the Product if it operates incorrectly.**
- **Do not use the Product if it is altered or damaged.**
- **Disable the Product if it is damaged.**
- **Use only Fluke Network approved power adapters to supply power to the Product and charge the battery.**
- **Charge the battery indoors.**
- **If the Product gets hot, disconnect the battery charger and move the Product to a cool, non-flammable location.**
- **Replace the rechargeable battery after 5 years of moderate use or 2 years of heavy use. Moderate use is defined as recharged twice a week. Heavy use is defined as discharged to cutoff and recharged daily. To replace the battery, send the Product to an authorized Fluke Networks Service Center.**
- **Have an approved technician repair the Product.**
- **Do not open the case. You cannot repair or replace parts in the case.**

Main Unit Connectors, Keys, and LEDs

See Figure 1 on page 14.

For functions specific to modules, see these sections:

- "DSX CableAnalyzer Connectors, Keys, and LEDs" on page 72
- "CertiFiber Pro Connectors, Keys, and LEDs" on page 252
- "The OptiFiber Pro OTDR Module" on page 323

Main Tester as a Remote

You can use the main tester as a remote for twisted pair and coaxial cable tests with the DSX CableAnalyzer modules and loss/length tests with the CertiFiber Pro modules. When you do loss/length tests with main testers at both ends, you can use FiberInspector video probes with both testers for faster inspections of fiber endfaces.

To use a main tester as a remote

Tap **TOOLS** then tap **Main as Remote**.

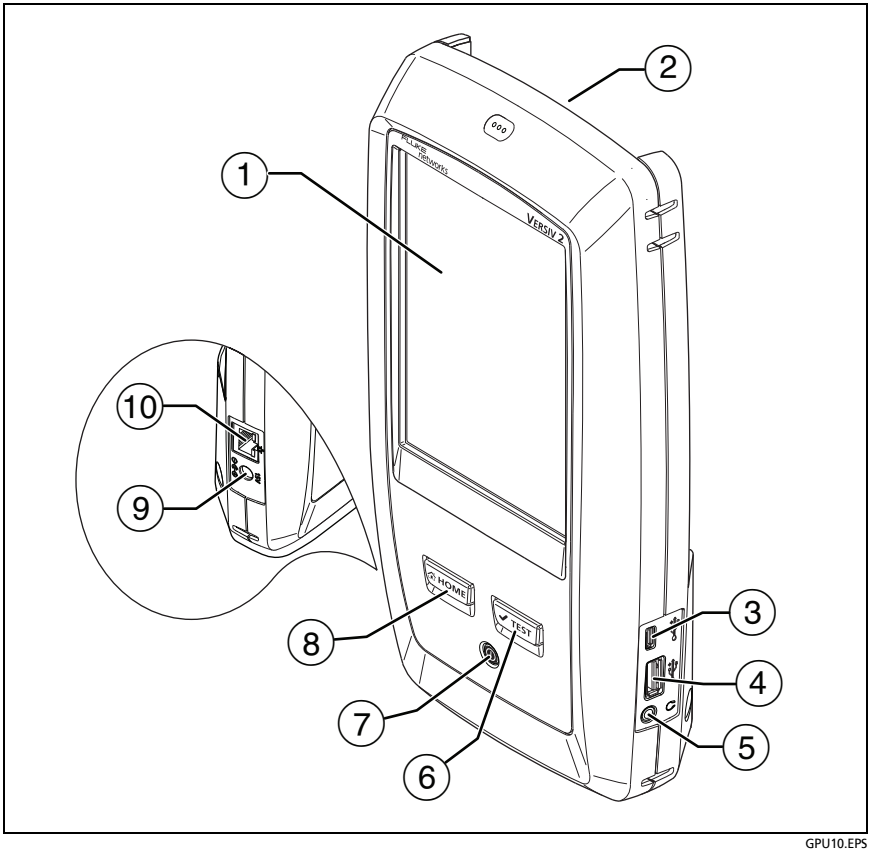

GPU10.EPS

Figure 1. Main Unit Connectors, Keys, and LEDs (Versiv 2 shown)

① LCD display with touchscreen.

② Bay for modules, such as the DSX CableAnalyzer, CertiFiber Pro, or OptiFiber Pro modules, or the blank module for the FI-7000/FI2-7300/FI2-7300-NW.

③ Micro USB port: This USB port lets you connect the tester to a PC so you can upload test results to the PC and install software updates in the tester.

④ Type A USB port: This USB host port lets you save test results on a USB flash drive and connect the video probe to the tester. On a Versiv main tester, this port lets you connect a Wi-Fi adapter for access to the Fluke Networks cloud service LinkWare Live. (Versiv 2 testers have an internal Wi-Fi radio.)

⑤ Headset jack. See "How to Use the Talk Function" for the DSX-CableAnalyzer on page 160 or for the CertiFiber Pro OLTS on page 314.

⑥ TEST: Starts a test. To start a test, you can also tap **TEST** on the display.

⑦ ⏻: Power button. Versiv 2: The LED in the button shows the status of the battery charging process. See Table 2 on page 19.

⑧ HOME: Press HOME to go to the home screen.

⑨ Connector for the AC adapter. Versiv: The LED is red when the battery charges, and green when the battery is fully charged. The LED is yellow if the battery will not charge. See "Charge the Battery" on page 18.

⑩ RJ45 connector: Lets you connect to a network for access to the Fluke Networks cloud service LinkWare Live.

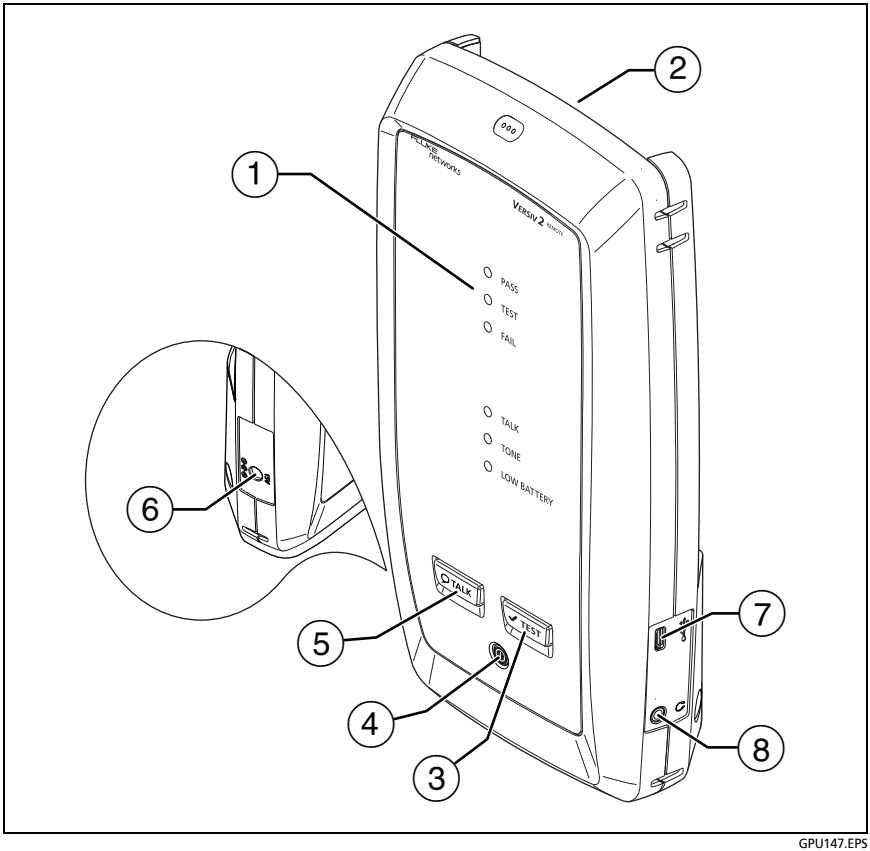

GPU147.EPS

Figure 2. Remote Unit Connectors, Keys, and LEDs (Versiv 2 shown)

① **PASS** LED comes on when a test passes.

TEST LED flashes during a test.

FAIL LED comes on when a test fails.

TALK LED comes on when the talk function is on (⑤). The LED flashes until the main tester accepts the request to talk.

TONE LED flashes if you press TEST when a main tester is not connected to the other end of the cable.

LOW BATTERY LED comes on when the battery is low. The LEDs also have these functions:

- Battery gauge (see Figure 3 on page 21)
- Volume indicator for the **TALK** function
- Progress indicator for software updates

② Bay for modules, such as the DSX CableAnalyzer, CertiFiber Pro, or OptiFiber Pro modules.

③ TEST: Starts a test.

④ ⏻: Power button. Versiv 2: The LED in the button shows the status of the battery charging process. See Table 2 on page 19.

⑤ TALK: Press TALK to use the headset to speak to the person at the other end of the link. Press again to adjust the volume. To turn off the talk function, hold down TALK.

⑥ Connector for the AC adapter. Versiv: The LED is red when the battery charges, and green when the battery is fully charged. The LED is yellow if the battery will not charge. See "Charge the Battery" on page 18.

⑦ Micro USB port: This USB port lets you connect the tester to a PC so you can install software updates in the tester.

⑧ Headset jack. See "How to Use the Talk Function" for the DSX-CableAnalyzer on page 160 or for the CertiFiber Pro OLTS on page 314.

AC Adapter and Battery

You can use the ac adapter (model PWR-SPLY-30W) or the lithium ion battery (model VERSIV-BATTERY) to supply power to the tester.

To remove the battery, see "Remove the Battery" on page 625.

Charge the Battery

Before you use the battery for the first time, charge the battery for about 2 hours with the tester turned off.

To charge the battery

Connect the AC adapter to the 15V jack on the left side of the tester.

Versiv 2: The LED in the power button shows the status of the battery charging process. See Table 2.

Versiv: The LED near the AC adapter connector is red when the battery charges, and green when the battery is fully charged. The LED is yellow if the battery will not charge.

A fully-charged battery operates for approximately 8 hours of typical use. The battery takes approximately 4 hours to fully charge when the tester is turned off.

Notes

You do not need to fully discharge the battery before you recharge it.

The battery will not charge if its temperature is outside the range of 32 °F to 104 °F (0 °C to 40 °C). The LED is yellow if the battery will not charge.

Table 2. Power Button's LED Indications for Versiv 2 Testers

	Green, steady: The tester is on and the AC adapter is not connected, or the AC adapter is connected and the battery is fully charged. Green, flashing: The tester is off, the AC adapter is connected, and the battery is fully charged.
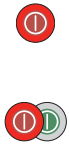	Red, steady: The tester is on and the battery is charging. The LED stays red for a few minutes after the battery status icons show that the battery is fully charged. Red, flashing: The tester is off and the battery is charging.
	Red steady or alternating red/green: The AC adapter is connected, but the battery is not installed.
	Yellow, steady: The tester is on and the AC adapter is connected, but there is an issue with the battery: • The battery voltage is very low. The AC adapter will trickle-charge the battery until the voltage increases, then charge the battery at the normal rate. • The battery will not charge because its temperature is outside the range of 32 °F to 104 °F (0 °C to 40 °C). Yellow, flashing: Same as above, but the tester is off.
 **x5**	Yellow, flashes 5 times: This occurs when the tester reboots after a software update, or if tester reboots because it had an unrecoverable error.

Check the Battery Status

On a main tester

The battery status icon is in the upper-left corner of the screen:



Battery is full. The LED stays red for a few minutes after the battery status icons show that the battery is fully charged.



Battery is approximately half full.



If the AC adapter is not connected, the red bar shows that the battery is low. Connect the AC adapter to charge the battery and make sure the tester continues to operate.

The red bar also shows if the AC adapter is connected, but the battery is not installed.

On a remote

The LEDs show the battery status at the end of the power-up sequence, as shown in Figure 3.

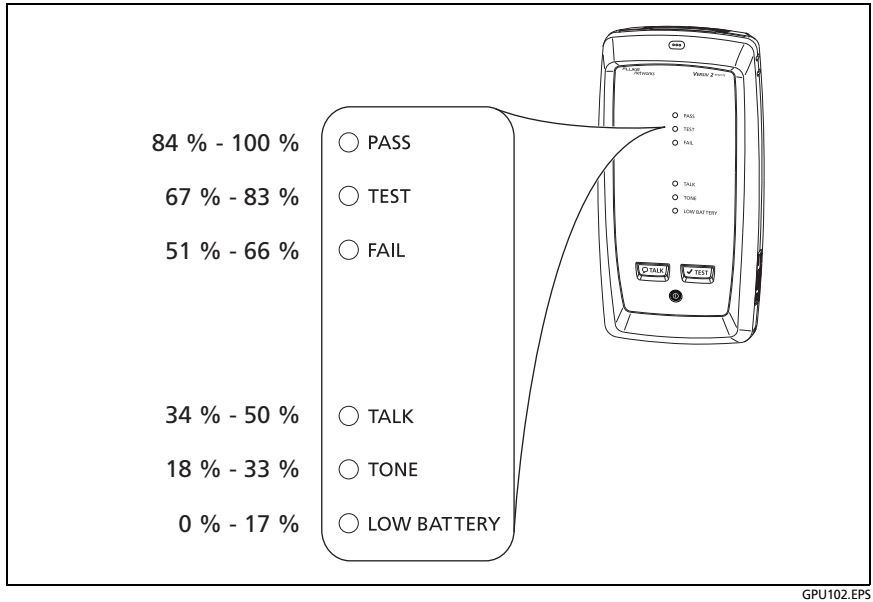

Figure 3. LEDs Show the Remote's Battery Status

To see more information about a remote's battery status

1. Make the connections shown in Figure 4 and turn on both testers.
2. For CertiFiber Pro testers, select **Smart Remote** or **Loopback** mode.
3. Make sure the connection icon shows at the top of the screen ( ).
4. Tap **TOOLS**, then tap **Battery Status**.

When the ac adapter is not connected, the screen shows the **Time Remaining**, which is the approximate battery life at the present rate of use.

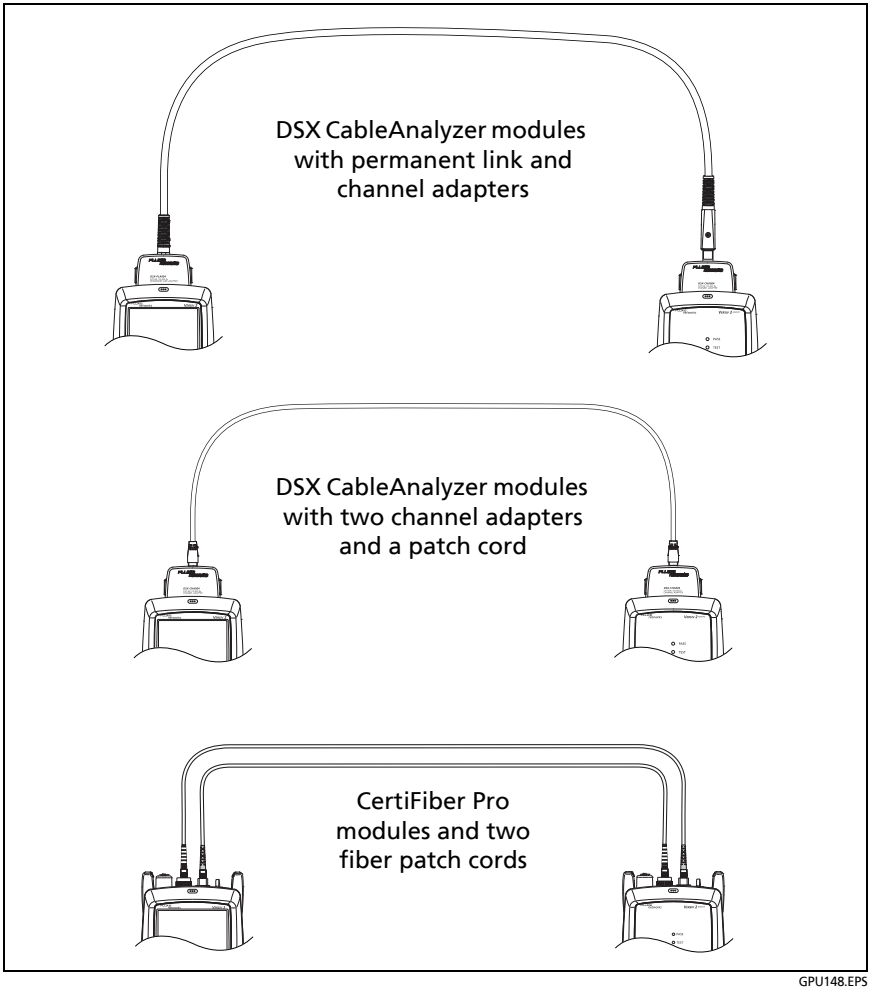

Figure 4. Connections to See the Status of the Remote's Battery

Verify Operation

The tester does a self test when you turn it on. If the tester shows an error or does not turn on, refer to “If the Tester Does Not Operate as Usual” on page 628.

How to Use the Touchscreen

The main tester’s Taptive user interface lets you use a touchscreen to control the tester. You can operate the touchscreen with your fingertip or with a stylus that is made for projected capacitance touchscreens.

⚠Caution

For correct operation and to prevent damage to the touchscreen:

- **Touch the screen only with your fingers or with a stylus that is made for projected capacitance touchscreens. Do not use too much force.**
- **Do not touch the screen with sharp objects.**

Note

The touchscreen will not respond if you tap it with your fingernail or an incorrect type of stylus or if you wear non-conductive gloves.

To use the touchscreen

- To select an item on the screen, tap the item lightly with your fingertip.
- To scroll a screen, lightly touch the screen then move your fingertip in the direction you want the screen to move.

- On screens that show a plot, trace, or FiberInspector image, use the pinch and reverse-pinch gestures to change the magnification on the screen. See Figure 5.

  When you zoom a trace or plot horizontal and vertical zoom controls show on the screen. These controls let you change the magnification on the distance and decibels scales independently.

  You can zoom in to a maximum magnification factor of 128:1.

- On screens that show a plot, trace, or FiberInspector image, you can drag some items, such as the measurement cursor on a plot or trace or the image on a FiberInspector screen.

To clean the touchscreen

Turn off the tester, then use a soft, lint-free cloth that is moist with a mild detergent.

⚠Caution

When you clean the touchscreen, do not let liquid get under the plastic around the touchscreen.

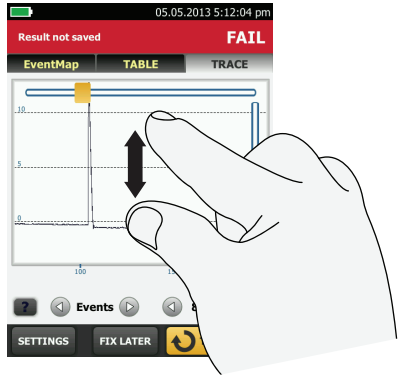

To zoom in, use the reverse-pinch gesture or the horizontal and vertical zoom controls.

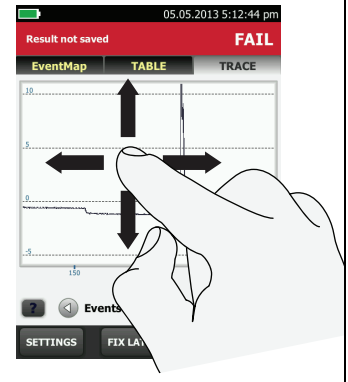

To move the image, drag it in any direction.

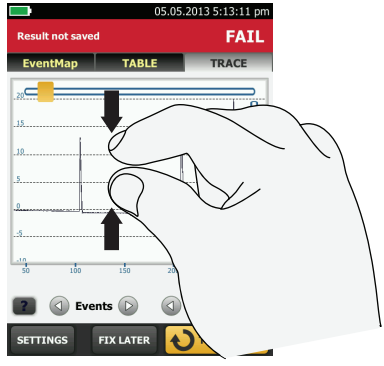

To zoom out, use the pinch gesture or the horizontal and vertical zoom controls.

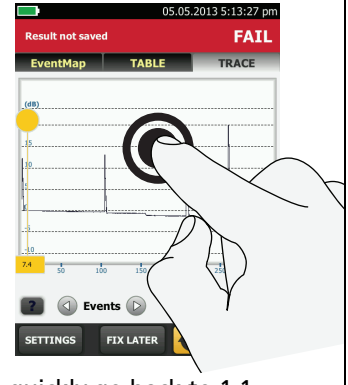

To quickly go back to 1:1 magnification, double-tap the screen.

GPU45.EPS

Figure 5. How to Zoom the Screen

The HOME Screen

The **HOME** screen (Figure 6) shows important test settings. Before you do a test, make sure these settings are correct.

For a home screen with a DSX CableAnalyzer module installed, see Figure 26 on page 79.

For a home screen with a CertiFiber Pro module installed, see Figure 114 on page 260.

For a home screen with an OptiFiber Pro module installed, see Figure 139 on page 328.

① **PROJECT**: The project contains the settings for a job and helps you monitor the status of a job. When you save test results, the tester puts them in the project. Tap the **PROJECT** panel to edit the project settings, select a different project, or make a new project.

② Shows a summary of the test results in the project:

: The number of tests that passed.

: The number of tests that failed.

The number of results from tests on twisted pair cable that have **PASS*** results. **PASS*** results have measurements within the range of accuracy uncertainty for the tester. See “PASS*/FAIL* Results” on page 101.

③ The test setup panel shows the settings the tester will use when you tap **TEST** or press TEST.

To change these settings, tap the panel, select the test on the **CHANGE TEST** screen, tap **EDIT**, select different settings on the **TEST SETUP** screen, then tap **SAVE**.

Note

You can set up tests for any module that the tester can use, even when no module is attached.



GPU98.EPS

Figure 6. The HOME Screen (DSX CableAnalyzer screen shown)

④ For copper test setups, icons show the status of the **Store Plot Data** and **AC Wire Map** settings. See Table 3 on page 85.

⑤ **Next ID**: The **Next ID** panel shows the ID that the tester gives to the next test results you save.

Tap **Next ID** to do these tasks:

- Enter an ID, select a different ID in the ID set, select a different set of IDs, or make a new set. The tester adds the IDs and ID sets you make to the project that shows on the home screen.
- Turn **Auto Save** on or off.
- Select **End 1** or **End 2** for OTDR and FiberInspector tests and loss/length tests in Far End Source mode.
- Enter a name for **End 1** and **End 2**.

⑥ **Operator**: The name of the person who does the job. You can enter a maximum of 20 operator names.

For each operator you can also enter the email address that the operator will use as an ID to sign in to LinkWare Live.

To change the email address associated with an operator, select the operator, then sign in to LinkWare Live with a different address on the **LWL SIGN IN** screen. See Chapter 18.

⑦ **TOOLS**: The **TOOLS** menu lets you set up the compensation function for the launch/tail cords, use tools such as the real-time trace and the FiberInspector test, see the status of the tester, and set user preferences such as the language and the display brightness.

⑧ **RESULTS**: Tap **RESULTS** to see and manage the results that are saved in the tester.

⑨ **SYNC**: To upload test results to LinkWare Live, tap **SYNC**. See Chapter 18.

⑩ **TEST**: Tap **TEST** to do the test shown in the test setup panel.

⑪ The percentage of the tests in the project that are completed. The tester uses the number of available IDs and, for fiber tests, the tests you selected on the **CABLE ID SETUP** screen to calculate this percentage. See Figure 208 on page 554. **% Tested** does not show if your project contains only a **Next ID** list. See "To Make ID Sets with International Characters" on page 581 for more information about the **Next ID** list.

⑫ The type of module attached to the tester. If no module is attached, this screen shows **HOME**.

⑬  Battery status icon. See page 20.

 This icon shows when the tester's link interface adapter is connected to the adapter on a remote and the remote is turned on.

 DSX-5000 module only: The arrows on the remote connection icon are orange when the main and remote use long-range communication mode. See "Long-Range Communication Mode (DSX-5000)" on page 161.

 When you connect the tester to a Wi-Fi or wired network to use the LinkWare Live web application, the Wi-Fi or wired icon shows at the top of the screen. See Chapter18.

 The asset management icon shows when the owner of a LinkWare Live account has enabled the asset management service for the tester. See "Sign Your Tester Out of LinkWare Live" on page 597.

 This icon shows when the talk function is on. See "How to Use the Talk Function" on page 160.

How to Enter Text

When you tap a panel to enter text, a keyboard shows on the bottom half of the display (Figure 7).

- To enter characters, tap the characters on the keyboard.
- To change the case of the letters, tap .
- To delete characters, tap .
- To move the cursor into a group of characters, tap on the group.
- To select a group of characters, double-tap on the group.
- To enter symbols or accented letters, tap 

or 

, then tap the symbols or letters on the keyboard.
- To save the text, tap **DONE**.

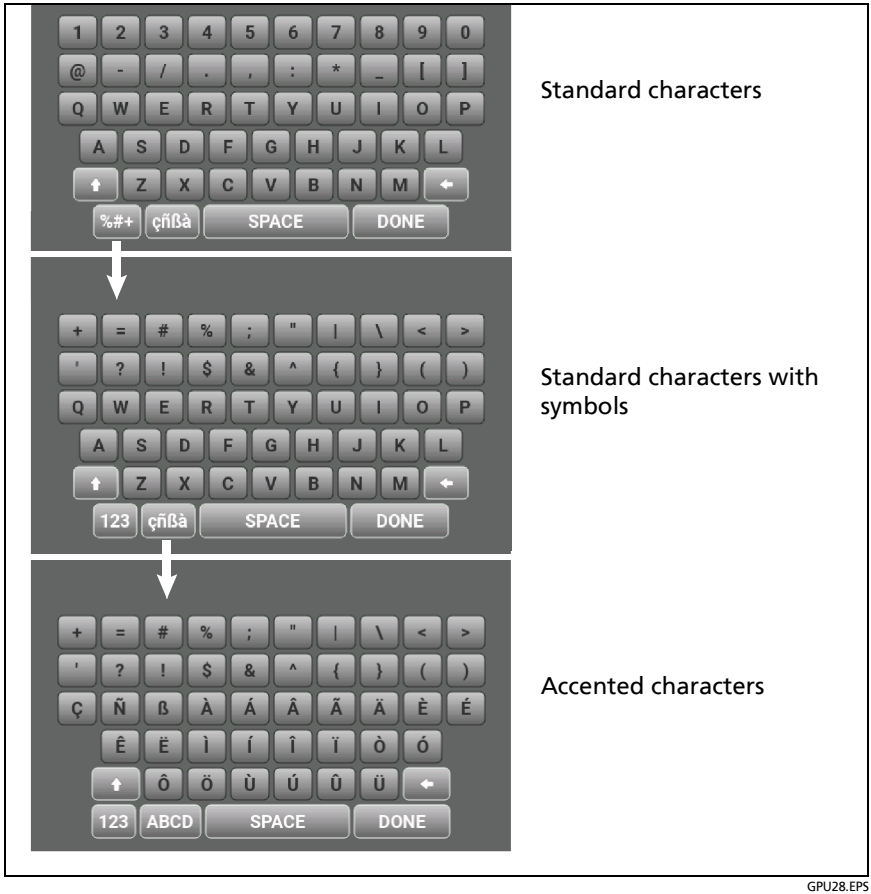

GPU28.EPS

Figure 7. Keyboards for Text Entry

Set User Preferences

User preferences are settings you usually change when you use the tester for the first time.

Note

You can use LinkWare PC software to make a file that contains settings for user preferences, then you can install the settings in one or more testers. You can also export the settings from the tester to LinkWare PC. See "Import User Preferences from a File" on page 35. Also see the online help in LinkWare PC.

Language

On the home screen, tap the **TOOLS** icon, tap **Language**, then tap a language.

Date and Time Settings and Formats

Note

If you remove the battery and do not connect the ac adapter, the clock keeps the current date and time for a minimum of 4 hours.

1 On the home screen, tap the **TOOLS** icon, tap **Date/Time**, then tap the setting you want to change:

- To set the date, tap **Date**. Tap  or  to select a month and year for the calendar, then tap the correct date on the calendar. Tap **DONE** to save your setting.

- To set the time, tap **Time**. Tap  or  to increase or decrease the setting for hours, minutes, and seconds. Tap **DONE** to save your settings.

- To set the date format, tap **Date Format**, then tap a format for the day (**DD**), month (**MM**), and year (**YYYY**).
- To set the time format to 12-hour clock or a 24-hour clock, tap the **Time Format** control to make **12 hr** or **24 hr** show.

2 To go back to the home screen from the **Date/Time** screen, tap  two times or press .

Number Format

The tester can show decimal fractions with a decimal point (0.00) or a comma (0,00).

1 On the home screen, tap the **TOOLS** icon.

2 In the **Number** panel, tap the control to show **0.0** or **0,0**.

3 To go back to the home screen, tap  or press .

Units for Length Measurements

1 On the home screen, tap the **TOOLS** icon.

2 In the **Length** panel, tap the control to show **ft** or **m**.

3 To go back to the home screen, tap  or press .

Power-Down and Backlight Timeout Periods

To increase the battery life, the tester can turn off the backlight and automatically turn off the tester when you do not press any keys for a specified period.

When the backlight timeout period ends, the brightness of the backlight decreases. After one more timeout period, the display turns off. Touch the display to turn it on.

1 On the home screen, tap the **TOOLS** icon.

2 Tap **Timeout Period**, then tap **Backlight** or **Power Down**.

3 Tap a time. To always keep the backlight or tester on, tap **Disabled**.

4 To go back to the home screen, tap  two times or press .

The remote tester turns off after 60 minutes of inactivity. You cannot change this setting.

Audible Tone

You can enable or disable the tones the tester makes during tests and when you press keys. If you connect a remote tester to the main tester through DSX or CertiFiber Pro modules, the remote uses the main tester's setting.

1 On the home screen, tap the **TOOLS** icon.

2 In the **Audible Tone** panel, tap the control to show **On** or **Off**.

3 To go back to the home screen, tap  or press .

Power Line Frequency

Set the power line frequency to the power frequency in the area where you will use the tester. This setting decreases the effects of ac noise on the circuits in the tester.

1 On the home screen, tap the **TOOLS** icon.

2 In the **Power Line Frequency** panel, tap the control to show **50 Hz** or **60 Hz**.

3 To go back to the home screen, tap  or press .

Display Brightness

1. On the home screen, tap the **TOOLS** icon, then tap **Display**.
2. On the brightness scale, tap or slide the yellow bar to adjust the brightness, then tap **DONE**.

Note

When you increase the display brightness, the battery life decreases.

3. To go back to the home screen, tap  or press .

Import User Preferences from a File

You can use LinkWare PC software to make a file that contains settings for user preferences, then you can import the file into the tester. You can also export settings from a tester to the PC. See the online help in LinkWare PC for instructions.

How to Install a Strap

Two types of straps are available for the tester: a hand strap that helps you hold the tester, and a carrying strap that lets you carry and hang the tester. If one of the types is not included with your tester, you can purchase it from an authorized Fluke Networks distributor. Figure 8 shows how to install a strap and how to use the hand strap.

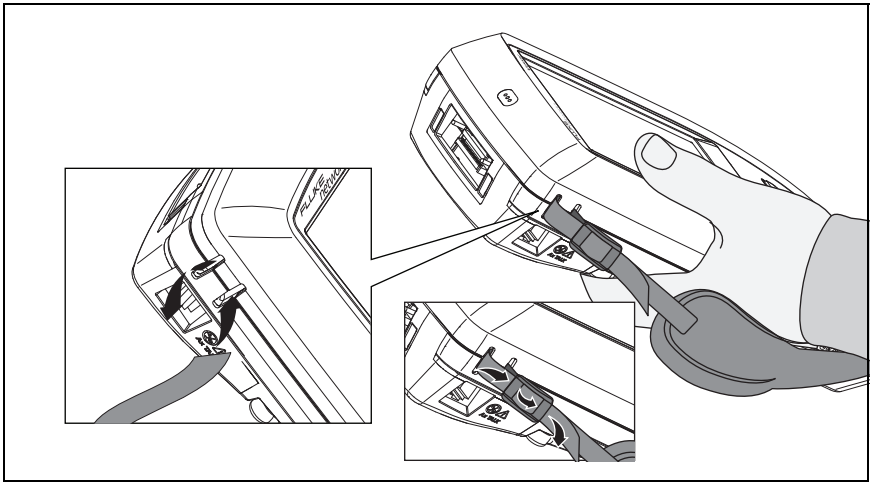

GPU43.EPS

Figure 8. How to Install a Strap and Use the Hand Strap

How to Remove or Install a Module

Figure 9 shows how to remove and install the module.

Note

It is not necessary to turn off the tester before you remove or install a module.

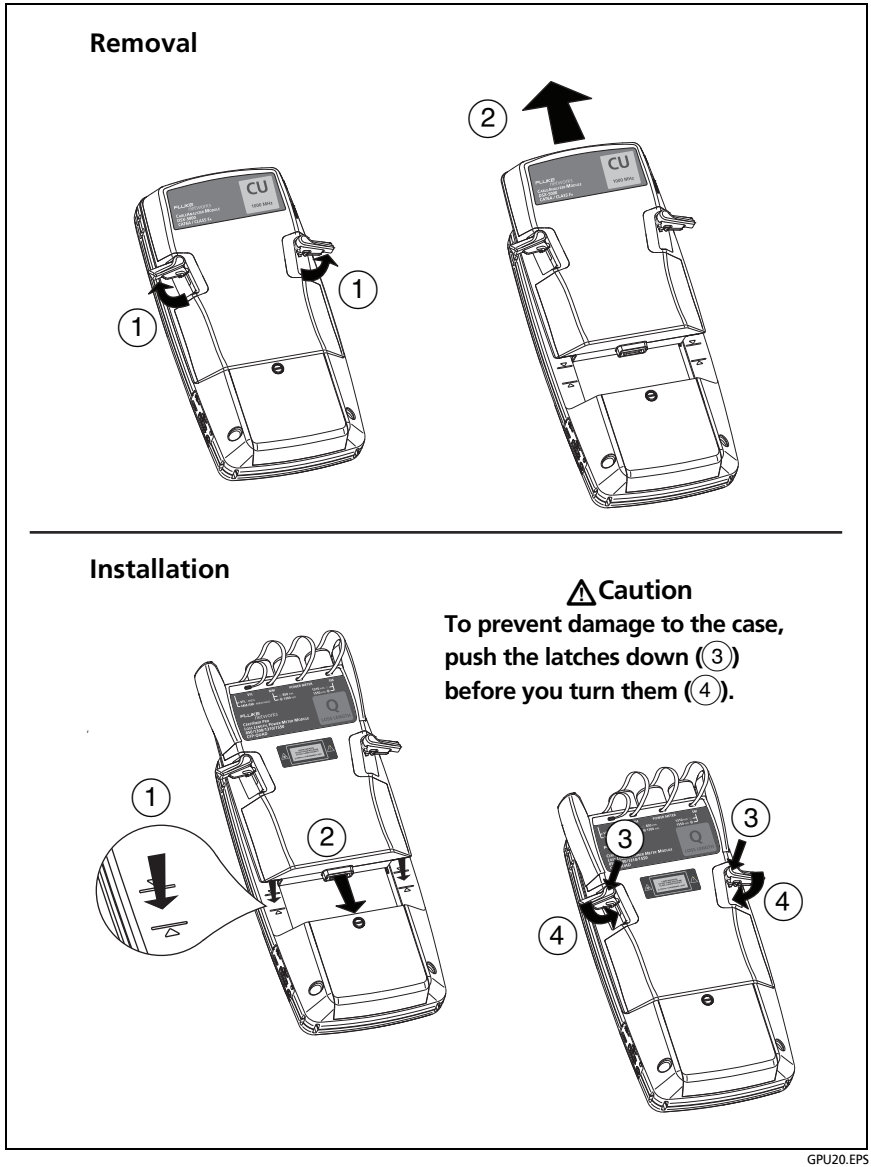

Figure 9. How to Remove and Install a Module

About LinkWare Applications

LinkWare PC Cable Test Management Software

The LinkWare PC Cable Test Management software lets you upload test records to a PC, organize and examine test results, print professional-quality test reports, and do software updates and other maintenance procedures on your tester.

You can download LinkWare PC from the Fluke Networks website.

The LinkWare Live Web Application

The LinkWare Live web application lets you manage projects from a desktop or mobile device.

To get started with LinkWare Live, go to **www.linkwarelive.com/signin**. See Chapter 18.

LinkWare Stats

The LinkWare Stats Statistical Report software that is included with LinkWare software provides statistical analysis of cable test reports and generates browsable, graphical reports.

For instructions about LinkWare PC and LinkWare Stats software, see the guides for getting started and the online help available under **Help** on the LinkWare PC and LinkWare Stats menus.

Chapter 2: Get Started

⚠⚠Warning

Before you use the tester, read the safety information that starts on page 5.

Tutorial: Certify Twisted Pair Cabling

The tutorial in this section gives instructions on how to set up a test to certify twisted pair cabling, do the test, and save the results.

Figure 10 shows the minimum equipment necessary for this tutorial.

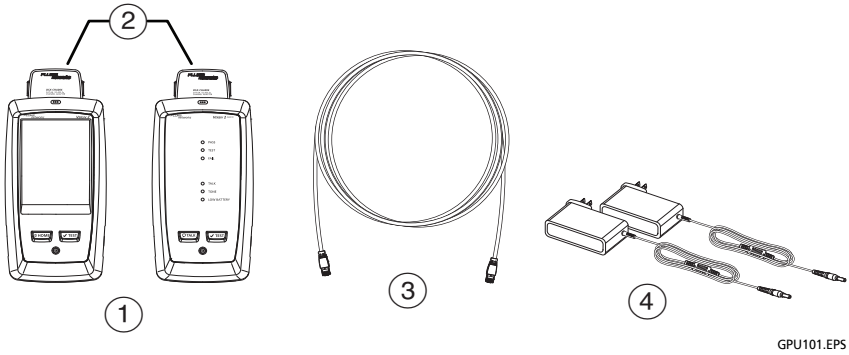

1. Main and remote testers with DSX CableAnalyzer modules installed
2. Two channel adapters
3. Twisted pair cable
4. AC adapters (optional)

Figure 10. Equipment for the Twisted Pair Certification Tutorial

Step 1: See How Much Memory is Available

On the home screen, tap the **TOOLS** icon, then tap **Memory Status**.

The **MEMORY STATUS** screen shows these values:

- The percentage of memory available
- The number of test records that are saved
- The number of ID sets that have been downloaded to the tester from LinkWare PC or LinkWare Live.
- The memory space taken by other files, such as the databases for projects and limits.

Step 2: Set Up a Twisted Pair Test

2-1 Attach DSX CableAnalyzer modules to the main tester and the remote.

2-2 On the home screen, tap the test setup panel.

2-3 On the **CHANGE TEST** screen, tap **NEW TEST**.

2-4 On the **TEST SETUP** screen, tap each setting to make these selections:

- **Module:** This is the module you will use for the test. For a test on twisted pair cable, tap **DSX-8000 CableAnalyzer** or **DSX-5000 CableAnalyzer**.

Note

You can select settings for any module that the tester can use. It is not necessary to install a module before you set up a test for that module.

- **Cable Type**: This is the type of cable you will test. The **CABLE TYPE** screen shows the last 10 types of cable that were selected. Tap the correct cable type.

  If you do not see the correct cable type, tap **MORE**, tap the name of a cable group, then tap a cable in the group.

- **NVP**: Nominal velocity of propagation, which the tester uses to calculate length. For this tutorial, use the default value. The default value is defined by the selected cable type and is the typical NVP for that cable type.

- **Shield Test**: This setting shows only when you select a shielded cable type. If you selected a shielded cable type, select **On** for this setting.

- **Test Limit**: The test limit specifies the limits for measurements so that the tester can give a **PASS** or **FAIL** result to the test. The **TEST LIMIT** screen shows the last 10 limits that were selected.

  If you do not see the correct test limit, tap **MORE**, tap the name of a group, then tap a test limit.

- **Store Plot Data**: If **Store Plot Data** is **Off**, the tester does not save plot data for frequency-domain tests or for the HDTDR/HDTDX analyzers. You can see the plots before you save the test and exit the results screen. If **Store Plot Data** is **On**, the tester saves plot data for frequency-domain tests.

  Make sure that **Store Plot Data** is **On**. If it is not, tap the **On/Off** control.

- **HDTDR/HDTDX**: This setting lets you see results from the HDTDR™ and HDTDX™ analyzers only when a test gets a **FAIL** or **PASS*** result, or after every Autotest. The analyzer results help you locate the causes of **FAIL** and **PASS*** results. These tests are not required by any test limit. To always see these results, select **All Autotests**.

- **Outlet Configuration**: This is the wire map for the cable. The **Test Limit** you select determines which **Outlet Configurations** you can select on the **OUTLET CONFIG** screen.

  If the correct outlet configuration does not show, tap **Outlet Configuration**. On the **OUTLET CONFIG** screen, tap the correct configuration, then tap **USE SELECTED**.

- **AC Wire Map**: This setting lets you do tests on links connected through midspan PoE (Power over Ethernet) devices. For this tutorial, make sure this setting is **Off**.

2-5 On the **TEST SETUP** screen, tap **SAVE**.

2-6 On the **CHANGE TEST** screen, tap the twisted pair test you made, then tap **USE SELECTED**.

For more information on settings, see “Settings for Twisted Pair Tests” on page 84.

Step 3: Turn Off the Auto Save Function

For this tutorial, you will manually save the test results.

3-1 On the home screen, tap the **Next ID** panel.

3-2 On the **CHANGE ID** screen, tap the **Auto Save** control to make it show **Off**.

3-3 Tap **DONE.**

Step 4: Do an Autotest

4-1 Attach the channel adapters to the main and remote testers.

4-2 Turn on both testers, then connect a twisted pair cable between the adapters.

4-3 Tap **TEST** on the main tester or press ✔TEST on the main or remote tester.

Step 5: Look at the Results

The tester shows the Autotest results in three formats (Figure 11):

- **WIRE MAP**: Shows the connections between the ends of the cable.
- **PERFORMANCE**: Shows the overall result for each test. Use this screen to quickly see which test failed.
- Plot and tabular results screens: Tap a test on the **PERFORMANCE** screen to see a table or plot of the results.
- If you set **HDTDR/HDTDX** to **All Autotests**, you can see the analyzers' results on the **DIAGNOSTIC** tab.

If the test failed, the **FAULT INFO** tab shows information to help you identify and locate the fault.

Step 6: Save the Results

6-1 Tap **SAVE** (if the result was **PASS**) or **FIX LATER** (if the result was **FAIL**).

6-2 On the **SAVE RESULT** screen, tap the **Cable ID** box, use the keyboard to enter an ID for the results, then tap **DONE**.

6-3 Tap **SAVE**.

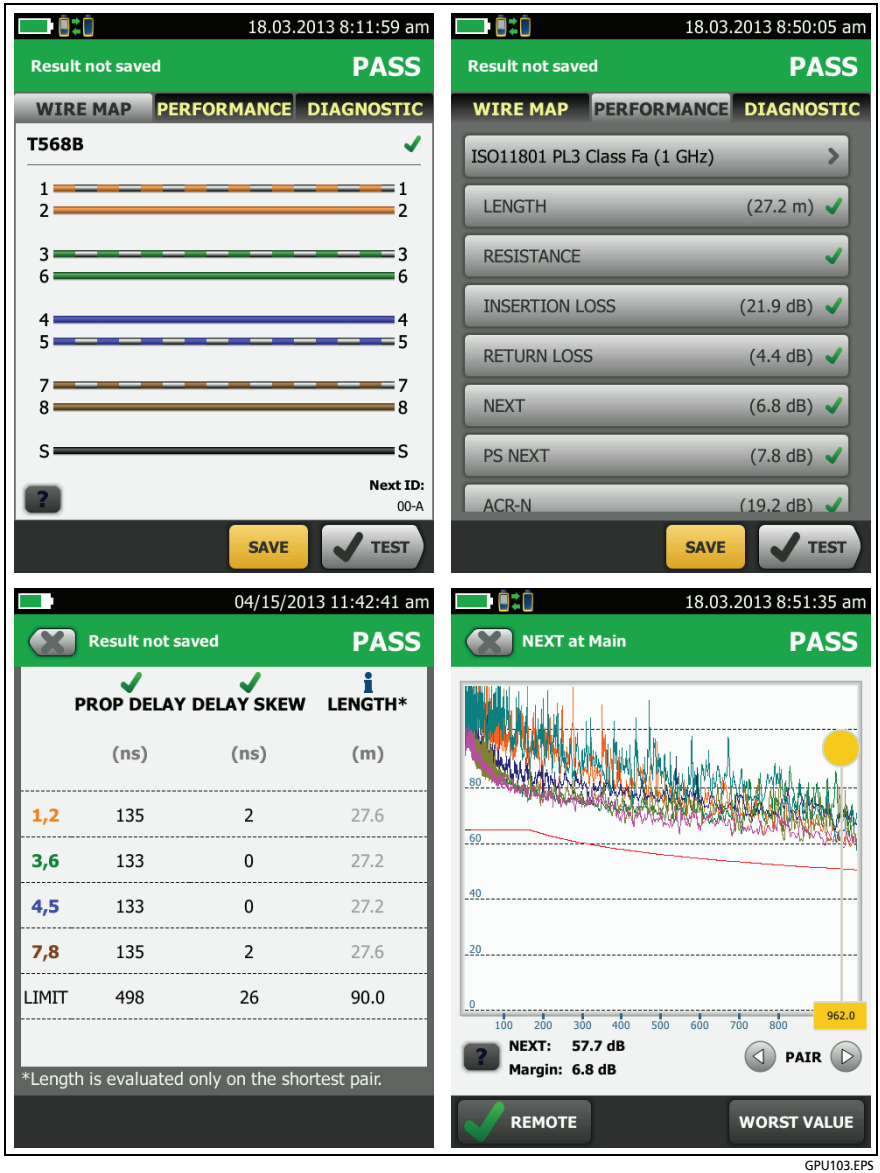

GPU103.EPS

Figure 11. Examples of Twisted Pair Autotest Results Screens

Tutorial: Certify Fiber Optic Cabling

The tutorial in this section gives instructions on how to set up a loss/length test in Smart Remote mode to certify fiber optic cabling, and save the results.

Figure 12 shows the minimum equipment necessary for this tutorial.

Step 1: See How Much Memory is Available

On the home screen, tap the **TOOLS** icon, then tap **Memory Status**.

The **MEMORY STATUS** screen shows these values:

- The percentage of memory available
- The number of test records that are saved
- The number of ID sets that have been downloaded to the tester from LinkWare PC or LinkWare Live.
- The memory space taken by other files, such as the databases for projects and limits.

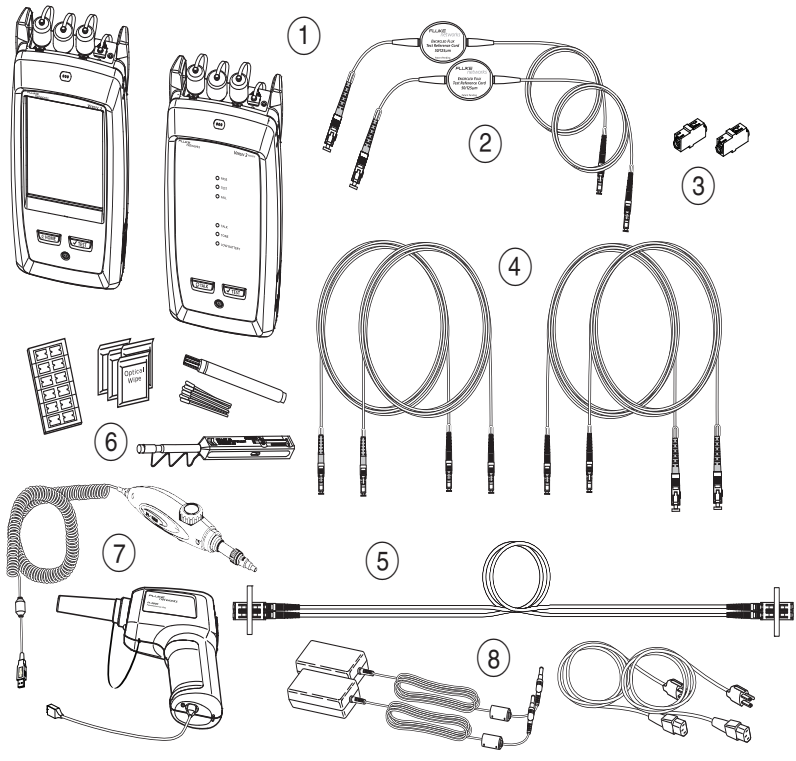

1. Main and remote testers with CertiFiber Pro modules installed
2. For multimode fiber: two EF-TRC test reference cords
3. Two single-mode adapters
4. For multimode fiber: two test reference cords. For single-mode fiber: four test reference cords.
5. Duplex fiber link or segment
6. Fiber cleaning supplies
7. FI-1000 or FI-3000 video probe with USB connector
8. AC adapters (optional)

Figure 12. Equipment for the Fiber Certification Tutorial

Step 2: Set Up a Loss/Length Test

2-1 Attach CertiFiber Pro modules to the main tester and the remote.

2-2 On the home screen, tap the test setup panel.

2-3 On the **CHANGE TEST** screen, tap **NEW TEST**.

2-4 On the **TEST SETUP** screen, tap each setting to make these selections:

- **Module:** This is the module you will use for the test. For a loss/length test on fiber cable, tap the CertiFiber Pro module you will use.

  Note

  You can select settings for any module that the tester can use. It is not necessary to install a module before you set up a test for that module.

- **Test Type**: Use **Smart Remote** mode for tests on duplex fibers. Use **Loopback** and **Far End Source** mode for tests on single fibers. For this tutorial, select **Smart Remote** mode.
- **Bi-directional**: This setting lets you do fiber tests in both directions. For this tutorial, set it to **On**.
- **Fiber Type**: This is the type of fiber you will test. The **FIBER TYPE** screen shows the last 10 types of cable that were selected. Tap the correct fiber type.

  If you do not see the correct fiber type, tap **MORE**, tap the name of a fiber group, then tap a fiber in the group.
- **Fiber Type Settings**: Tap this item to see the index of refraction (**IR**) values for the **Fiber Type** you selected.

- **Test Limit**: The test limit specifies the limits for measurements so that the tester can give a **PASS** or **FAIL** result to the test. The **TEST LIMIT** screen shows the last 10 limits that were selected.

  For this tutorial, select **General Fiber Optic**. If you do not see this limit on the **TEST LIMIT** screen, tap **MORE**, tap **Application**, then tap **General Fiber Optic**.

- **Reference Method**: Select the number of jumpers you use in each fiber path when you set the reference. For this tutorial, select **1 Jumper**.

- **Connector Type**: Select the type of connector, such as SC or LC, used in the cabling. The tester saves this setting to record the type of connector you used. This setting does not change your test results or any of the diagrams that the tester shows. If the correct type is not in the list, select **General**.

- **No. of Connections/Splices**: The **Total Connections** and **Splices** settings are applicable only if the selected test limit uses a calculated limit for loss. **General Fiber Optic** does not use a calculated limit, so it is not necessary to select these values.

2-5 On the **TEST SETUP** screen, tap **SAVE**.

For more information on settings, see “Settings for Loss/Length Tests on Fiber” on page 271.

Step 3: Turn Off the Auto Save Function

For this tutorial, you will manually save the test results.

3-1 On the home screen, tap the **Next ID** panel.

3-2 On the **CHANGE ID** screen, tap the **Auto Save** control to make it show **Off**.

3-3 Tap **DONE.**

Step 4: Set the Reference

The reference procedure for fiber cable sets a baseline power level for loss measurements. It is important to set the reference frequently for loss/length tests.

4-1 Turn on the tester and remote and let them sit for a minimum of 5 minutes. Let them sit longer if they are above or below ambient temperature.

4-2 Clean and inspect the connectors on the tester, remote, and test reference cords.

4-3 On the home screen tap **SET REF**.

4-4 On the **SET REFERENCE** screen, tap **RUN WIZARD**.

4-5 Make the connections to set the reference, as shown on the screen and in Figure 13 above **Reference**, then tap **NEXT** to see the completed connections.

Note

When you set the reference, align the testers as shown in Figure 13 to keep the fibers as straight as possible.

4-6 To enter the length of the test reference cords you will add to connect to the link, tap **TRC LENGTH** on the **SET REFERENCE** screen. The length you enter does not change the test results. The tester saves the length with the results to meet TIA reporting requirements.

4-7 Tap **SET REFERENCE**.

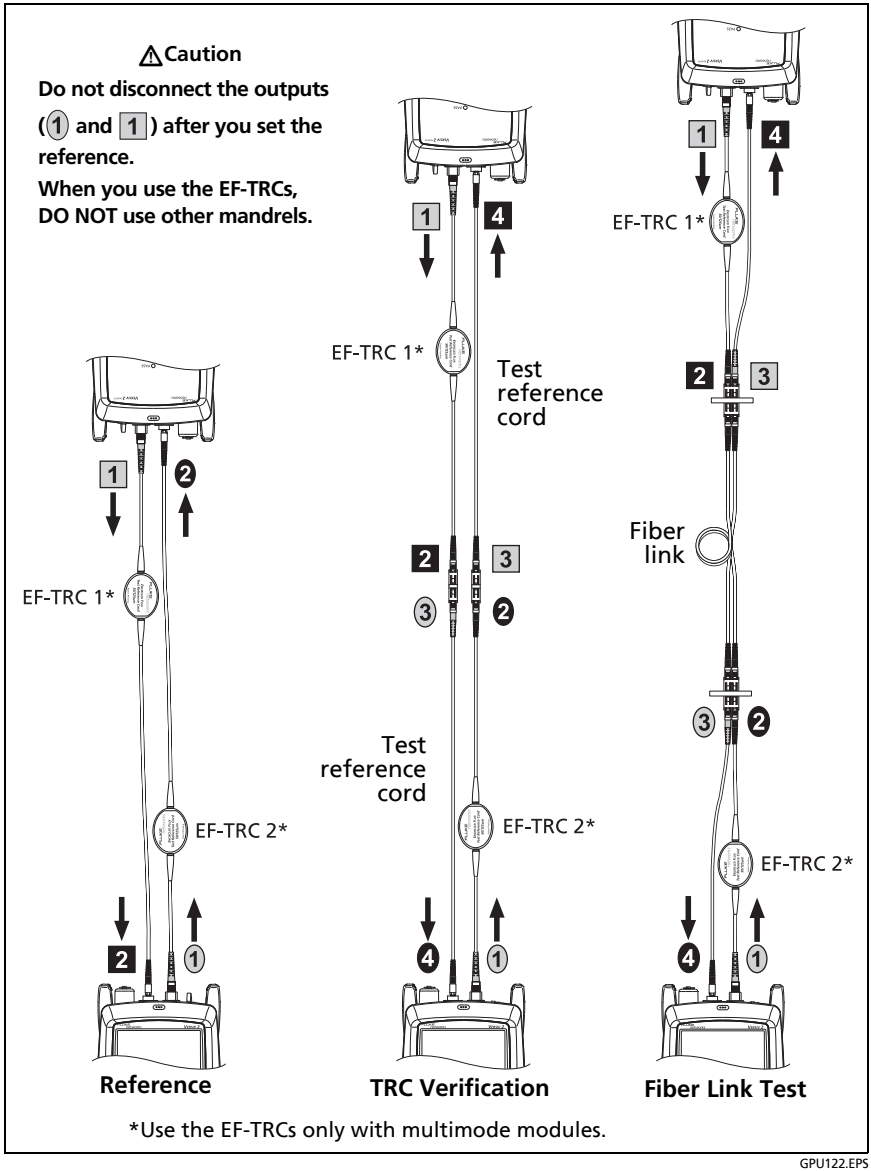

Figure 13. Connections for Smart Remote Mode (1 Jumper Method, Multimode Fiber)

Step 5: Measure the Loss of the Test Reference Cords You Will Add

⚠Caution

If you disconnected a test reference cord from the output of the tester or remote, you must set the reference again to make sure your measurements are reliable.

5-1 On the **SET REFERENCE** screen, when the reference procedure is completed, tap **NEXT**.

5-2 Disconnect the test reference cords from the INPUT ports on the tester and remote, then use test reference cords and adapters to make the connections to verify the TRCs, as shown on the screen and in Figure 13 above **TRC Verification**.

5-3 Tap **TRC VERIFICATION**. The tester measures and saves the loss of the test reference cords you added.

If the tester shows a warning, clean and inspect the connectors on the TRCs in the path that has too much loss, then set the reference and do the TRC verification again.

Step 6: Do an Autotest in Smart Remote Mode

⚠Caution

If you disconnected a test reference cord from the output of the tester or remote, you must set the reference again to make sure your measurements are reliable.

6-1 On the **SET REFERENCE** screen, when the set reference or TRC verification procedure is completed, tap **NEXT** to see how to connect to the link under test.

6-2 Clean and inspect all the connectors.

6-3 Make the connections to do the test on the fiber link, as shown on the screen and in Figure 13 above **Fiber Link Test**, then tap **DONE**.

6-4 Tap **TEST** on the main tester or press TEST on the main or remote tester.

6-5 Halfway through the test, the tester tells you to switch the input and output fibers for the bi-directional test.

⚠Caution

Switch the connections at both ends of the patch panel or fiber under test, not at the tester's and remote's ports. If you disconnect a test reference cord from an output port on the tester or remote, the reference value will be unreliable.

Step 7: Look at the Results

The tester shows the Autotest results in two formats (Figure 14):

- The first screen shows the worst-case results for each fiber.
- To see more details about a fiber, tap a result window.

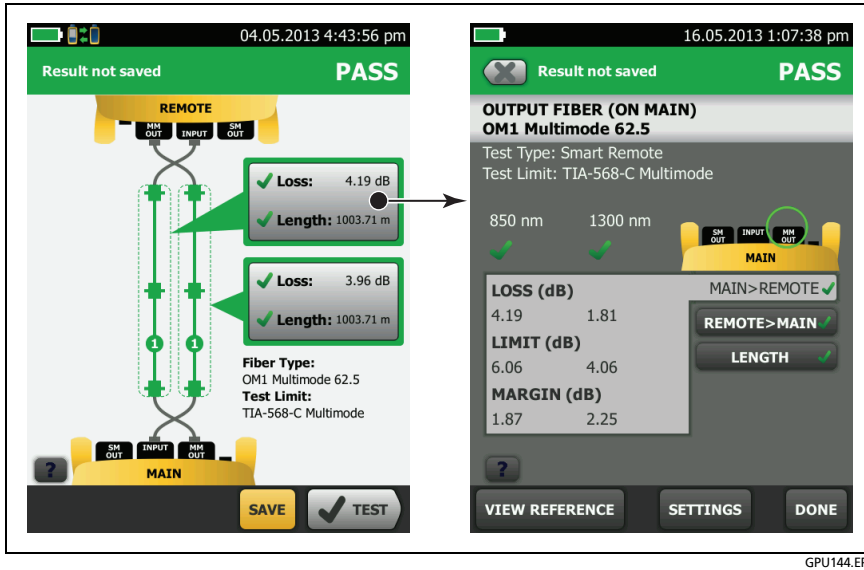

GPU144.EPS

Figure 14. Examples of Fiber Autotest Results Screens

Step 8: Save the Results

8-1 Tap **SAVE** (if the result was **PASS**) or **FIX LATER** (if the result was **FAIL**).

8-2 On the **SAVE RESULT** screen, tap the **Cable ID** box, use the keyboard to enter an ID for the results, then tap **DONE**.

8-3 Tap **SAVE**.

Tutorial: Do a Bi-directional SmartLoop Test

The tutorial in this section gives instructions on how to set up for a bi-directional SmartLoop test, set up the launch compensation function, make connections, do a test, and save the results.

When you do a bi-directional SmartLoop test, one OTDR test at one end of the link gives you bi-directional results for both fibers. Also, the tester automatically averages the bi-directional results and includes the averaged results in the test record.

Figure 15 shows the equipment necessary for this tutorial.

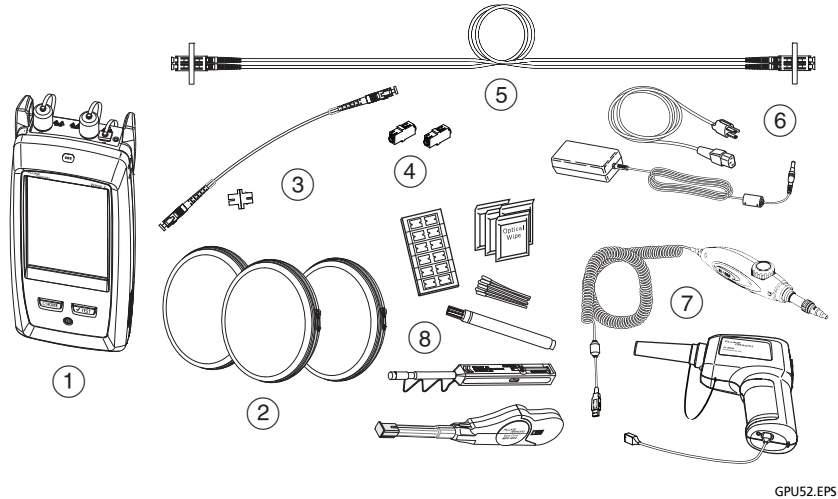

1. Main tester with OptiFiber Pro module installed
2. Three launch cords for launch, tail, and loopback connections (match the fiber to be tested)
3. OTDR port protector patch cord and adapter (30 cm, 12 in)
4. Two single-mode adapters
5. Dual-fiber link or segment
6. AC adapters (optional)
7. FI-1000 or FI-3000 video probe with USB connector
8. Fiber cleaning supplies

Figure 15. Equipment for the SmartLoop Tutorial

Step 1: See How Much Memory is Available

On the home screen, tap the **TOOLS** icon, then tap **Memory Status**.

The **MEMORY STATUS** screen shows these values:

- The percentage of memory available
- The number of test records that are saved
- The number of ID sets that have been downloaded to the tester from LinkWare PC or LinkWare Live.
- The memory space taken by other files, such as the databases for projects and limits.

Step 2: Set Up a Bi-directional SmartLoop Test

Note

*You can select settings for any module that the tester can use. It is not necessary to install a module before you set up a test for that module. If a module is not installed, the **MODULE** screen shows to let you select the module you will use.*

2-1 Attach an OptiFiber Pro module to the tester.

2-2 On the home screen, tap the test setup panel.

2-3 On the **CHANGE TEST** screen, tap **NEW TEST**.

2-4 On the **TEST TYPE** screen, tap **SmartLoop OTDR (Auto)**.

2-5 On the **TEST SETUP** screen, tap each setting to make these selections:

- **Module:** This is the module you will use for the test.

Note

You can select settings for any module that the tester can use. It is not necessary to install a module before you set up a test for that module.

- **Test Type**: Make sure the **Test Type** is **SmartLoop OTDR (Auto)**.
- **Bi-directional**: Tap the **On/Off** control to make it show **On**.
- **Wavelengths**: You can do tests at one or all of the wavelengths that the fiber type supports. For this tutorial, select all available wavelengths.
- **Fiber Type**: Select the type of fiber you will test. The **FIBER TYPE** screen shows the last 10 types of fiber that were selected.

  If you do not see the necessary fiber type, tap **MORE**, tap the name of a **Fiber Group**, then tap a fiber in the group.
- **Fiber Type Settings**: Tap this item to see the index of refraction (**IR**) and **Backscatter** values for the **Fiber Type** you selected.
- **Test Limit**: The test limit specifies the limits for measurements so that the tester can give a **PASS** or **FAIL** result to the test. The **TEST LIMIT** screen shows the last 10 limits that were selected.

  For this tutorial, select **General Fiber**. If you do not see this limit on the **TEST LIMIT** screen, tap **MORE**, tap **Miscellaneous**, then tap **General Fiber**.

2-6 On the **TEST SETUP** screen, tap **SAVE**.

2-7 On the **CHANGE TEST** screen, tap the **SmartLoop OTDR** test you made, then tap **USE SELECTED**.

For more information on settings, see “Settings for OTDR Tests” on page 331.

Step 3: Turn Off the Auto Save Function

For this tutorial, you will manually save the test results.

3-1 On the home screen, tap the **Next Fiber A ID/Next Fiber B ID** panel.

3-2 On the **CHANGE ID** screen, tap the **Auto Save** control to make it show **Off**.

3-3 Stay on this screen to do the next step.

Step 4: Enter IDs for the Fibers

4-1 On the **CHANGE ID** screen, tap the **FIBER A ID:** panel.

4-2 Enter an ID for fiber A, then tap **DONE** twice.

4-3 The **CHANGE ID** screen shows the ID you entered for fiber A. For the **Fiber B ID**, the tester increments the **Fiber A ID** by one.

4-4 Tap **DONE** to save the IDs. If you see a message about an ID that is not in the list, tap **YES**.

Step 5: Set Up Launch Fiber Compensation

5-1 On the home screen, tap **SET COMP**.

5-2 On the **SET LAUNCH METHOD** screen, make sure that **SmartLoop** is selected.

5-3 Clean and inspect the OTDR port and the connectors on the three launch cords.

5-4 Make the connections shown in Figure 16.

5-5 Tap **SET**.

5-6 When the **SET LAUNCH COMP** screen shows, make sure the tester shows the correct distances for the end of the launch cord and the start of the tail cord. See Figure 17.

5-7 Tap **SAVE**. The tester shows the lengths of the three cords, and the time and date when you saved the launch compensation settings.

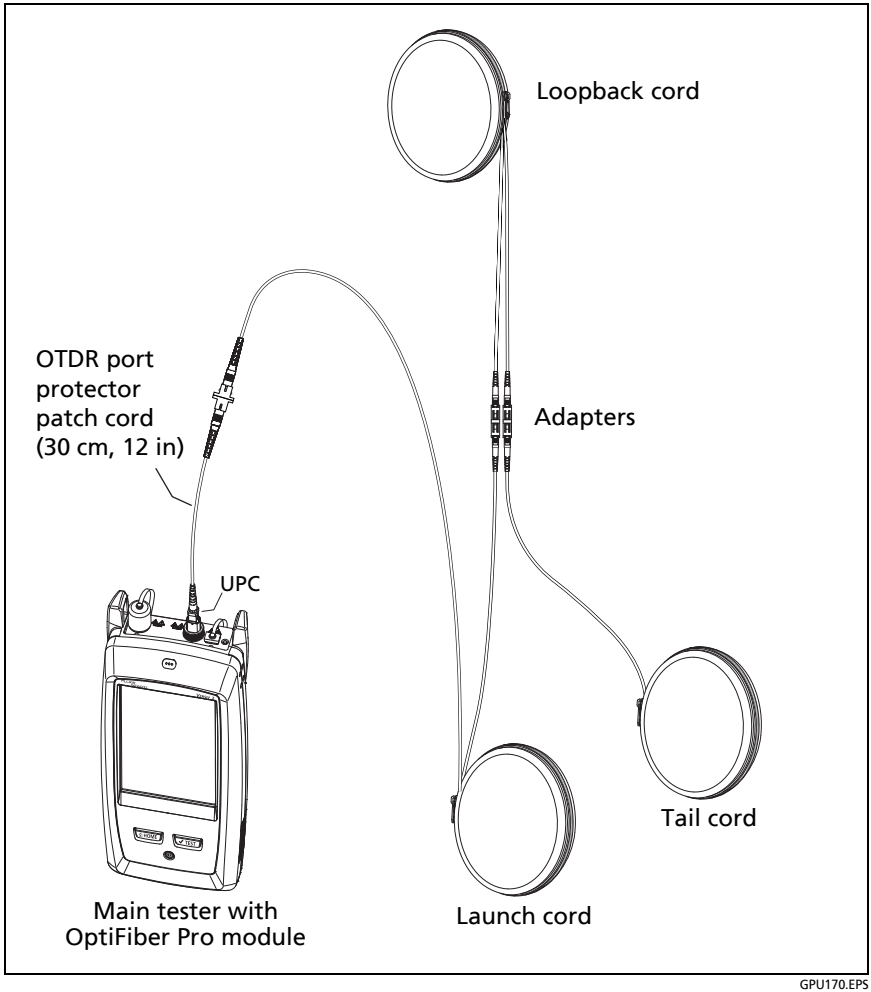

Figure 16. SmartLoop Launch Compensation Connections

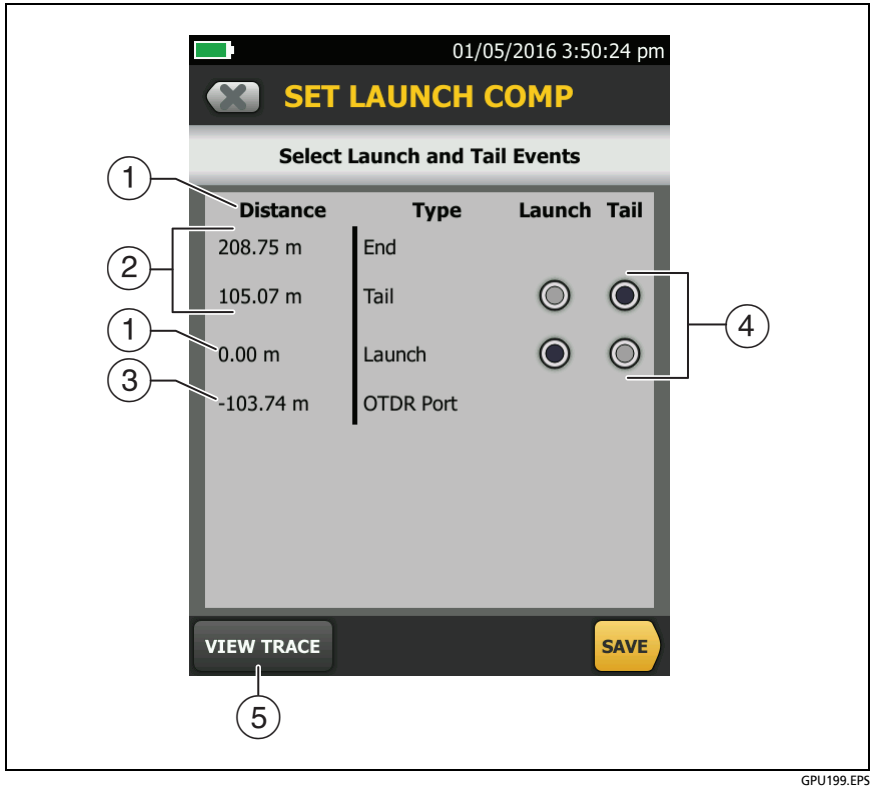

GPU199.EPS

Figure 17. SET LAUNCH COMP Screen for the SmartLoop Test

① The distances shown are relative to the end of the launch cord, which is at 0.00 m.

① The loopback cord is 105.07 m long, so the tail cord starts at 105.07 m. The length of the loopback cord plus the tail cord is 208.75 m.

② The launch cord is 103.74 m long, so the OTDR port shows at -103.74 m.

③ If you set up the launch compensation when connected to a link, you can tap the **Launch** and **Tail** buttons if necessary to select the correct locations for the ends of the launch and tail cords.

④ If necessary, you can look at the OTDR trace to identify launch and tail events and see the quality of the connections.

Step 6: Do the SmartLoop Test

6-1 Clean and inspect the connectors on the fiber link.

6-2 Connect the launch, loopback, and tail cords to the link, as shown in Figure 18 for **End 1**.

6-3 Tap **TEST** or press ✔TEST.

6-4 Halfway through the test, the tester tells you to connect the tail cord to the OTDR port. Make the connections for **End 2** as shown in Figure 18, then tap **DONE**.

⚠Caution

Switch the launch and tail connections at the end of the short patch cord. If you switch the connectors at the patch panel, you will possibly get less accurate results for those connections during the second half of the test.

Note

If the tester shows a message about the connection quality of the OTDR port, but the OTDR connection on the tester is good, inspect the ends of the loopback cord. See "Port Connection Quality for SmartLoop Tests" on page 353.

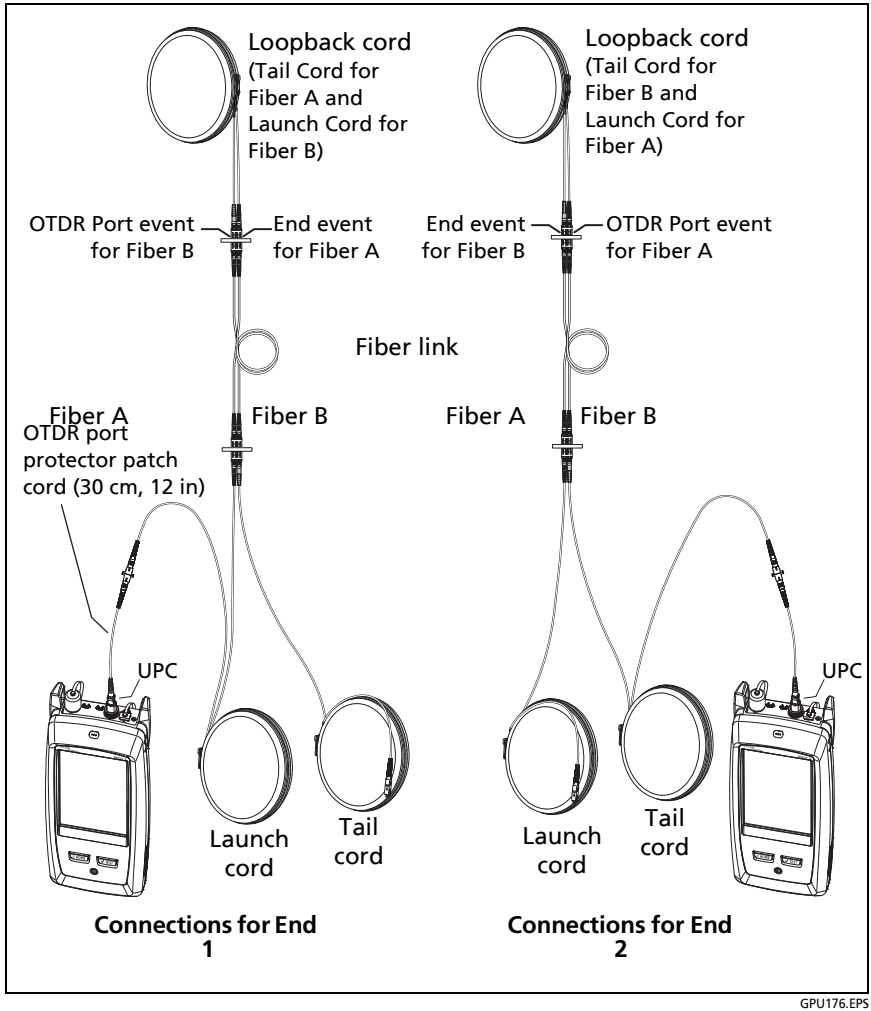

Figure 18. SmartLoop Test Connections for a Bi-directional Test

Step 7: Look at the Results

The tester shows the SmartLoop results in three formats (Figure 19):

- **EventMap**: Shows a diagram of the events on the fiber, the fiber length, and the overall loss of the fiber.

  Use this screen to quickly locate connectors and faults on the fiber. To see details for an event, tap the event on the map, then tap the information window for the event.

   Tap this button to see the results for the other fiber (**A** or **B**).

   Tap this button to see results from each direction (**End 1** or **End 2**) or the averaged results ($\overline{X}$).

  Touch  for 3 seconds to see a summary of the results from ends 1 and 2 on fibers A and B. To see the EventMap for a result in the list, tap the result.

- **TABLE**: Shows a table of the events on the fiber shown on the **EventMap**.

  Use this screen to quickly see measurements for all events and see the types of events that are on the fiber. The table includes the distance to the event, the loss of the event, the size of the reflection from the event, the type of the event, and a pass/fail status. To see details for an event, tap the event in the table.

- **TRACE**: Shows the OTDR trace for the fiber shown on the **EventMap**.

  Use this screen to examine events and make other measurements.

  Note

  *The **TRACE** tab does not show when you select averaged results on the **EventMap** screen.*

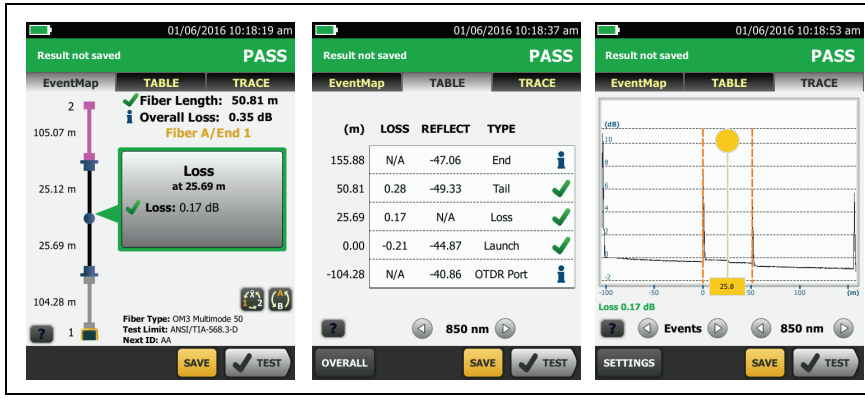

GPU26.EPS

Figure 19. Examples of the EventMap, TABLE, and TRACE Screens

Step 8: Save the Results

Tap **SAVE** (or **FIX LATER** if the test failed). The **SAVE RESULTS** screen shows the IDs you entered. You can change the IDs if necessary. Tap **SAVE** again to save the results.

Buttons to Do Tests and Save Results

When more than one button shows at the bottom of the screen, the tester highlights one in yellow to recommend which one to tap.

Note

To change the **Auto Save** *setting, tap the* **Next ID** *panel on the home screen.*

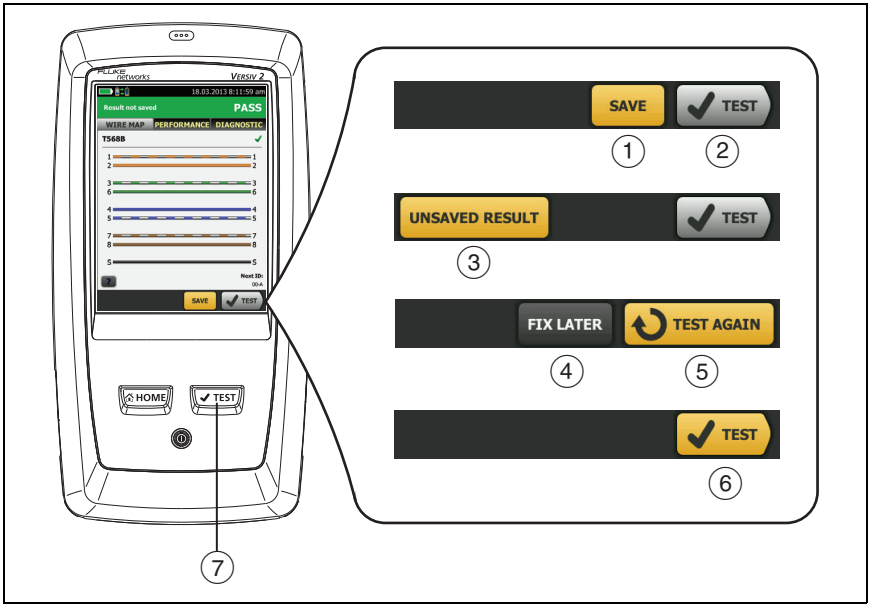

GPU40.EPS

Figure 20. FIX LATER, TEST AGAIN, and TEST Buttons and the TEST Key

① **SAVE** (yellow), ② **TEST** (gray)**:** These buttons show if the test passed and **Auto Save** is off. When you tap **SAVE**, you can save the results with an ID that you make or select. When you tap **TEST**, you can select to save the results or do the test again and not save the results.

② **UNSAVED RESULT**: This button shows if **Auto Save** is off and you go to the home screen when a test is completed. Tap this button to see the result.

③ **FIX LATER:** This button shows if the test failed or had a **PASS*** result and the result has not been saved.

④ **TEST AGAIN:** This button shows if the test failed or had a **PASS*** result. Tap this button to do the test again. If the test fails again, you can tap **FIX LATER** to save the result if necessary.

When you look at a saved result that failed, tap **TEST AGAIN** to do the test again for the same ID and with the same test settings as the saved result.

Note

*The color of the **FIX LATER** and **TEST AGAIN** buttons (yellow or gray) depends on which button you tapped the last time you did a test that failed.*

⑤ **TEST** (yellow)**:** This button shows if the test passed and **Auto Save** is on. When **Auto Save** is on, the tester saves results with the next available ID when the test is completed. When you tap **TEST**, the tester does a test for the next available ID.

⑥ ✔TEST: The ✔TEST key does the same function as the **TEST** button. When **TEST AGAIN** shows, you can press ✔TEST to do a test on the next ID.

Options for Cable IDs

When you save the test results for a cable, you usually give the results the name that is the ID for the cable. There are several methods you can use to make IDs for test results:

- You can use the **CABLE ID SETUP** screen to make a set of sequential IDs. See “Tutorial: Make a Set of Sequential Cable IDs” on page 67. When **Auto Save** is also on, the tester automatically saves each result with the next available ID in the set.

  A cable ID set also lets you use IDs again so you can add different results to tests you saved before.

- You can enter an ID each time you do a test. To do this, turn off the **Auto Save** function (see page 67). Each time a test is completed, tap **SAVE** (if the test passed) or **FIX LATER** (if the test failed), then enter an ID manually.

- You can use LinkWare PC software to make a set of IDs, download the set to the tester, then import it into a project. See “Import an ID Set into a Project” on page 582.

- After you do a test, you can enter the ID for a test you saved before. This lets you replace results or add different results to a test you saved before.
- If the test failed before, and you saved the results, you can select it on the **RESULTS** screen, then press **TEST AGAIN** to replace the results for that ID.

Notes

Cable IDs are case-sensitive. For example, the tester saves result with the names "A0" and "a0" in two different records.

Cable IDs can have a maximum of 60 characters.

If you delete all the ID sets in a project, the tester makes a default set that starts with 001.

Automatic Increment Function for Cable IDs

Each time you save a result, the tester automatically saves the result with the next ID in the set. It is not necessary for the IDs in a set to be sequential. For example, an ID set that you make with LinkWare PC or LinkWare Live software can have these non-sequential IDs:

B-1A

B-1B

RFS-A

RFS-B

CAM1-A

CAM1-B

After you save results for all IDs in a set, the auto increment function does not operate. You must manually enter an ID each time you save a result, unless you select a different ID set.

If you enter an ID when you save a test, and the ID is not in the sequence of the set, the tester uses that ID, then goes back to the next ID in the set.

Auto Save Function

The **Auto Save** function automatically saves results after each test. This function decreases the time necessary to do a job.

To turn the Auto Save function on or off

1. On the home screen, tap the **Next ID** panel.
2. On the **CHANGE ID** screen, tap the **On/Off** control next to **Auto Save**.
3. If **Auto Save** is on and the test passed, the tester saves the results with the next available ID in the set.

If **Auto Save** is on and the test failed:

- To saved the failed result before you do a test for the next ID, tap **FIX LATER**.
- To do the test again for the same ID, tap **TEST AGAIN**.

You can also change the **Auto Save** setting on the **SAVE RESULTS** screen. You can see this screen after you run a test.

Tutorial: Make a Set of Sequential Cable IDs

You can make a set of sequential cable IDs to use when you save test results. When you save results, you can use the next ID in the set as the name for the results, or you can select another ID in the set.

When you make an ID set, you enter the first and last IDs in the set. The tester increments the characters that are different in the first and last IDs. For example, the first and last IDs "TELECOM-A1" and "TELECOM-B2" make a set with four IDs:

TELECOM-A1

TELECOM-A2

TELECOM-B1

TELECOM-B2

You can make up to 50 cable ID sets with up to 5000 IDs total for all sets. An ID can have a maximum of 60 characters. Accented characters and symbols, such as the asterisk, do not increment.

Note

When you make an ID set, the tester saves it in the project shown on the home screen. For information on projects, see Chapter 17.

To make a set of sequential IDs

Example: You will do tests on four cables (A through D) in 10 rooms (01 through 10) on the first and second floors, for a total of 80 cables.

1. On the home screen, tap the **PROJECT** panel.
2. To save the ID set in a different project, tap **CHANGE PROJECT**, then tap a project.
3. On the **PROJECT** screen, tap **NEW ID SET**.
4. On the **CABLE ID SETUP** screen, tap the **First ID** panel, then use the keyboard to enter the first ID in your sequential set. For this example, enter 1-01-A.
5. Tap the **Last ID** panel, use the keyboard to enter the last ID in your sequential set, then tap **DONE**. For this example, enter 2-10-D.

6 Under **Select Media**, tap **Copper** or **Fiber** to specify the type of tests that will use the IDs.

For IDs for fiber tests: Under **Fiber**, select the tests that are necessary for the project. These selections let you use the **% Tested** value on the home screen to monitor the progress of the project. See Figure 208 on page 554.

7 To see the ID set, tap **REVIEW**.

8 On the **CABLE ID REVIEW** screen or the **CABLE ID SETUP** screen, tap **Save**.

About Projects

The ProjX™ management system lets you set up a project to specify the settings necessary for a job, to monitor the status of a job, and organize your test results. See Chapter 17.

The tester saves your settings and test results in the **DEFAULT** project, unless you select a different project.

The LinkWare Live web application lets you manage projects from a desktop or mobile device.

To get started with LinkWare Live, see Chapter 18.

About LinkWare Live

The LinkWare Live web application lets you manage projects from a desktop or mobile device.

To get started with LinkWare Live, see Chapter 18.

Chapter 3: Certify Twisted Pair Cabling

Overview of the DSX CableAnalyzer Modules

⚠⚠Warning

Before you use the tester, read the safety information that starts on page 5.

The Fluke Networks DSX CableAnalyzer™ modules attach to Versiv™ and Versiv 2 main and remote testers to make rugged, hand-held testers that let you certify, troubleshoot, and document twisted pair network cabling. The testers includes these features:

The modules include these features:

- DSX-8000 modules certify twisted pair cabling to Cat 8/Class I/II limits (2000 MHz) in less than 16 seconds.
- DSX-5000 CableAnalyzer modules certify twisted pair cabling to Cat 7_A/Class F_A limits (1000 MHz) in less than 15 seconds.
- Gives a **PASS** or **FAIL** result based on a test limit that you specify.
- AxTalk software, which is available on the Fluke Networks website, lets you do tests for alien crosstalk.

DSX CableAnalyzer Connectors, Keys, and LEDs

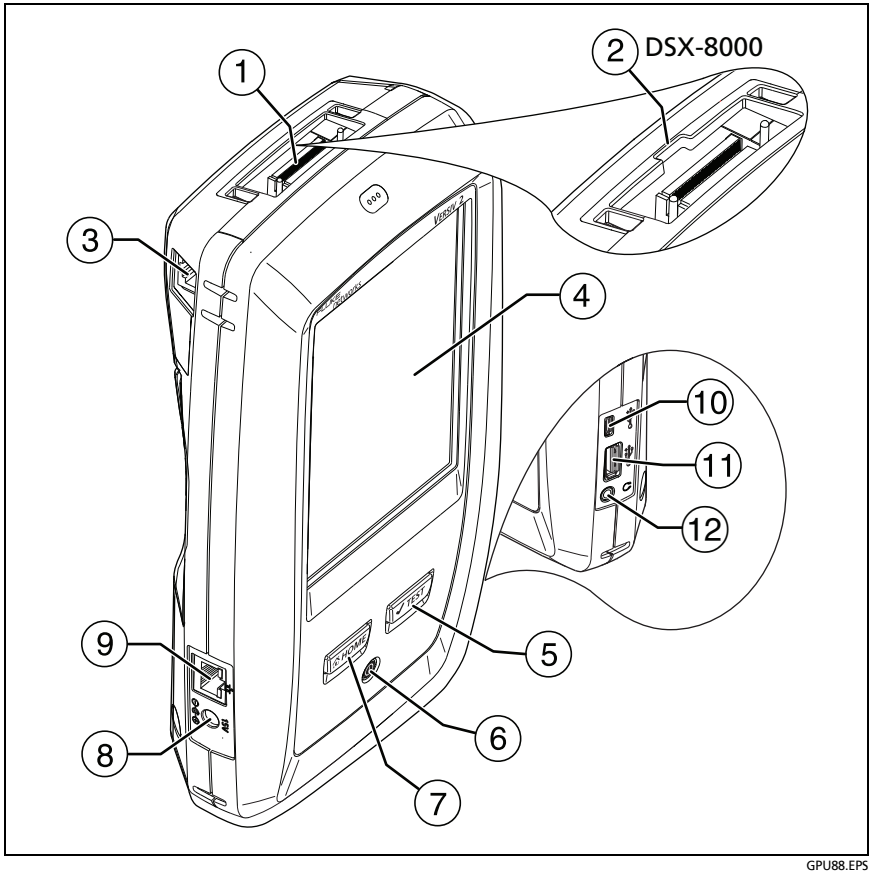

Figure 21. Main DSX Tester Connectors, Keys, and LEDs (Versiv 2 shown)

① Connector for a link interface adapter

② DSX-8000 modules have a recess for the tabs on Cat 8/Class I/II adapters. You cannot attach Cat 8/Class I/II adapters to DSX-5000 modules.

③ RJ45 jack for communications between the main and remote testers when you do alien crosstalk measurements. See "About the AxTalk Analyzer Kit" on page 161.

④ LCD display with touchscreen

⑤ ✔TEST: Starts a test. To start a test, you can also tap **TEST** on the display. The tone generator turns on if a remote tester is not connected to the main tester. See "How to Use the Tone Generator" on page 158.

⑥ ⏻: Power button. Versiv 2: The LED in the button shows the status of the battery charging process. See Table 2 on page 19.

⑦ HOME: Press HOME to go to the home screen.

⑧ Connector for the AC adapter. Versiv: The LED is red when the battery charges, and green when the battery is fully charged. The LED is yellow if the battery will not charge. See "Charge the Battery" on page 18.

⑨ RJ45 connector: Lets you connect to a network for access to Fluke Networks cloud services.

⑩ Micro USB port: This USB port lets you connect the tester to a PC so you can upload test results to the PC and install software updates in the tester.

⑪ Type A USB port: This USB host port lets you save test results on a USB flash drive and connect the video probe to the tester. On a Versiv main tester, this port lets you connect a Wi-Fi adapter for access to Fluke Networks cloud services. (Versiv 2 testers have an internal Wi-Fi radio.)

⑫ Headset jack. See "How to Use the Talk Function" on page 160.

Note

If you have two main testers, you can use one as a remote. To select the remote function, tap ***TOOLS*** *>* ***Main as Remote****.*

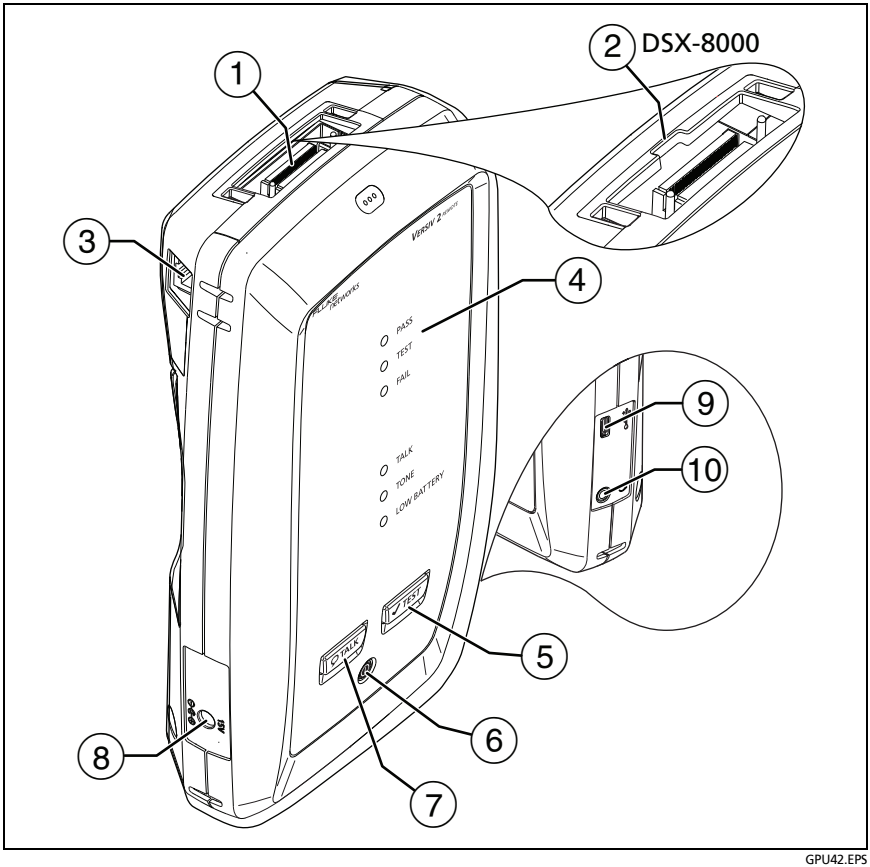

GPU42.EPS

Figure 22. Remote DSX Tester Connectors, Keys, and LEDs (Versiv 2 shown)

① Connector for a link interface adapter

② DSX-8000 modules have a recess for the tabs on Cat 8/Class I/II adapters. You cannot attach Cat 8/Class I/II adapters to DSX-5000 modules.

③ RJ45 jack for communications between the main and remote testers when you do alien crosstalk measurements. See "About the AxTalk Analyzer Kit" on page 161.

④ **PASS** LED comes on when a test passes.

TEST LED flashes during a test.

FAIL LED comes on when a test fails.

TALK LED comes on when the talk function is on (⑦). The LED flashes until the main tester accepts the request to talk. See "How to Use the Talk Function" on page 160.

TONE LED flashes and the tone generator comes on if you press ✔TEST when a main tester is not connected to the remote. See "How to Use the Tone Generator" on page 158.

LOW BATTERY LED comes on when the battery is low. The LEDs also have these functions:

- Battery gauge (see Figure 3 on page 21)
- Volume indicator for the **TALK** function
- Progress indicator for software updates

⑤ ✔TEST: Starts a test. Turns on the tone generator if a main tester is not connected to the remote. See "How to Use the Tone Generator" on page 158.

⑥ ⏻: Power button. The LED in the power button shows the status of the battery charging process. See Table 2 on page 19.

⑦ TALK: Press TALK to use the headset to speak to the person at the other end of the link. See "How to Use the Talk Function" on page 160.

⑧ Connector for the AC adapter. Versiv: The LED is red when the battery charges, and green when the battery is fully charged. The LED is yellow if the battery will not charge. See “Charge the Battery” on page 18.

⑨ Micro USB port: This USB port lets you connect the tester to a PC so you can upload test results to the PC.

⑩ Headset jack. See “How to Use the Talk Function” on page 160.

About Link Interface Adapters

Link interface adapters let you connect the DSX CableAnalyzer to different types of twisted pair links. Figure 23 shows how to attach and remove adapters.

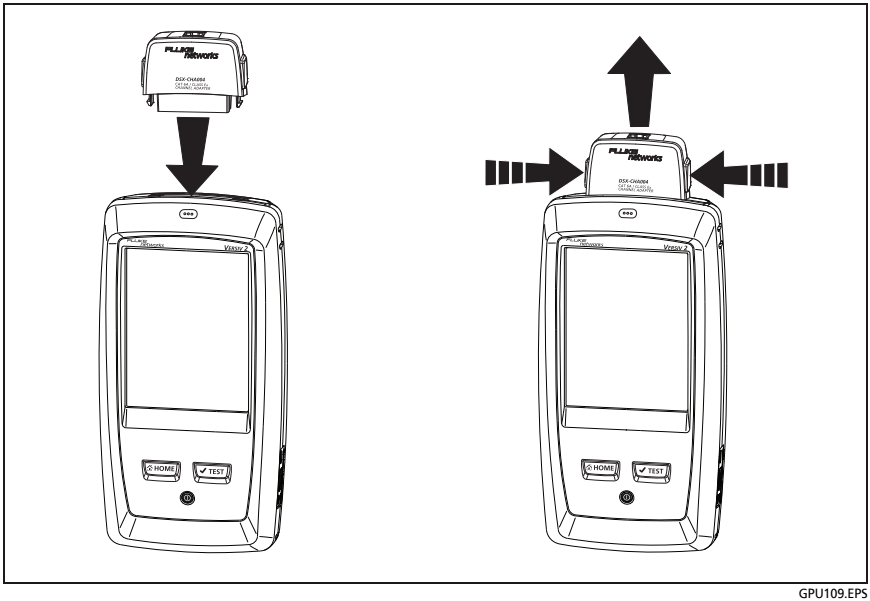

GPU109.EPS

Figure 23. How to Attach and Remove Link Interface Adapters

How to Prevent Damage to the Adapter Cables

⚠Caution

To prevent damage to the cables on the permanent link adapters and to make sure your test results are as accurate as possible, do not twist, pull on, pinch, crush, or make kinks in the cables. See Figure 24 on page 77.



Figure 24. How to Prevent Damage to the Permanent Link Adapter Cables

Adapters for DSX-8000 and DSX-5000 Modules

You can use adapters for test limits up to Cat 7_A/Class F_A and coaxial adapters with DSX-8000 and DSX-5000 modules. Be sure to select a test limit that is appropriate for the adapter.

Cat 8/Class I and Class II adapters, such as the DSX-PLA804 and DSX-PLA-8-TERA, have tabs that lets you attach them only to DSX-8000 modules (see Figure 25).

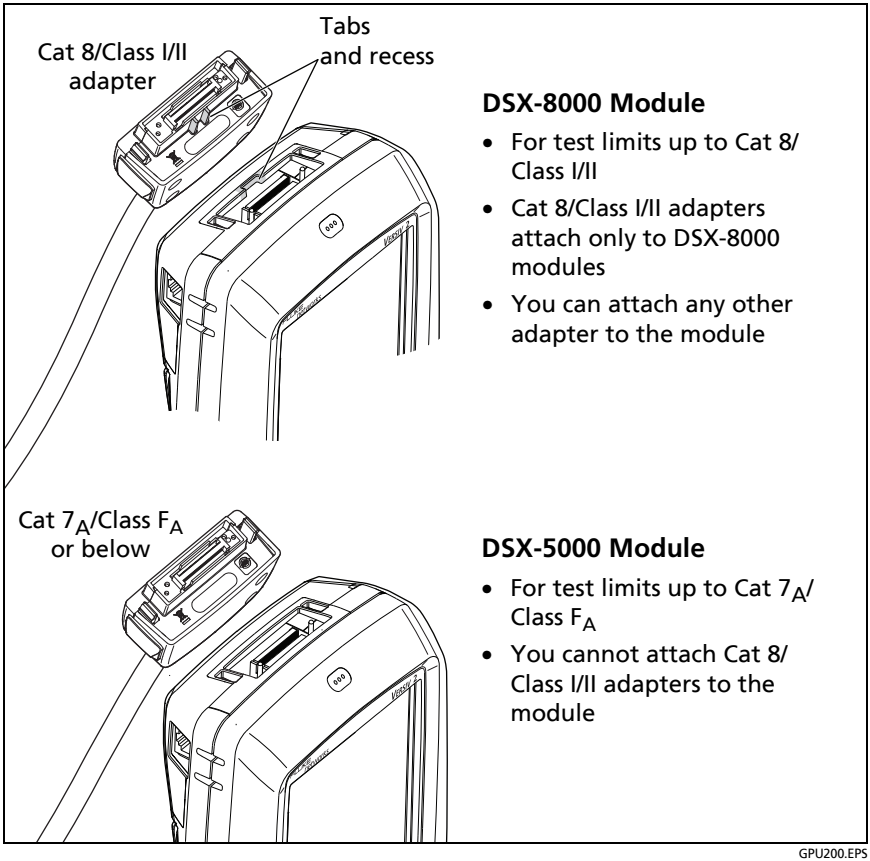

Figure 25. DSX-8000 and DSX-5000 Module and Adapter Differences

The DSX CableAnalyzer Home Screen

The home screen (Figure 26) shows important test settings. Before you do a test, make sure these settings are correct.



GPU110.EPS

Figure 26. The Home Screen for DSX CableAnalyzer

① **PROJECT**: The project contains the settings for a job and helps you monitor the status of a job. When you save test results, the tester puts them in the project. Tap the **PROJECT** panel to edit the project settings, select a different project, or make a new project.

② Shows a summary of the test results in the project:

 The number of tests that passed.

 The number of tests that failed.

 The number of results from tests on twisted pair cable that have **PASS*** results. **PASS*** results have measurements within the range of accuracy uncertainty for the tester. See "PASS*/ FAIL* Results" on page 101.

③ The test setup panel shows the settings the tester will use when you tap **TEST** or press TEST. To change these settings, tap the panel.

Note

You can set up tests for any module that the tester can use, even when no module is attached.

④ Icons show the status of the **Store Plot Data** and **AC Wire Map** settings. See Table 3 on page 86.

⑤ **Next ID**: The **Next ID** panel shows the ID that the tester gives to the next test results you save.

Tap **Next ID** to do these tasks:

- Enter an ID, select a different ID in the ID set, select a different set of IDs, or make a new set. The tester adds the IDs and ID sets you make to the project that shows on the home screen.
- Turn **Auto Save** on or off.

⑥ **Operator**: The name of the person who does the job. You can enter a maximum of 20 operator names. For each operator you can also enter the email address that the operator will use as an ID to sign in to LinkWare Live.

⑦ **TOOLS**: The **TOOLS** menu lets you set the reference, see the status of the tester, and set user preferences such as the language and the display brightness.

⑧ **RESULTS**: Tap **RESULTS** to see and manage the results that are saved in the tester.

⑨ **SYNC**: To upload results to LinkWare Live, tap **SYNC**. See Chapter 18.

⑩ **TEST**: Tap **TEST** to do the test shown in the test setup panel.

⑪ The percentage of the tests in the project that are completed. The tester uses the number of available IDs to calculate this percentage. See Figure 209 on page 556. **% Tested** does not show if your project contains only a **Next ID** list. See "To Make ID Sets with International Characters" on page 581 for more information about the **Next ID** list.

⑫ The type of module attached to the tester.

⑬  This icon shows when the tester's link interface adapter is connected to the adapter on a remote and the remote is turned on.

 DSX-5000 only: The arrows on the remote connection icon are orange when the main and remote use long-range communication mode. See "Long-Range Communication Mode (DSX-5000)" on page 161.

⑭  The asset management icon shows when the owner of a LinkWare Live account has enabled the asset management service for the tester. See “Sign Your Tester Out of LinkWare Live” on page 597.

⑮  This icon shows when the talk function is on. See “How to Use the Talk Function” on page 160.

Make Sure Your Tester is Ready to Certify Twisted Pair Cabling

To make sure your tester meets its accuracy specifications, follow these guidelines:

- Keep the tester’s software current. The latest software is available on the Fluke Networks website. See “Update the Software” on page 619.
- At a minimum, set the reference for the twisted pair adapters every 30 days. Because this procedure includes a self test and helps ensure maximum accuracy of test results, the best practice is to set the reference each day. See “Set the Reference” on page 83.
- Make sure you select the correct cable type for the job, and that the NVP for the cable is correct. See Table 3 on page 85.
- Make sure you select the correct test limit for the job. See Table 3 on page 85.
- Make sure the cords and connectors for all test equipment and patch cords are in good condition.
- Make sure the battery is fully charged.
- Send the modules to a Fluke Networks service center every 12 months for factory calibration.

Set the Reference

The reference procedure for twisted pair cable sets the baseline for insertion loss, ACR-F, and DC resistance measurements.

Set the reference at these times:

- When you want to use the tester with a different module. The tester can save reference values for eight different pairs of modules.
- When you attach Class F/F_A link interface adapters, such as the optional DSX-PLA011 TERA™ adapters.
- Every 30 days, at minimum. To ensure maximum accuracy of test results, set the reference daily.

  It is not necessary to set the reference when you change the link interface adapters (unless you attach Class F/F_A link interface adapters).

To set the reference

1 Install DSX modules in the tester and the remote.

2 Turn on the tester and the remote a minimum of 5 minutes before you set the reference.

Note

Set the reference only after the testers are at an ambient temperature between 50 °F and 104 °F (10 °C and 40 °C).

3 Use the appropriate adapters or a reference artifact to connect the main and remote testers together as shown in Figure 27.

4 On the home screen, tap **TOOLS**, then tap **Set Reference**.

5 On the **SET REFERENCE** screen tap **TEST**.

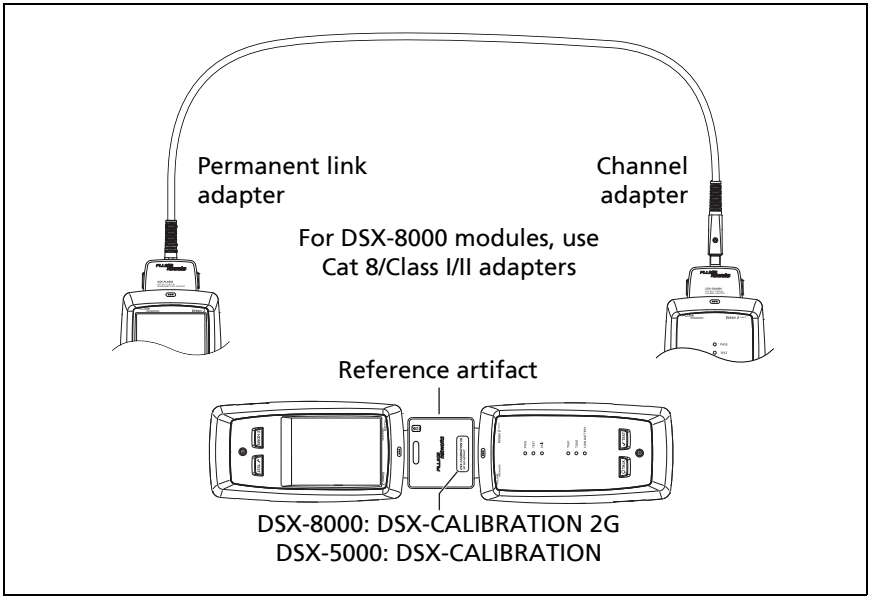

Figure 27. Reference Connections for Twisted Pair Cable

Settings for Twisted Pair Tests

Table 3 gives descriptions of the settings for twisted pair tests. To set up a project, which includes the settings in Table 3, cable IDs, and operator names, see Chapter 17.

To set up a twisted pair test

1 On the home screen, tap the test setup panel.

2 On the **CHANGE TEST** screen, select a twisted pair test to change, then tap **EDIT**.

Or to set up a new twisted pair test, tap **NEW TEST**. If no module is installed, the **MODULE** screen shows. Tap the correct copper module.

3 On the **TEST SETUP** screen, tap the panels to change settings for the test. See Table 3.

4 On the **TEST SETUP** screen, tap **SAVE** when your test setup is completed.

5 On the **CHANGE TEST** screen, make sure the button next to the test is selected, then tap **USE SELECTED**.

Table 3. Settings for Twisted Pair Tests

Setting	Description
Module	Select **DSX-8000 CableAnalyzer** or **DSX-5000 CableAnalyzer**. See 25 on page 78.
Cable Type	Select a cable type that is correct for the type you will test. To see a different group of cable types, tap **MORE**, then tap a group. To make a custom cable type, select **Custom** in the **Cable Groups** list. See Chapter 19 for details.
NVP	Nominal velocity of propagation. The tester uses the NVP and the propagation delay to calculate the length of the cable. The default value is defined by the selected cable type and is the typical NVP for that cable type. To enter a different value, tap the **NVP** panel, then tap or on the **NVP** screen to increase or decrease the value. To find the actual value for a cable, connect a known length of the cable to the tester, tap **MEASURE** on the **NVP** screen, then change the NVP until the measured length matches the known length. Use a cable at least 30 m (100 ft) long. When you increase the NVP value, the calculated length increases.

Table 3. Settings for Twisted Pair Tests (continued)

Shield Test	This setting shows only when you select a shielded cable type. **On**: The wire map test includes a DC test for shield continuity and AC tests for shield quality. The wire map test fails if the shield is open or the AC test results are unsatisfactory. *Note* *The shield test can show an open shield even when a DC resistance test shows continuity. This can happen, for example, if the shield is open but grounded at both ends or the shield fails tests at high frequencies.* **Off**: The wire map shows the shield if the shield has continuity. The tester does not do AC tests for shield quality. The wire map test does not fail or show the shield if the shield is open.
Test Limit	Select the correct test limit for the job. To see a different group of limits, tap **MORE**, then tap the name of a group.
Store Plot Data	**Off** : The tester does not save plot data for frequency-domain tests or for the HDTDR/HDTDX analyzers. You can see the plots before you save the test and exit the results screen. The saved results show frequency-domain measurements in a table and do not include the HDTDR/HDTDX plots. **On** : The tester saves plot data for all frequency-domain tests required by the selected test limit and for the HDTDR/HDTDX analyzers.

Table 3. Settings for Twisted Pair Tests (continued)

HDTDR/HDTDX	**Fail/Pass* only:** The tester shows HDTDR and HDTDX analyzer results only for Autotests with **PASS***, **FAIL***, or **FAIL** results. **All Autotests:** The tester shows HDTDR and HDTDX analyzer results for all Autotests. **Never:** The tester never shows HDTDR or HDTDX analyzer results. This setting also disables the automatic diagnostics, so the **FAULT INFO** screens never show. To get HDTDR/HDTDX analyzer results you can also tap **Tools** > **Diagnostics**. For more information about the HDTDR and HDTDX analyzers, see Chapter 6.
Bi-directional	This setting shows only when you select a patch cord test limit. It is used mainly by patch cord manufacturers to make the Autotest time shorter. **On:** The tester does tests in both directions. **Off:** The tester does tests in only one direction, which decreases the Autotest time.
Outlet Configuration	The **Outlet Configuration** specifies which wire pairs are tested and which wire numbers the wire map shows for the pairs. See Figures 28 and 29. To see the wire map for a configuration, tap **Outlet Configuration**, tap the configuration name on the **OUTLET CONFIG** screen, then tap **SAMPLE**. To select a configuration, tap a name on the **OUTLET CONFIG** screen, then tap **USE SELECTED**. *Note* *The **OUTLET CONFIG** screen shows only the configurations that are applicable to the selected **Test Limit**.* To make a custom outlet configuration, tap **CUSTOM** on the **OUTLET CONFIG** screen, then tap **MANAGE**, then tap **Create**. See Chapter 19 for details.

Table 3. Settings for Twisted Pair Tests (continued)

AC Wire Map	The **AC Wire Map** test lets you do tests on links connected through midspan PoE (Power over Ethernet) devices. See Chapter 4. When the **AC Wire Map** test is on, this icon shows on the home screen:  *Notes* *Always turn off the AC wire map test when you will not do tests through a PoE device. The AC wire map test increases the time for an Autotest. It also disables the resistance and shield continuity tests.* ***AC Wire Map** is not available when a DSX-8000 module is installed. The DSX-8000 modules do not support the AC wire map test.*

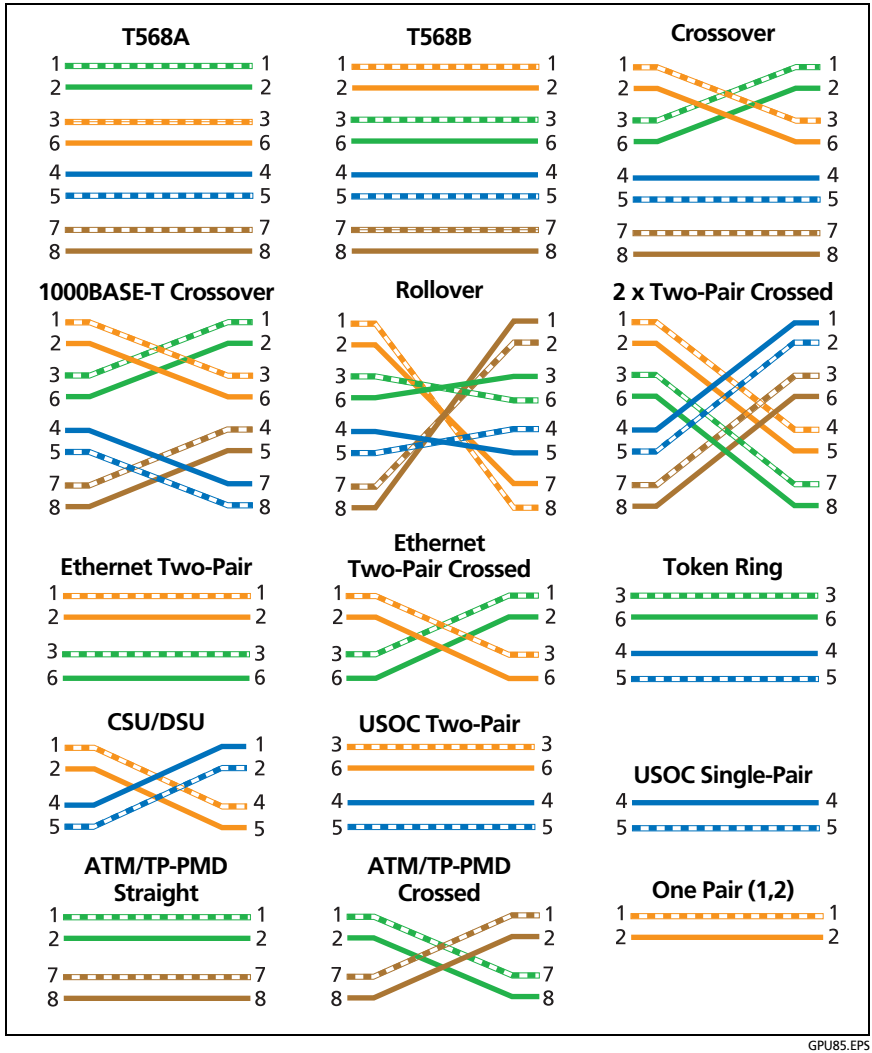

GPU85.EPS

Figure 28. Outlet Configurations - RJ45

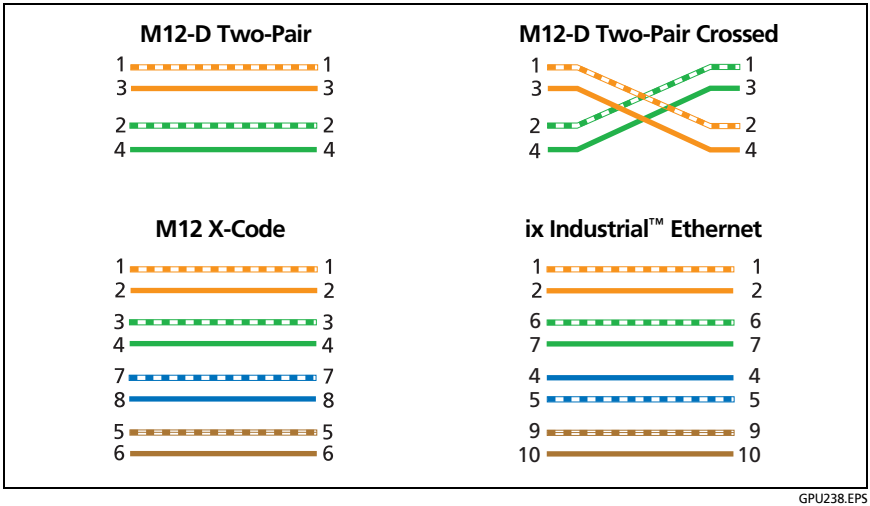

Figure 29. Outlet Configurations - Industrial Ethernet

How to Do an Autotest

When you tap **TEST** on the main tester or press TEST on the main or remote tester, the testers do an Autotest. The Autotest includes all the tests necessary to certify that the cabling meets or exceeds the performance requirements specified in the selected test limit.

Figure 30 shows the equipment for Autotests on twisted pair cable.

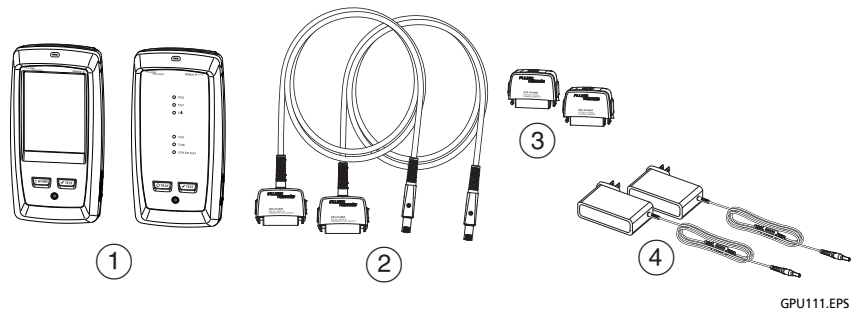

① Main and remote testers with DSX CableAnalyzer modules installed

② For tests on permanent links: two permanent link adapters (PRO model or optional)

③ For tests on channels: two channel adapters

④ AC adapters (optional)

Figure 30. Equipment for Autotests on Twisted Pair Cable

Note

If you have two main testers, you can use one as a remote. To select the remote function, tap ***TOOLS*** *>* ***Main as Remote****.*

To do an Autotest on twisted pair cable

1. Attach permanent link or channel adapters to the main and remote testers.
2. Make sure that the home screen shows the correct settings for the job.

   To make sure that other settings are correct, tap the test setup panel, make sure the correct test is selected on the **CHANGE TEST SCREEN**, then tap **EDIT** to see more settings. Table 3 on page 85 describes the settings.
3. Connect the testers to the link as shown in Figure 31, 32, 33, or 34.
4. Tap **TEST** on the main tester or press ✔TEST on the main or remote tester.

   If the tester at the other end of the cable is in sleep mode or is off, your tester's tone generator turns on the other tester.

   If the two testers are not connected:

   - Your tester's tone generator stays on so you can use a tone probe to find the cable to connect to the other tester.
   - Or, tap **MEASURE** to do the tests that do not require a remote tester. Because the tester cannot complete all tests and some tests always fail with no remote connected, the result for an Autotest without a remote is always **FAIL**.

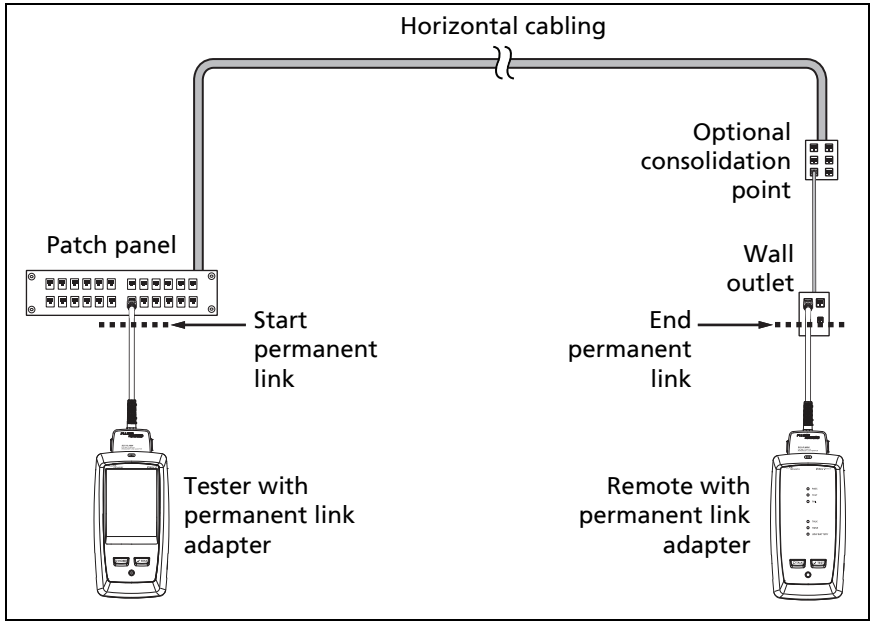

Figure 31. Permanent Link Connections for Links Up to Cat F_A

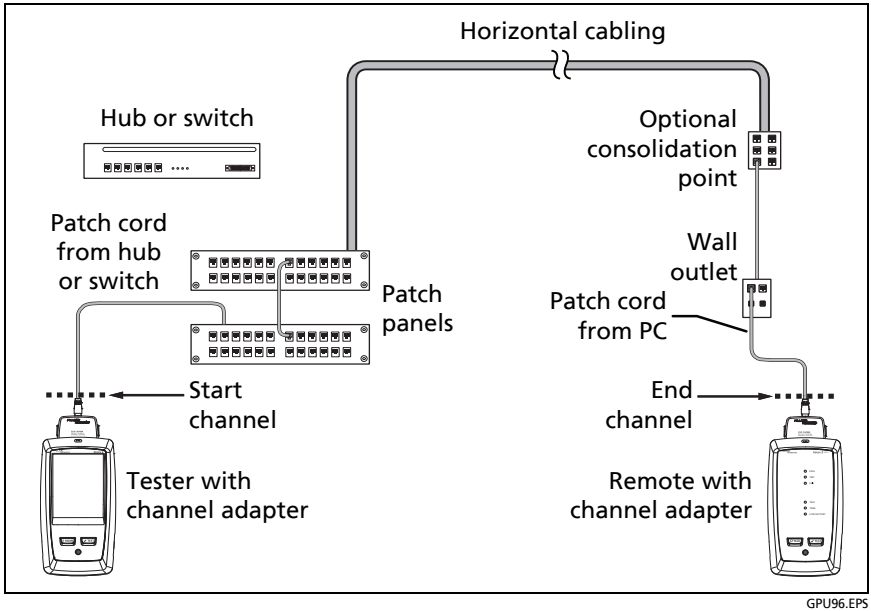

Figure 32. Channel Connections for Links Up to Cat F_A

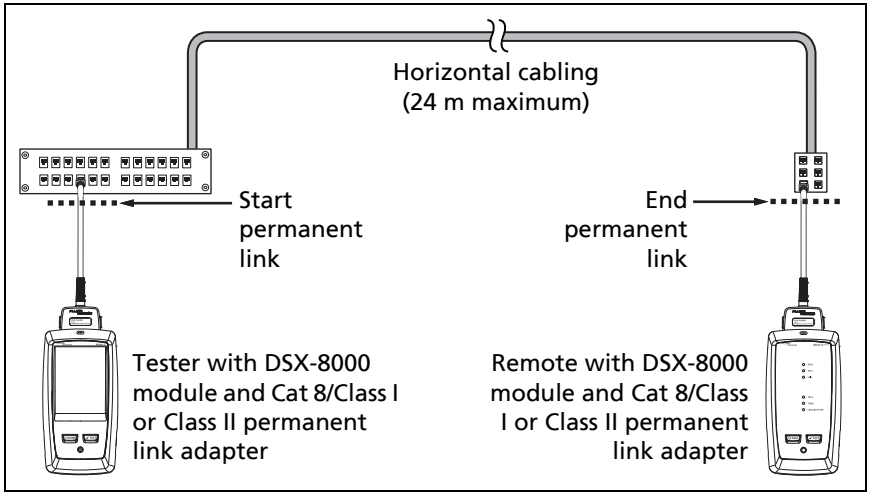

Figure 33. Permanent Link Connections for Cat 8/Class I/II Links

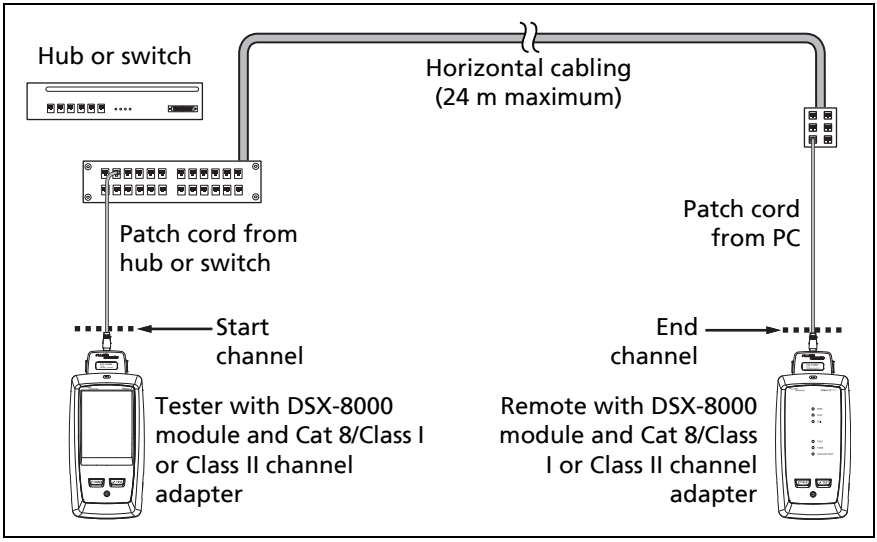

Figure 34. Channel Connections for Cat 8/Class I/II Links

"Bad Patch Cord" Message

To comply with standards for tests on channels, the tester removes the effects of the channel adapters and their connections from the test results. Before it removes these effects, the tester makes sure that the plugs on the patch cord do not have too much near-end crosstalk (NEXT). Too much NEXT is frequently caused by too much untwisted wire in the plug. If a plug is bad, the tester shows the message **Bad patch cord at main** or **Bad patch cord at remote**, and does not remove the effects of the channel adapters and their connections. The tester saves the message with the results.

If you see one of these messages, replace the patch cord or install a new plug at the bad end.

How to Certify Patch Cords

To certify patch cords, you must use the DSX-PCxx Patch Cord Adapters and the correct patch cord test limit. You cannot use channel adapters and test limits to certify patch cords because channel tests do not measure the performance of the patch cord plugs.

To purchase a DSX-PCxxS Patch Cord Adapter Set, contact an authorized Fluke Networks distributor.

How to Certify Modular Plug Terminated Links

Modular plug terminated links (MPTL) are terminated with an RJ45 connector instead of a jack. These links are used where it is best to connect the horizontal cabling directly to the far-end device. For example, the connection to a security camera is less likely to be unplugged when it is behind a wall, rather than exposed at a faceplate near the camera.

To test an MPTL, use a permanent link adapter and a DSX patch cord adapter, as shown in Figure 35. The patch cord adapter makes the test include results from the RJ45 connection at the remote end of the link.

Use the DSX patch cord adapter and test limit that match the category of the cable in the link:

- Cat 6A links: DSX-PC6A with the **TIA Cat 6A MTPL** test limit
- Cat 6 links: DSX-PC6 with the **TIA Cat 6 MTPL** test limit
- Cat 5e links: DSX-PC5e with the **TIA Cat 5e MTPL** test limit

⚠Caution

To avoid unreliable test results, do not use a channel adapter on the remote tester. If you do, your test results will not include the RJ45 connection at the far end of the link.

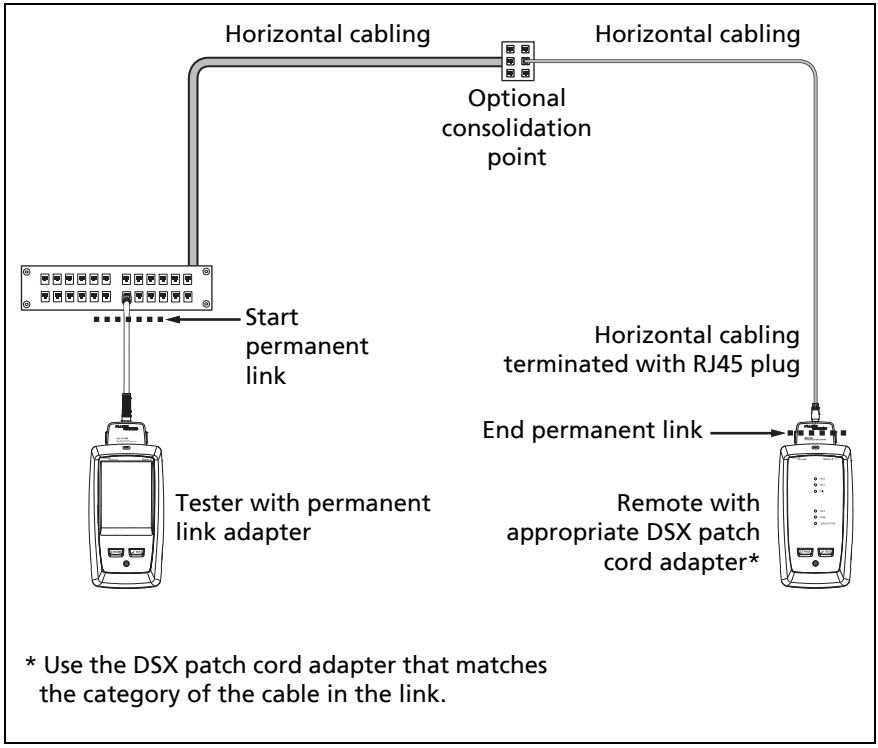

Figure 35. Connections for Modular Plug Terminated Links (MPTL)

Twisted Pair Autotest Results

The tests listed below apply to twisted pair cabling.

Note
Some tests are not included in some test limits.

- Wire map
- Resistance
- Resistance unbalance in a pair (in limits with **(+PoE)** and others)
- Resistance unbalance between pairs (in limits with **(+PoE)** and others)
- Length
- Propagation delay
- Delay skew
- Insertion loss (attenuation)
- Impedance
- NEXT (near-end crosstalk)
- PS NEXT (power-sum near-end crosstalk)
- ACR-N (attenuation to crosstalk ratio at the near end)
- PS ACR-N (power-sum attenuation to crosstalk ratio, near end)
- ACR-F (attenuation to crosstalk ratio at the far end)
- PS ACR-F (power-sum attenuation to crosstalk ratio, far end)
- Return loss
- TCL (transverse conversion loss, in limits with **(+All)**)
- CDNEXT (common-mode to differential-mode near-end crosstalk, in limits with **(+All)**)
- CMRL (common-mode return loss, in limits with **(+All)**)
- ELTCTL (equal level transverse conversion transfer loss, in limits with **(+All)**)
- HDTDR and HDTDX analyzers (optional tests, not required by any test limit. See Chapter 6.)

Automatic Diagnostics

If an Autotest on twisted pair cabling fails, the DSX CableAnalyzer automatically gives you information about faults. To see the information, tap the **FAULT INFO** tab. Figure 36 shows examples of fault information. For more information, see Chapter 6.



GPU192.EPS

Figure 36. Examples of Fault Information Screens

PASS*/FAIL* Results

A result shows an asterisk when measurements are in the tester's accuracy uncertainty range (Figure 37) and the asterisk is required by the selected test limit. These results are marginal.

- A **PASS*** shows that the cable's performance is satisfactory. If a cable must get a **PASS** result to agree with your requirements for quality, identify and correct the problems with the cable and do the Autotest again.
- Usually, a **FAIL*** is not a satisfactory result. The tester shows a **FAIL** for the overall result. Identify and correct the problems with the cable and do the Autotest again.

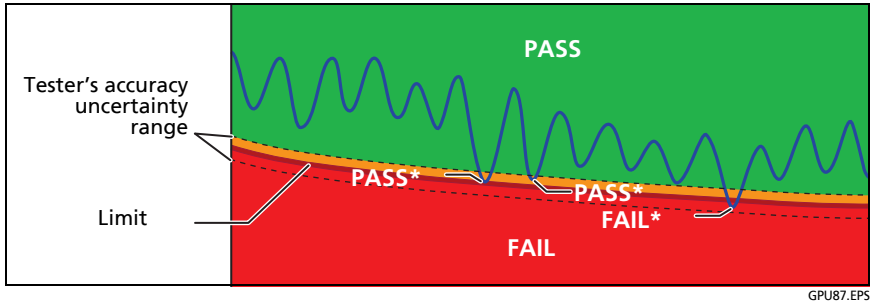

Figure 37. PASS* and FAIL* Results

WIRE MAP Tab

The **WIRE MAP** tab shows the connections between the ends of the cable under test. The tester compares the connections to the selected **Outlet Configuration** to get a **PASS** or **FAIL** result.

If the wire map test fails, you can continue or stop the Autotest. Or, you can tap **SCAN ON** to do the wire map test continuously while you look for the fault. To continue the Autotest after you correct the fault, tap **SCAN OFF**, then tap **CONTINUE**.

If you leave then return to the **WIRE MAP FAIL** screen, the **SCAN ON** button goes away. To see the button again, tap **TEST AGAIN**. You can also select the continuous wire map test as a single test from the **TOOLS** menu. See “Continuous Tests” on page 114.

Figures 38, 39, 40, and 41 show examples of wire map screens. For information on AC wire map screens, see Chapter 4.

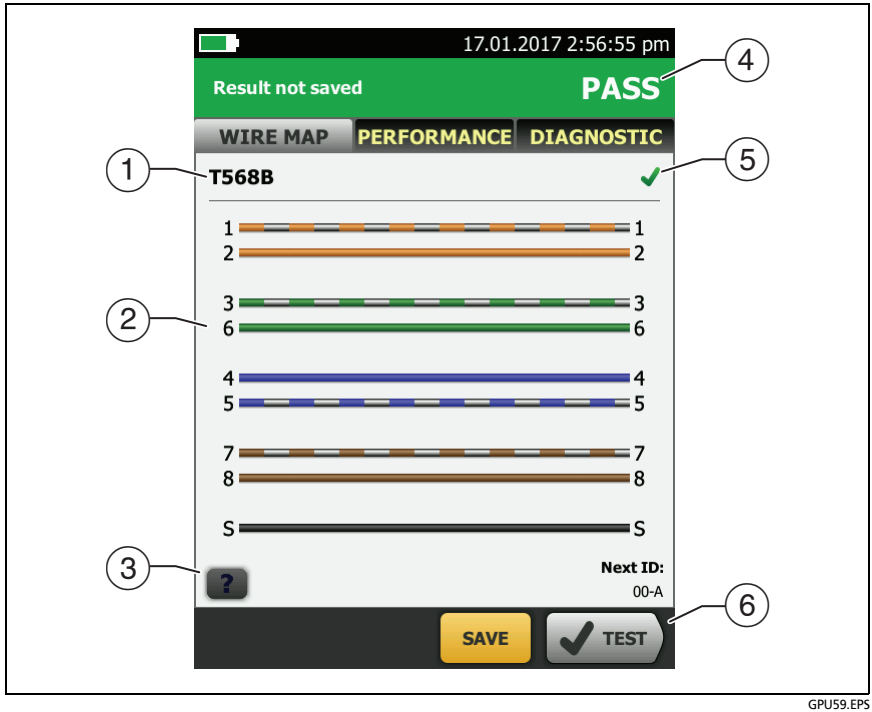

Figure 38. WIRE MAP Tab

① The name of the outlet configuration used for the test. The outlet configuration is a setting on the **TEST SETUP** screen.

② The wire map of the cabling. The main tester is at the left side of the wire map.

③ Tap  to see information about wire map faults. If  shows, tap it to see a message about the results, such as **Bad patch cord at remote**.

④ The overall result for the Autotest. If the result shows an asterisk, See "PASS*/FAIL* Results" on page 101.

⑤ The result for the wire map test:

 The wire map does not agree with the outlet configuration selected for the test.

 The wire map agrees with the outlet configuration selected for the test.

⑥ When more than one button shows at the bottom of the screen, the tester highlights one in yellow to recommend which one to tap. See "Buttons to Do Tests and Save Results" on page 63.

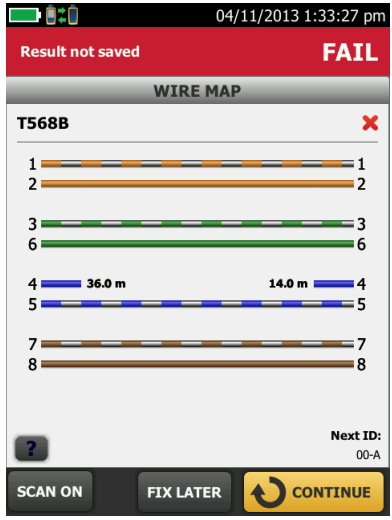

GPU60.PNG

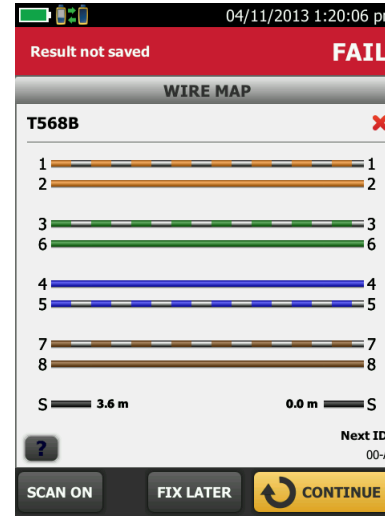

GPU61.PNG

Open	Open Shield
Wire 4 is open 36 m from the tester and 14 m from the remote.	The shield is open 3.6 m from the tester. The wire map always shows the shield if you select a shielded cable type (such as S/FTP) on the **TEST SETUP** screen and you turn on the **Shield Test**. If you select an unshielded cable type or turn off the **Shield Test**, the wire map shows the shield only if the shield has continuity.

Figure 39. Wire Map Examples: Open Wire and Open Shield

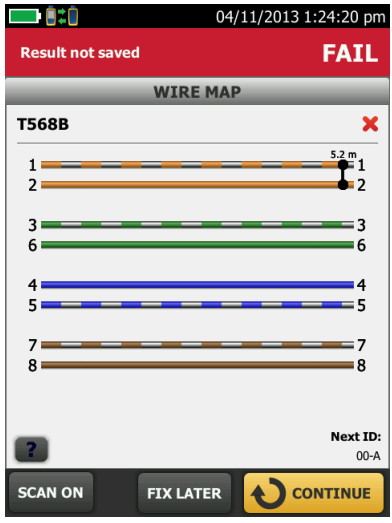

GPU62.PNG

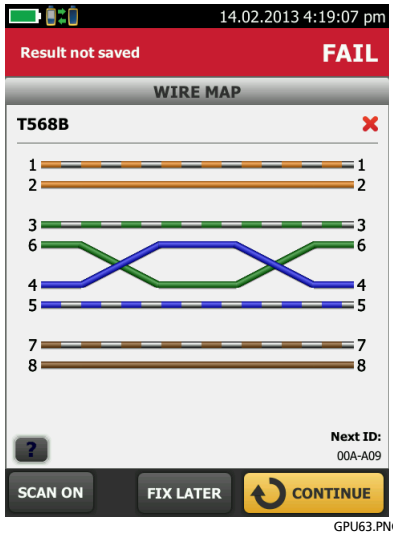

GPU63.PNG

Short	**Split pair**
Wires 1 and 2 are shorted 5.2 m from the remote. *Note* *Shorts not in a wire pair, for example between wires 2 and 3, always show at the near end (left side) of the wire map screen and do not show the length to the short.*	A wire in the 3,6 pair is crossed with a wire in the 4,5 pair. To see the location of the split pair, continue the test, then look at the HDTDX analyzer plot. The highest peak on the plot is typically where the split pair starts.

Figure 40. Wire Map Examples: Short and Split Pair

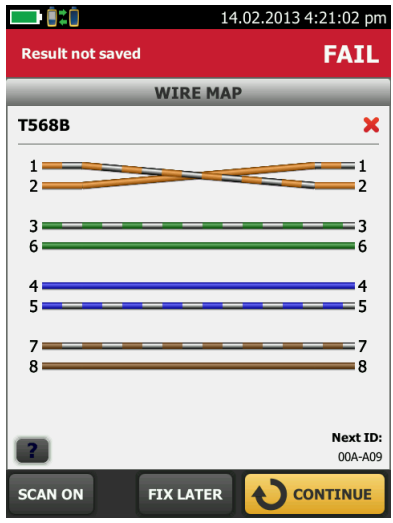

Reversed pair	**Crossed pairs**
Wires 1 and 2 are crossed.	Pairs 1,2 and 3,6 are crossed.

Figure 41. Wire Map Examples: Reversed Pair and Crossed Pairs

PERFORMANCE Tab

The **PERFORMANCE** tab (Figure 42) shows the overall result for each test that is required by the selected test limit.

① The test limit and cable type used for the test.

② To see detailed results for a test, tap the panel.

③ The overall result for the Autotest. If the result shows an asterisk, See “PASS*/FAIL* Results” on page 101.



Figure 42. PERFORMANCE Tab

④ The overall result for the test:

The results exceed the limit.

The results are within the limit.

The selected test limit does not have a limit for the test, or a dB rule applies. See “About dB Rules” on page 153.

The results are within the range of accuracy uncertainty for the tester. See “PASS*/FAIL* Results” on page 101.

The measurement shown for frequency-domain results is the worst margin. (The insertion loss plot is different. See "Insertion Loss" on page 120.)

⑤ When more than one button shows at the bottom of the screen, the tester highlights one in yellow to recommend which one to tap. See "Buttons to Do Tests and Save Results" on page 63.

Scalar Results

Scalar results are measurements that do not change with frequency. These are the **Length**, **Propagation Delay**, **Delay Skew** and **Resistance** results. These results do not have plot data.

Length, Propagation Delay, and Delay Skew

The length results show the length, propagation delay, and delay skew of each cable pair. See Figure 43.

The length shown on the **PERFORMANCE** screen is the length of the shortest pair. The tester uses the length of only the shortest pair to get a **PASS** or **FAIL** result for the length test.

Note

If the length of the shortest pair does not exceed the limit by 10 %, then the length test passes even if other pairs exceed the limit. This is the 10 % rule for length, as given in the ANSI/TIA-1152 standard. See the Fluke Networks Knowledge base for details.

A 2 % to 5 % difference in measured lengths of wire pairs in a cable is normal for these reasons:

- Signals travel at slightly different speeds in each wire pair, but the tester uses the same NVP to calculate the length of each pair.
- The twist rate varies slightly among wire pairs. If you untwist and straighten all the pairs, they will have slightly different lengths.

Differences between measured and actual lengths can be caused by variations in the cable's NVP value. NVP values can vary among cable types, lots, and manufacturers. In most cases, these differences are minor and may be ignored.

Propagation delay is the time taken for a test pulse to get to the end of a wire pair. The delay is measured in nanoseconds. One nanosecond is one-billionth of a second, or 0.000000001 second.

Propagation delays vary slightly among pairs because of small differences in electrical characteristics and length. The tester uses the propagation delay for each pair and the NVP for the cable type to calculate the length of each pair. The tester subtracts the propagation delays for the link interface adapters, so the length results do not include the length of the cables on the permanent link adapters.

Delay skews are the differences in propagation delays between the shortest delay and the delays of the other wire pairs. The shortest delay shows as "0" in the delay skew results.

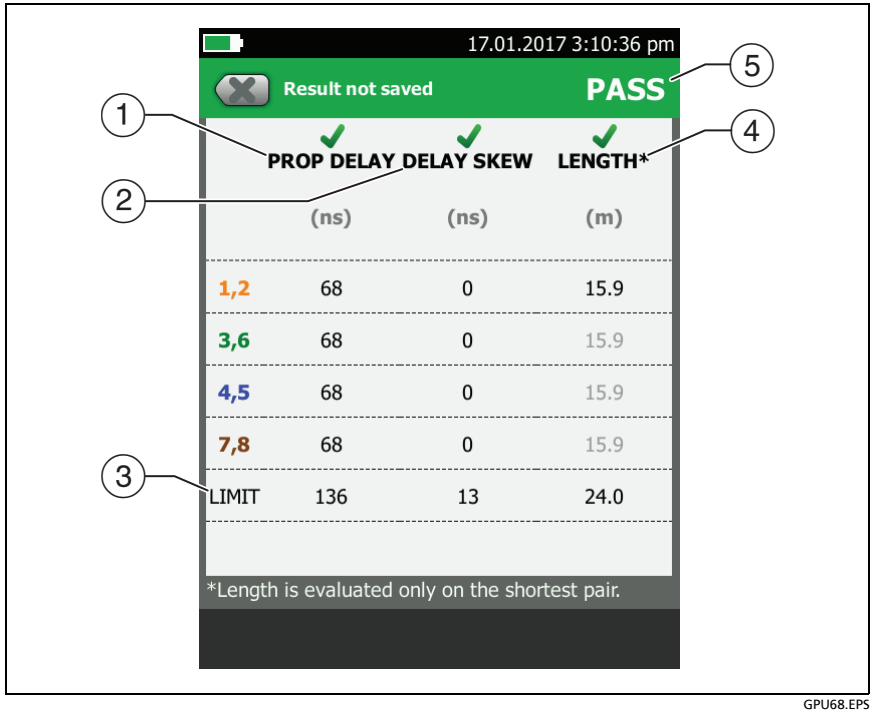

GPU68.EPS

Figure 43. Twisted Pair Length Results

Note

You can also measure length continuously. See "Continuous Tests" on page 114.

① **PROPAGATION DELAY**: The time taken for a test pulse to get to the end of a wire pair.

② **DELAY SKEW**: The differences in propagation delays between the shortest delay and the delays of the other wire pairs. The shortest delay shows as "0" in the delay skew results.

③ The tester shows a limit for propagation delay and delay skew if the measurements are required by the selected test limit. For measurements not required, the limit shows as **N/A**.

④ The tester uses the propagation delay for each pair and the NVP for the cable type to calculate the length of each pair.

The tester compares the length of the shortest pair to the limit, and gives the test a **PASS** result if the pair is not too long. The lengths of the other pairs are gray on the screen.

⑤ The tester gives a **PASS** result if the shortest length and the longest delay skew do not exceed their limits.

Loop Resistance

Loop Resistance results show the DC loop resistance for each wire pair. The remote puts a short at the end of each pair to make the loops. A pair's resistance depends on the quality of the contacts in the connector, the length of the pair, and its wire gauge. Figure 44 shows the loop resistance results screen.

Resistance problems always affect other tests. For example:

- A link that is too long has too much resistance and will fail the length test.
- High-resistance connections reflect signals, which causes the return loss test to fail. Use the tester's HDTDR analyzer to see the distance to the bad connection.
- A difference in the resistances of the wires in a pair causes the impedances of the wires to be unbalanced, which can cause TCL tests to fail.

Note

You can also measure resistance continuously. See "Continuous Tests" on page 114.

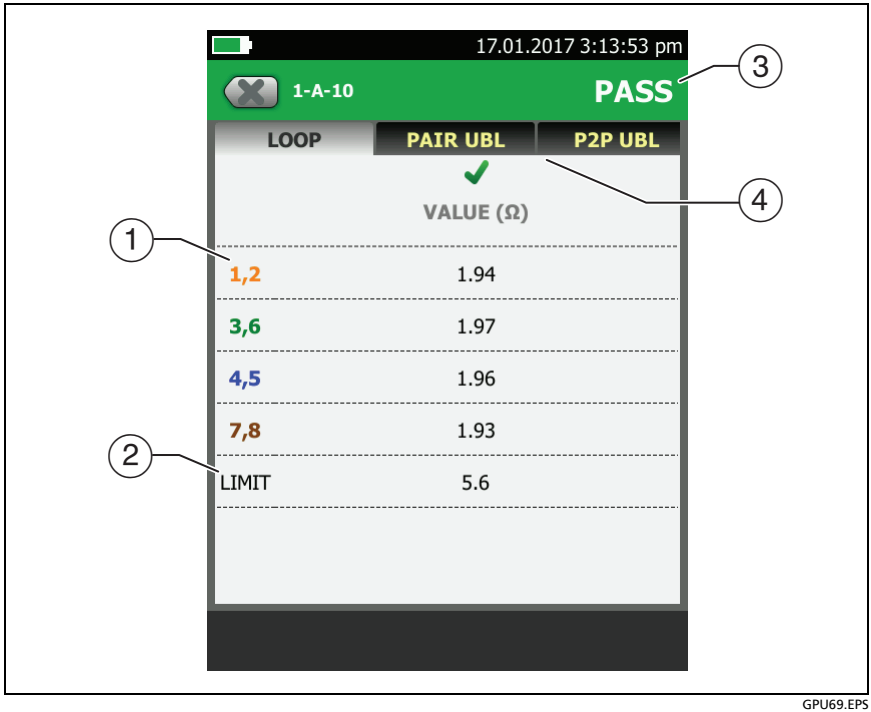

GPU69.EPS

Figure 44. Twisted Pair Resistance Results

① **VALUE** is the DC loop resistance for each pair.

② **LIMIT** shows only if the selected test limit includes a limit for the loop resistance test.

③ The overall result for the loop resistance test. Some test limits do not have a limit for loop resistance. The tester shows an ℹ when no limit is available.

④ **PAIR UBL** and **P2P UBL**: Resistance unbalance within pairs and resistance unbalance between pairs. The tabs show only if the resistance unbalance tests are required by the selected test limit. See “Resistance Unbalance” on page 140.

Continuous Tests

To do the wire map, length, or resistance test continuously, go to the home screen, tap **TOOLS** > **Single Tests**, then tap a test.

The wire map test compares the cable connections to the outlet configuration specified by the selected test limit and shows ✔ if the connections agree or ✖ if they do not.

The length and resistance tests do not compare the results to a test limit.

To save the result, tap **SCAN OFF** > **SAVE**. The saved test has an ℹ for the overall result.

Frequency-Domain Results

Frequency-domain results are the measurements that change with frequency, such as insertion loss and crosstalk. Figure 45 shows an example of results from a frequency-domain test.

How to Save Frequency-Domain Results as a Plot or a Table

If **Store Plot Data** is on when you do a test, the saved results show as plots. If **Store Plot Data** is **Off**, the tester does not save plot data for frequency-domain tests or for the HDTDR/HDTDX analyzers. You can see the plots before you save the test and exit the results screen. Figures 45 and 46 show examples of the two types of screens. Also see "Store Plot Data" on page 86.

Refer to Figure 45:

① The location of the measurements. To switch between results for the main and remote, tap **REMOTE** or **MAIN** (⑦).

② Measured values for the wire pairs.

③ The limit line (in red) for the measurement.

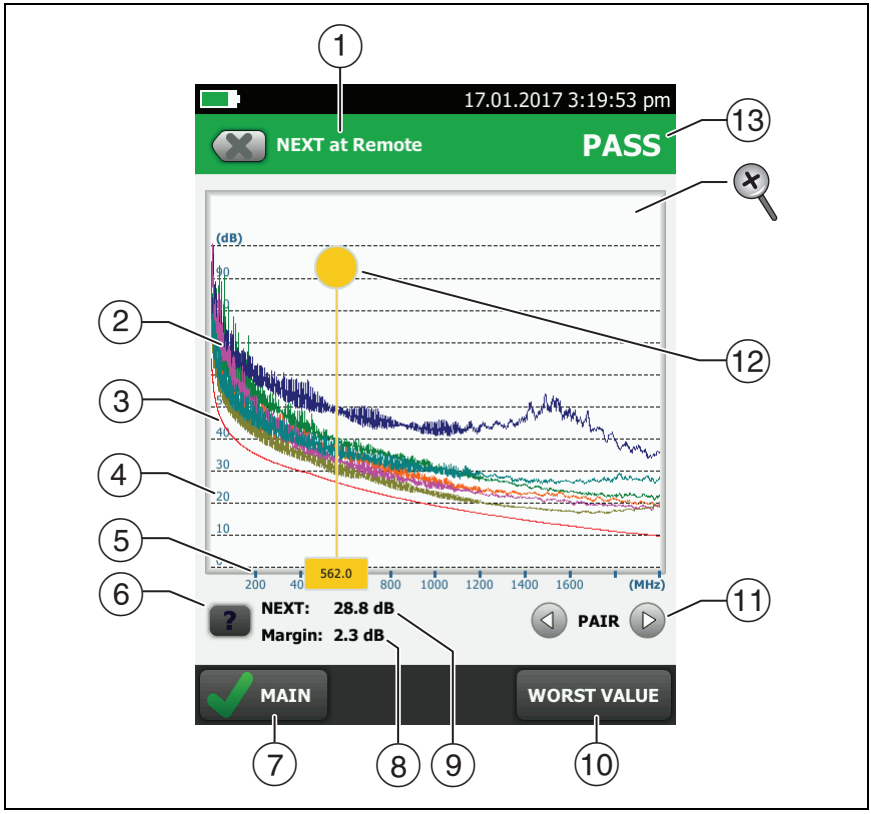

GPU71.EPS

Figure 45. Plot Screen for a Frequency-Domain Test

Notes

If the limit line is black, the tester does not evaluate the measurement at those frequencies because a dB rule applies. See "About dB Rules" on page 153.

The TIA C6A patch cord limit has a lower limit for the 3,6-4,5 pairs than for other pairs, so the screen shows two limit lines.

④ The vertical scale is the measured value in decibels.

⑤ The horizontal scale is the frequency range in megahertz.

⑥ To see help for the screen, tap .

⑦ To switch between results for the main unit and the remote, tap **REMOTE** or **MAIN**.

⑧ The margin at the cursor's location. The margin is the difference between the measured value and the limit. The margin is negative if the pair failed.

⑨ The measured value at the cursor's location.

⑩ When you first look at the plot, the cursor is at the frequency of the worst margin. To move the cursor to the worst value, tap **WORST VALUE**. (The insertion loss plot is different. See "Insertion Loss" on page 120.)

⑪ To see the plots for pairs, tap  or . To select pairs to show on the plot, touch  or  for one second to see the **SELECT PAIRS** window. Select the pairs you want to see, then tap **OK**.

⑫ When you first look at the plot, the cursor is at the frequency of the worst margin. To move the cursor to the worst value, tap **WORST VALUE** (⑩). The box at the bottom of the cursor shows the frequency at the cursor's position.

To move the cursor to other points, touch and drag the yellow circle at the top of the cursor

To move the cursor in small increments, tap the yellow circle, then tap the arrow buttons that show on the plot ( or ).

⑬ The overall result for the test. If you look at pairs, the result is for those pairs. If the result shows an asterisk, see "PASS*/ FAIL* Results" on page 101.

To zoom in and out, use the pinch, reverse-pinch, and double-tap gestures on the touchscreen. You can also use the zoom controls to change the magnification on the frequency and decibels scales independently. See Figure 5 on page 25.

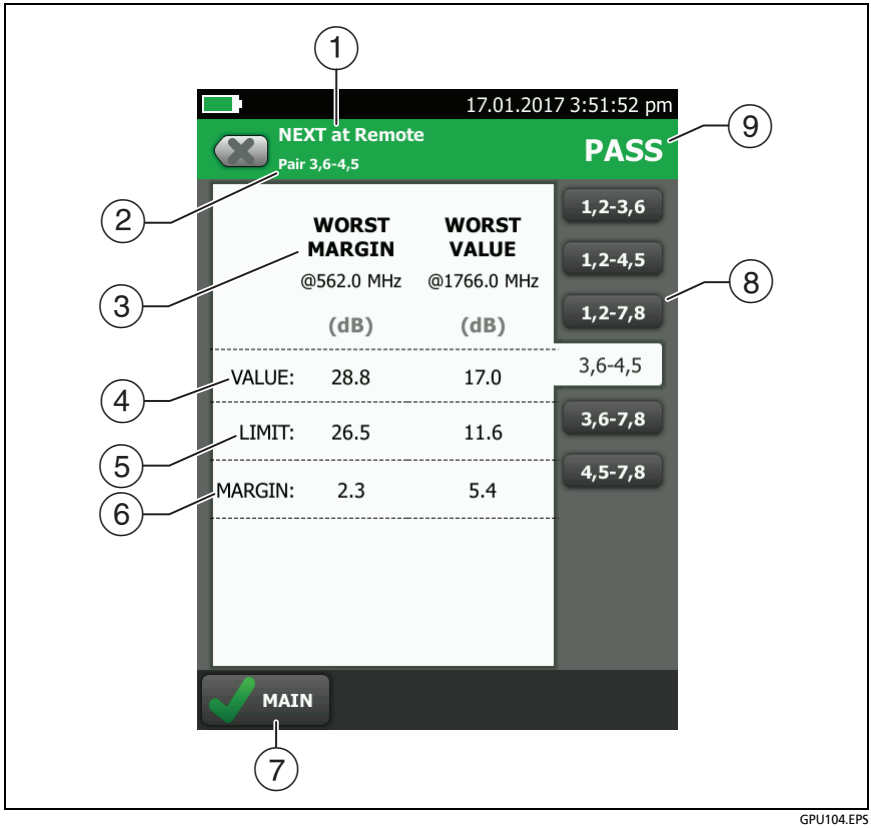

GPU104.EPS

Figure 46. Tabular Results Screen for a Frequency-Domain Test

① The location where the tester made the measurements. To switch between results for the main and remote, tap **REMOTE** or **MAIN** (⑦).

② The results are for the wire pair or pairs shown. To see the results for a different pair or pairs, tap a tab on the right side of the screen (⑧).

③ **WORST MARGIN** is the measurement that is nearest to the limit line or exceeds the limit by the largest amount. **WORST VALUE** is the worst measurement.

④ The measured value.

⑤ The limit specified by the selected test limit.

⑥ **MARGIN** is the difference between the measured value and the limit. The value is negative and is in a red box if the measurement exceeds the limit.

⑦ To switch between results for the main unit and the remote, tap **REMOTE** or **MAIN**.

⑧ To see the results for a different pair or pairs, tap a tab.

⑨ The result for the pair. If the result shows an asterisk, see "PASS*/FAIL* Results" on page 101.

Insertion Loss

Insertion loss is the loss of signal strength over the cabling, as shown in Figure 47. Insertion loss is caused by the DC resistance of the copper wire and connecting hardware, the impedance of the twisted pairs, and by leakage of electrical energy through the cable's insulation. Lower values of insertion loss mean better cabling performance.

At higher frequencies, signals tend to travel only near the surface of a conductor. This "skin effect", along with the cabling's inductance and capacitance, cause insertion loss to increase with frequency.

Figure 48 shows the insertion loss plot. If the insertion loss test passed, the tester puts the cursor at the worst value. If the test failed, the cursor is at the worst margin.

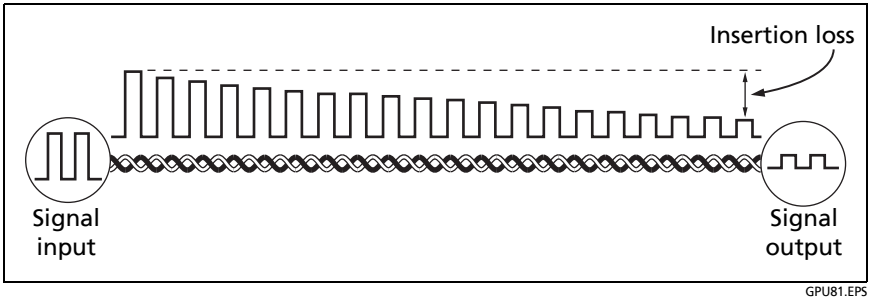

Figure 47. Insertion Loss is a Decrease in Signal Strength



GPU70.PNG

Figure 48. Twisted Pair Insertion Loss Plot

Return Loss

Return loss is the difference (in dB) between the power of a transmitted signal and the power of the signals reflected back. The signal reflections are caused by variations in the cable's impedance. Figure 49 shows some common sources of reflections that create return loss.

High return loss means the cabling reflects very little of the transmitted signal back to the source. High return loss is especially important for high-speed systems, such as Gigabit Ethernet. The bi-directional (full-duplex) transceivers used in these systems use directional couplers to distinguish between incoming and outgoing signals. The couplers may interpret strong reflected signals as incoming data, resulting in data errors.

A return loss plot indicates how well a cable's impedance matches its rated impedance over a range of frequencies. Figure 50 shows the return loss plot. The tester puts the cursor at the worst margin.

For return loss failures, you can use the HDTDR analyzer plot to locate the cause of the failure. See "The HDTDR Analyzer" on page 198.

Note

Because the 3 dB rule applies to return loss results, the result is usually an ℹ*. See "About dB Rules" on page 153.*

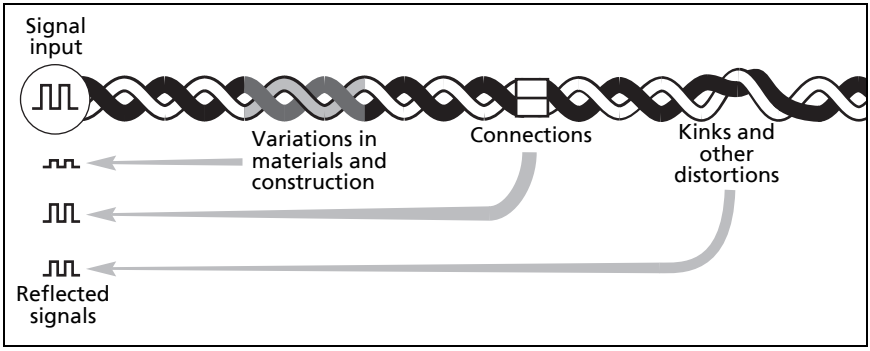

Figure 49. Sources of Return Loss

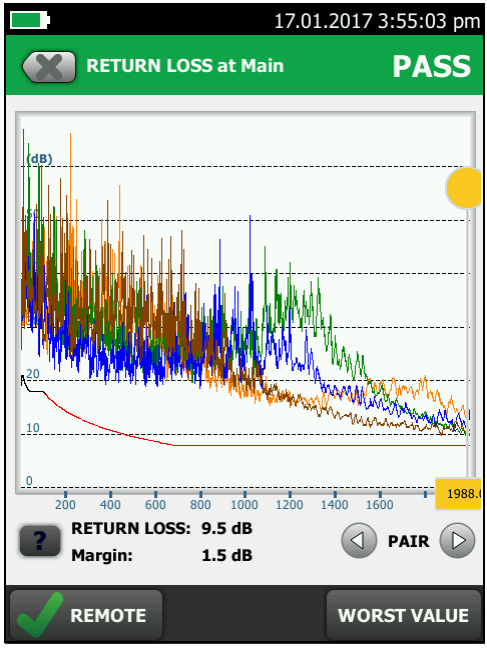

GPU77.PNG

Figure 50. Return Loss Plot

Impedance

Notes

Most test limits do not require the impedance measurement. For these limits, the tester does not make the measurement or it shows an ℹ *for the result*

For cables shorter than approximately 13 ft (4 m), the tester shows ***Cable too short*** *for the impedance measurement.*

Impedance results show the approximate characteristic impedance of each wire pair. Figure 51 shows the impedance results.

Characteristic impedance is the impedance a cable would have if the cable were infinitely long. Correct operation of the network depends on constant characteristic impedance throughout the system's cables and connectors. Sudden changes in characteristic impedance, called anomalies, cause signal reflections that can cause network faults.

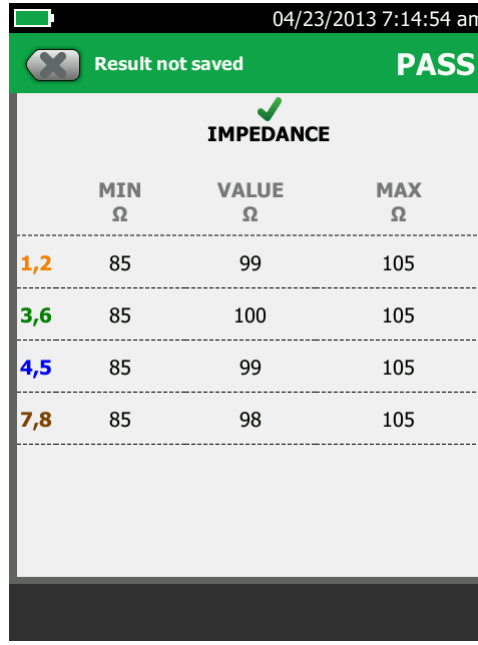

GPU158.PNG

Figure 51. Twisted Pair Impedance Results

NEXT (Near-End Crosstalk)

NEXT results show the crosstalk attenuation between wire pairs. NEXT is the difference in amplitude (in dB) between a transmitted signal and the crosstalk received on other wire pairs at the same end of the cabling. Higher NEXT values correspond to larger differences between the amplitudes of the transmitted signals and the crosstalk, which corresponds to better cabling performance. Figure 52 shows the NEXT plot. The tester puts the cursor at the worst margin.

Note

If the NEXT result is an an **i**, *the 4 dB rule applies.*
See "About dB Rules" on page 153.

Because of insertion loss, crosstalk signals occurring farther from the signal source are weaker and cause less trouble than crosstalk nearer the source (Figure 52). For this reason, the tester measures NEXT from both ends of the cabling.

For NEXT failures, you can use the HDTDX analyzer plot to locate cause of the failure. See "The HDTDR Analyzer" on page 198.

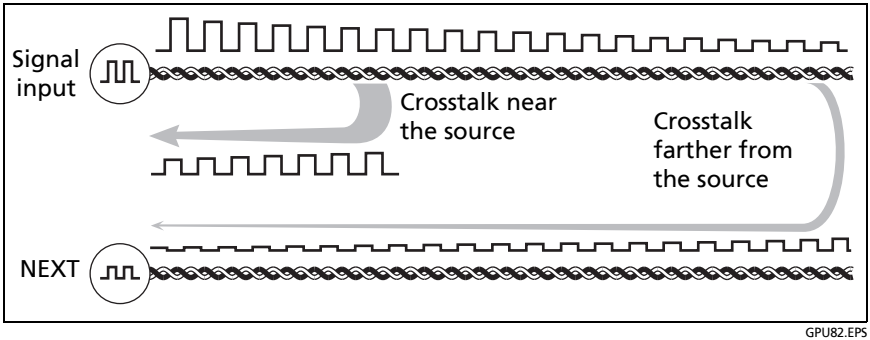

Figure 52. Near-End Crosstalk (NEXT)

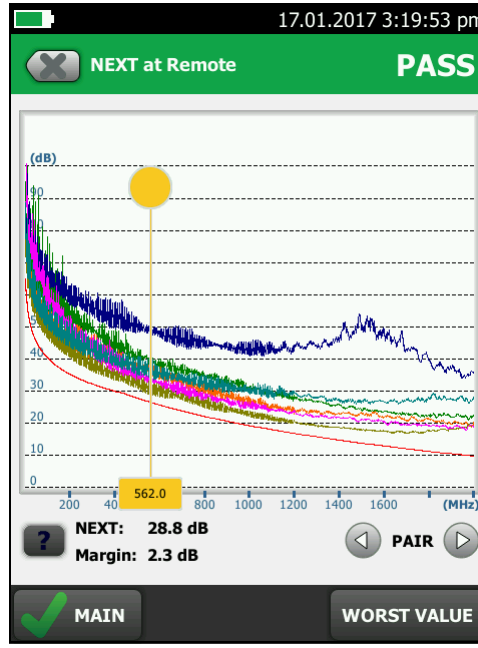

GPU71.PNG

Figure 53. NEXT Plot

PS NEXT (Power Sum Near End Crosstalk)

PS NEXT results show how much each wire pair is affected by the combined crosstalk from the other pairs. PS NEXT is the difference (in dB) between the test signal and the crosstalk from the other pairs received at the same end of the cabling. The tester uses the NEXT values to calculate PS NEXT. Higher PS NEXT values correspond to better cabling performance.

PS NEXT results are typically a few dB lower (worse) than worst-case NEXT results. Figure 54 shows the PS NEXT plot. The tester puts the cursor at the worst margin.

Note

If the PS NEXT result is an an , *the 4 dB rule applies. See "About dB Rules" on page 153.*

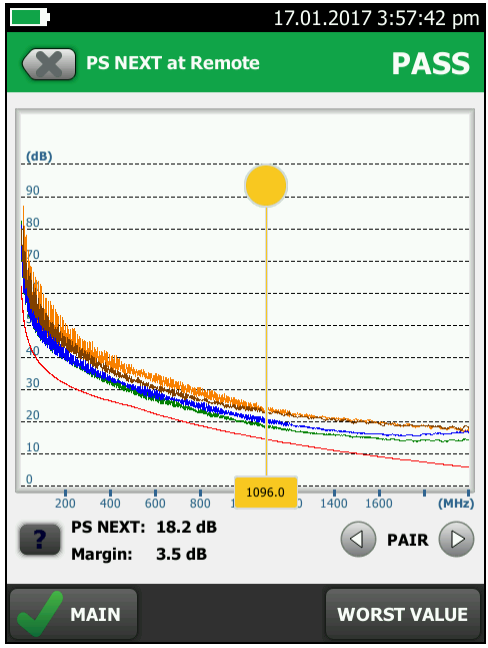

GPU105.PNG

Figure 54. PS NEXT Plot

ACR-N (Attenuation to Crosstalk Ratio at the Near End)

ACR-N is like a signal-to-noise ratio. ACR-N values indicate how the amplitude of signals received from a far-end transmitter compares to the amplitude of crosstalk produced by near-end transmissions, as shown in Figure 55. The tester calculates ACR-N as the difference (in dB) between NEXT and insertion loss. Higher ACR-N values mean that received signals are much larger than crosstalk signals. Higher ACR-N values correspond to better cabling performance.

Figure 56 shows the ACR-N plot. The tester puts the cursor at the worst margin.

Note

If the ACR-N result is an **i**, *the 4 dB rule applies.*
See "About dB Rules" on page 153.

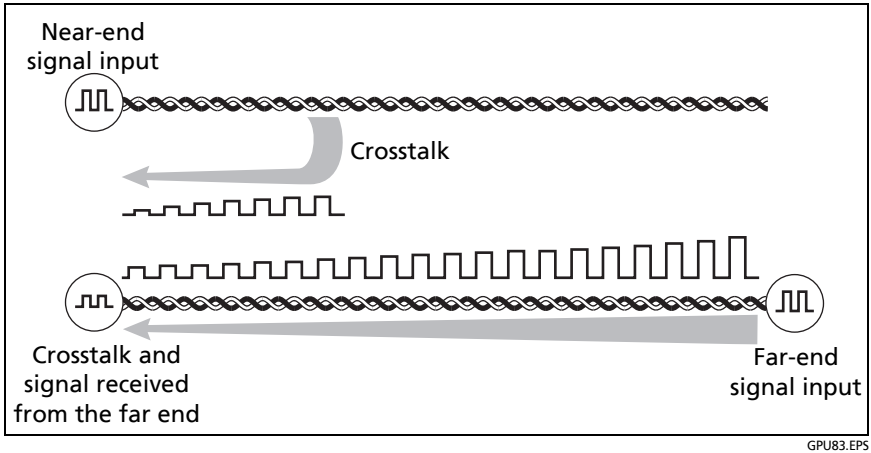

Figure 55. Attenuation to Crosstalk Ratio, Near End (ACR-N)

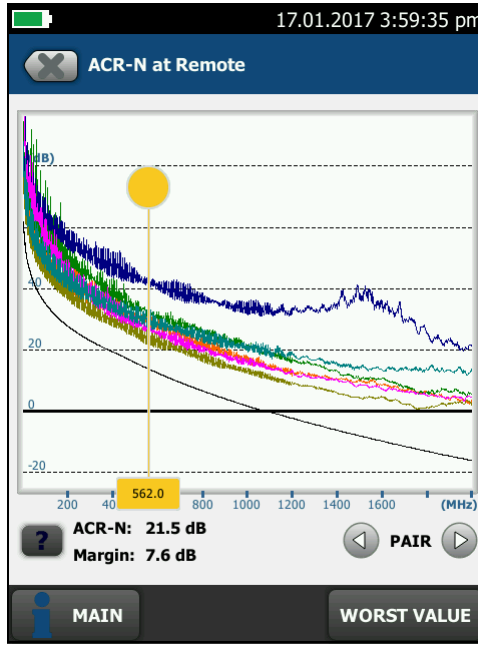

GPU73.PNG

Figure 56. ACR-N Plot

PS ACR-N (Power Sum Attenuation to Crosstalk Ratio, Near End)

PS ACR-N values show how the amplitude of signals received from a far-end transmitter compares to the combined amplitudes of crosstalk produced by near-end transmissions on the other wire pairs. PS ACR-N is the difference (in dB) between PS NEXT and attenuation (insertion loss). The tester uses the PS NEXT and attenuation results to calculate PS ACR-N values. Higher PS ACR-N values mean received signals are much larger than the crosstalk from all the other wire pairs. Higher PS ACR-N values correspond to better cabling performance.

PS ACR-N is the difference (in dB) between each wire pair's attenuation (insertion loss) and the combined crosstalk received from the other pairs. The tester uses the PS NEXT and attenuation values to calculate PS ACR-N values.

PS ACR-N results are typically a few dB lower (worse) than worst-case ACR-N results. Figure 57 shows the PS ACR-N plot. The tester puts the cursor at the worst margin.

Note

If the PS ACR-N result is an an **i**, *the 4 dB rule applies. See "About dB Rules" on page 153.*

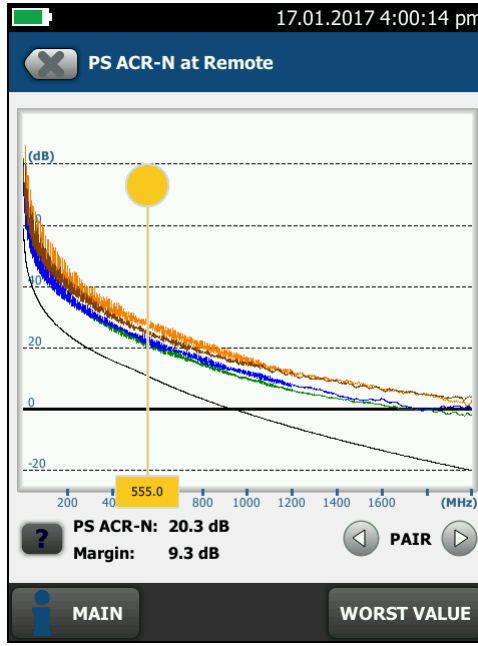

GPU106.PNG

Figure 57. PS ACR-N Plot

ACR-F (Attenuation to Crosstalk Ratio, Far End)

While NEXT is measured at the same end as the signal source, FEXT (far-end crosstalk) is measured at the far end. Because all far-end crosstalk signals travel the same distance, they experience the same amount of attenuation, as shown in Figure 58. This means that all crosstalk signals contribute equally to noise at the far end. This is different from near-end crosstalk. At the near end, crosstalk occurring closer to the source contributes more to noise than crosstalk occurring farther from the source.

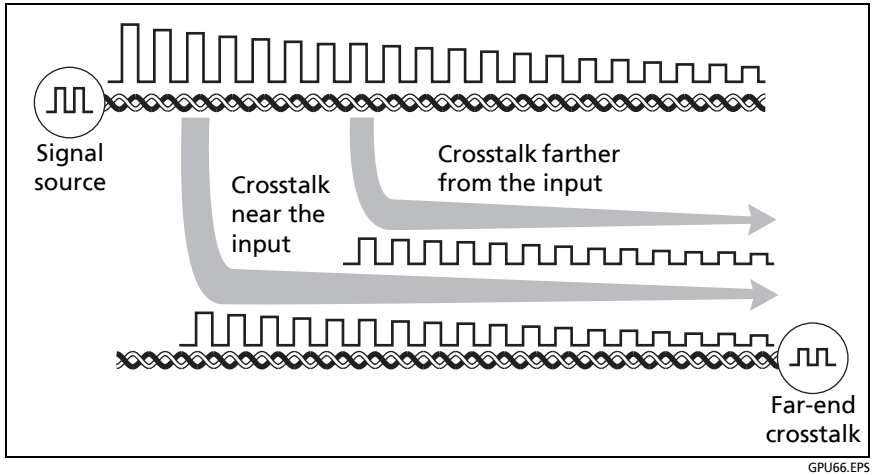

Figure 58. Far-End Crosstalk (FEXT)

Because of attenuation, FEXT on longer cables is less than FEXT on shorter cables of the same type. Subtracting the effects of attenuation normalizes the results for length and produces ACR-F (attenuation to crosstalk ratio, far end) values. Because ACR-F does not depend on length, it is used instead of FEXT to evaluate cable performance.

Because all far-end crosstalk signals travel the same distance, they tend to add up in phase. Therefore, high ACR-F is critical when two or more wire-pairs carry signals in the same direction. 1000BASE-T carries bi-directional signals on all four wire pairs, so ACR-F is a critical parameter for 1000BASE-T certification.

Like ACR-N, ACR-F represents a signal-to-noise ratio for the cabling. Higher ACR-F values mean that data signals received at the far end of the cabling are much larger than crosstalk signals received at the far end. Higher ACR-F values correspond to better cabling performance. Figure 59 shows the ACR-F plot. The tester puts the cursor at the worst margin.

Note

If the ACR-F result is an **i**, *the 67 dB rule applies.*
See "About dB Rules" on page 153.

NEXT and ACR-F performance tends to be similar in cable, but may differ greatly in connecting hardware. Some connectors achieve good NEXT performance by balancing the inductive and capacitive currents that cause crosstalk. Because these currents are 180° out of phase at the near-end of the cabling, they cancel out, which eliminates crosstalk at the near end. However, currents that cancel at the near end add up at the far end, causing far-end crosstalk and poor ACR-F performance.

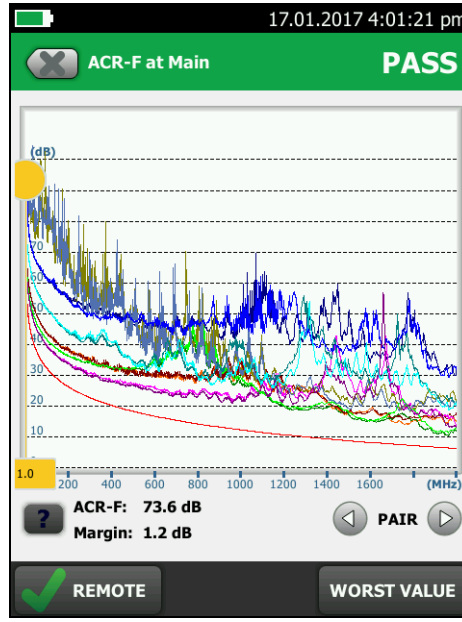

GPU75.PNG

Figure 59. ACR-F Plot

PS ACR-F

PS ACR-F results show how much the far end of each wire pair is affected by the combined far-end crosstalk from the other pairs. PS ACR-F is the difference (in dB) between the test signal and the crosstalk from the other pairs received at the far end of the cabling. The tester uses the ACR-F values to calculate PS ACR-F. PS ACR-F results are typically a few dB lower than worst-case ACR-F results. Higher PS ACR-F values correspond to better cabling performance. Figure 60 shows the PS ACR-F plot. The tester puts the cursor at the worst margin.

Note

If the PS ACR-F result is an , the 67 dB rule applies. See "About dB Rules" on page 153.

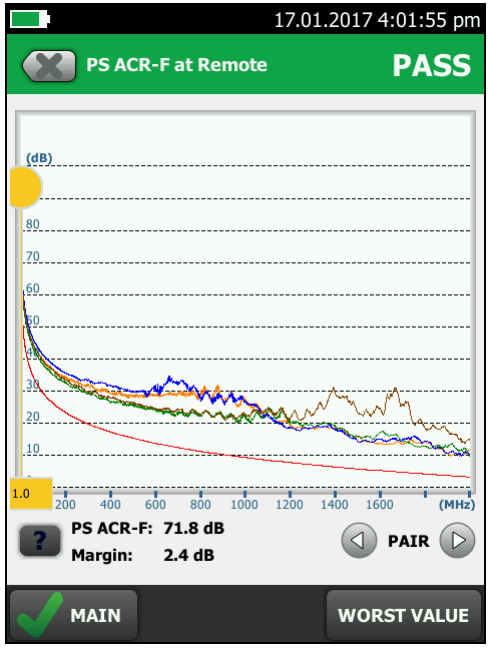

GPU107.PNG

Figure 60. PS ACR-F Plot

Balance Measurements

Balance measurements show you how well the impedance and resistance of the wires in a pair match each other. Balanced wire pairs are used with differential mode signaling to make a transmission system that is less susceptible to electrical noise and emits less noise itself.

Differential and Common-Mode Signals

To increase noise immunity and decrease the emissions of twisted pair cabling, network equipment transmits and receives signals in differential mode. Differential-mode uses two signals that have equal amplitudes and opposite polarities. The transmitter applies one signal to each wire in a pair, and the receiver measures the voltage between the wires. Because the voltages on the two wires have equal amplitudes and opposite polarities, the electromagnetic fields around the wires cancel each other out. The twisting of the pairs improves the cancellation. Because the pair emits almost no electromagnetic radiation, it causes almost no noise in other wire pairs.

Differential-mode signaling also reduces electrical noise on the pair from outside sources such as electric motors and nearby pairs. Electromagnetic fields from outside sources cause voltages that have the same amplitudes and polarities on each wire in the pair. These are common-mode voltages. Because the difference in the noise voltage between the wires is zero, the receiver rejects common-mode signals, and the noise does not show in the network signals on the pair (Figure 61, top).

Effects of Unbalanced Impedance in a Wire Pair

If the wires in a pair have unequal impedances to ground, the common-mode voltages induced on the pair by nearby electromagnetic fields converts to differential-mode noise that interferes with the data signal. (Figure 61, bottom).

Conversely, an unbalanced pair radiates unwanted electromagnetic radiation. This occurs because the opposing, differential signals are not equal, so the they are partially converted to common mode. Common-mode power on a wire pair produces more radiation than the same amount of power in differential mode because the common-mode radiation from the wires does not cancel when the wires are close together.

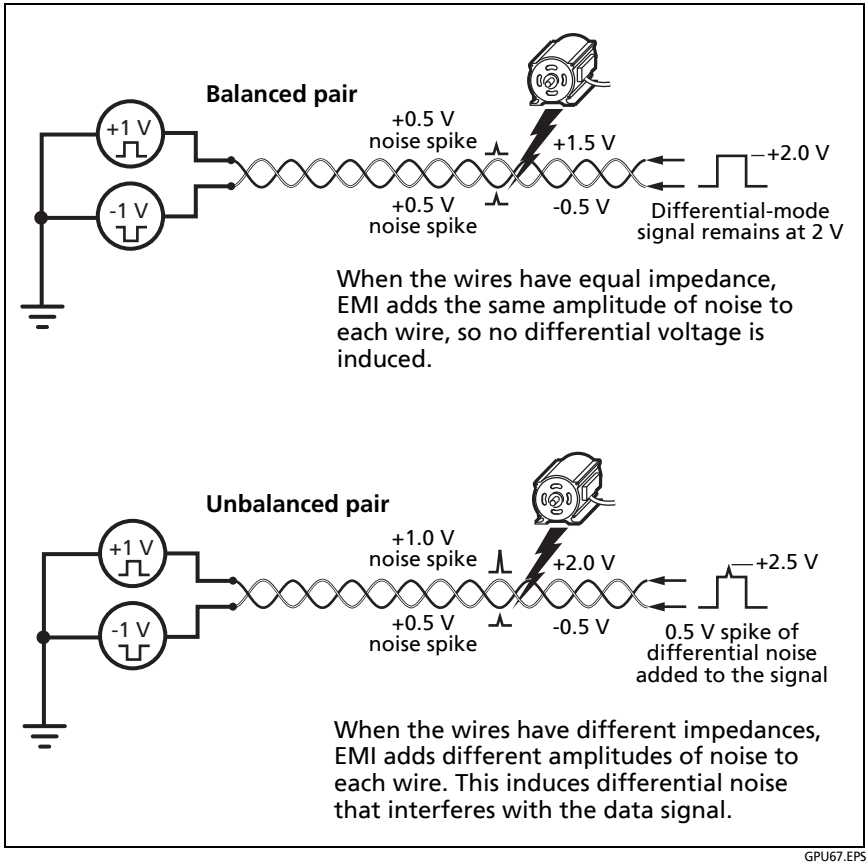

Figure 61. The Effects of EMI on Balanced and Unbalanced Twisted Pairs

Balance Measurements Available

The tester has test limits with these balance measurements:

- In limits with **(+PoE)** and others: Resistance unbalance
- In limits with **(+All)**:
  - Resistance unbalance
  - CMRL (Common-Mode Return Loss)
  - CDNEXT (Common-Mode to Differential-Mode Near-End Crosstalk)
  - TCL (Transverse Conversion Loss)
  - ELTCL (Equal-Level Transverse Conversion Loss)

To include balance measurements in an Autotest

1 On the home screen, tap the test setup panel.

2 On the **CHANGE TEST** screen, select a twisted pair test to change, then tap **EDIT**.

Or to set up a new twisted pair test, tap **NEW TEST**. If no module is installed, the **MODULE** screen shows. Tap **DSX-5000 CableAnalyzer** or **DSX-8000 CableAnalyzer**.

3 On the **TEST SETUP** screen, tap **Test Limit**.

4 On the **TEST LIMIT** screen, tap **MORE**, then tap a **Limit Group**. For some limit groups, such as **TIA** and **ISO**, tap a sub-group to see the test limits.

Limits with balance measurements added to them show when you select the **+PoE** or **+All** checkbox at the bottom of the screen. Balance measurements are standard in some limits. These limits do not have "**(+PoE)**" or "**(+All)**" after their name.

5 Tap a test limit that has "**(+PoE)**" or "**(+All)**" after its name, or one that you know includes the balance measurements you need, then tap **SAVE**.

Note

*All balance measurements together **(+All)** add ~7.6 seconds to the Autotest time.*

Resistance Unbalance

Resistance unbalance is important in PoE (power over Ethernet) systems, which supply DC power over twisted pair cabling.

When required by the selected test limit, the tester shows two types of resistance unbalance: resistance unbalance within pairs (**PAIR UBL** in the results) and resistance unbalance between pairs (**P2P UBL** in the results). The tester uses the resistance of the individual wires in the pairs to calculate these values.

Resistance Unbalance within Pairs (PAIR UBL)

Resistance unbalance within a pair is the difference in DC resistance between the wires in a wire pair. This is different from the DC loop resistance measurement, which is the total resistance of the two wires.

Resistance unbalance in pairs is important in PoE systems where DC power is carried over the same wire pairs as data. In these systems, the PoE power source applies a DC current to the center taps of the isolation transformers for two pairs. This causes DC current through the pairs, which provides DC power across the center taps of the transformers at the far end. The currents in the two wires of each pair is common-mode: the flow in the same direction. So, when the resistance of each wire in the pair is equal, the DC voltage on each wire is equal and the voltage across the wires is 0 V, as shown at the top of Figure 62.

At the center tap of the transformer for the pair, the net DC current from the pair is zero, so the transformer operates at the mid-point relative to the maximum flux density of its core.

If the DC resistance of the wires is not the same, the DC voltage on each wire is not the same. This causes a voltage across the wires, which causes an offset, or bias, current in the transformer at the far end. The offset raises or lowers the mid-point of the transformer's operation. If the offset is large enough, the flux level in the transformer's core saturates during the peaks of the data signals. During saturation, the flux level in the core cannot increase further in response to the change in current caused by the data signal. Since voltage on a transformer's output is present only when the flux field is changing, the output voltage droops. This causes distortion of the data signal, as shown at the bottom of Figure 62.

Resistance unbalance within pairs can be caused by poor-quality terminations, damaged connectors, corroded contacts, and damaged or poorly-designed cable.

Figure 63 shows test results for resistance unbalance within pairs.

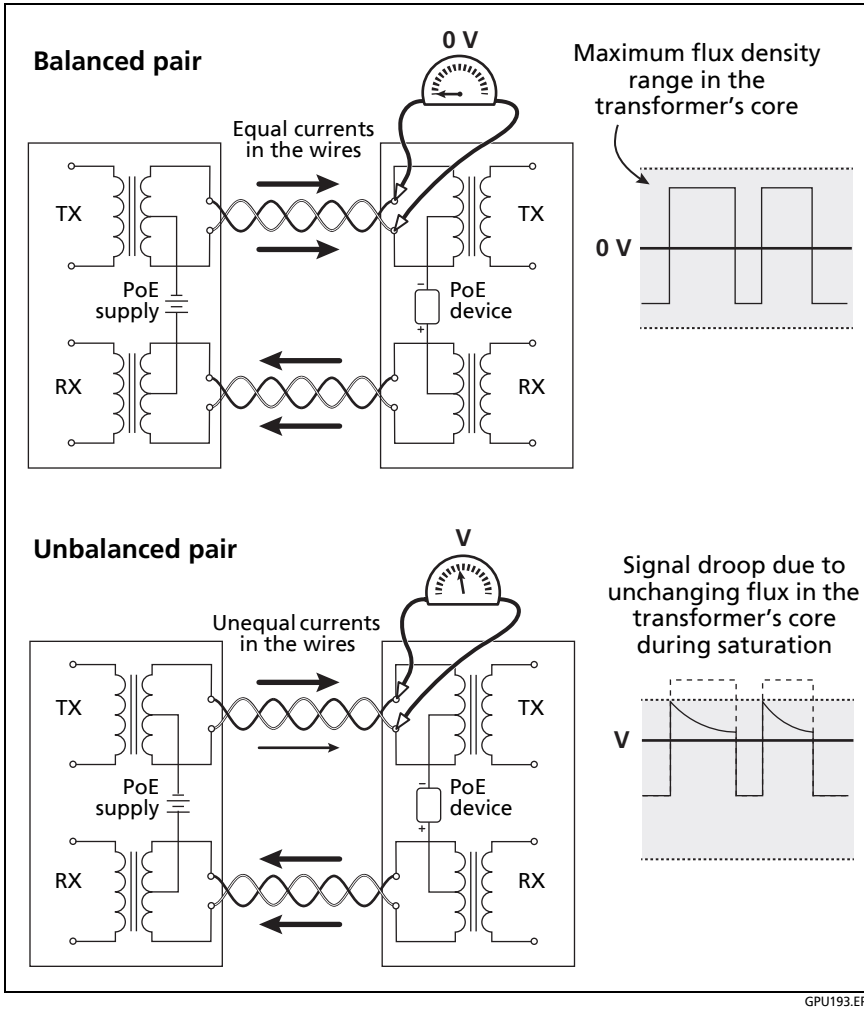

Figure 62. Resistance Unbalance in a Pair Causes Distortion of the Data Signal in a PoE System

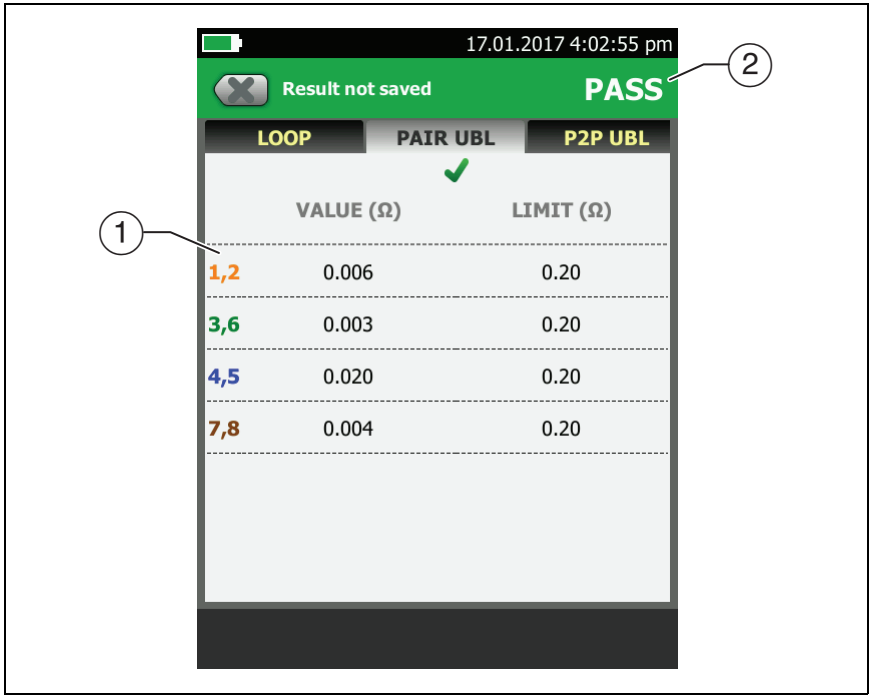

GPU195.EPS

Figure 63. Resistance Unbalance within Pairs

① The **VALUE** is the difference in the resistances of the two wires in the pair.

The tester uses the measured resistances of the two wires and the maximum unbalanced percentage specified by the selected test limit to calculate the **LIMIT** for each pair. The **VALUE** is in a red box if it exceeds the **LIMIT**.

② The overall result for the resistance unbalance test.

Resistance Unbalance Between Pairs (P2P UBL)

The IEEE 802.3bt standard gives limits for resistance unbalance between pairs. These limits are used for Type 3 and 4 PoE systems, which deliver power over 4 wire pairs.

In 4-pair systems, resistance unbalance between pairs reduces the current in one pair, and increases the current in another. The increased current can cause the power source to limit the current on the pair, which can cause a powered device to operate incorrectly.

Resistance unbalance between pairs is affected mainly by cable design. For example, for adequate NEXT performance in Cat 6A cable, it is necessary to use different twist rates among the pairs. This causes the pairs to be different lengths, which causes a difference in the resistance of the pairs.

Figure 64 shows test results for resistance unbalance between pairs.

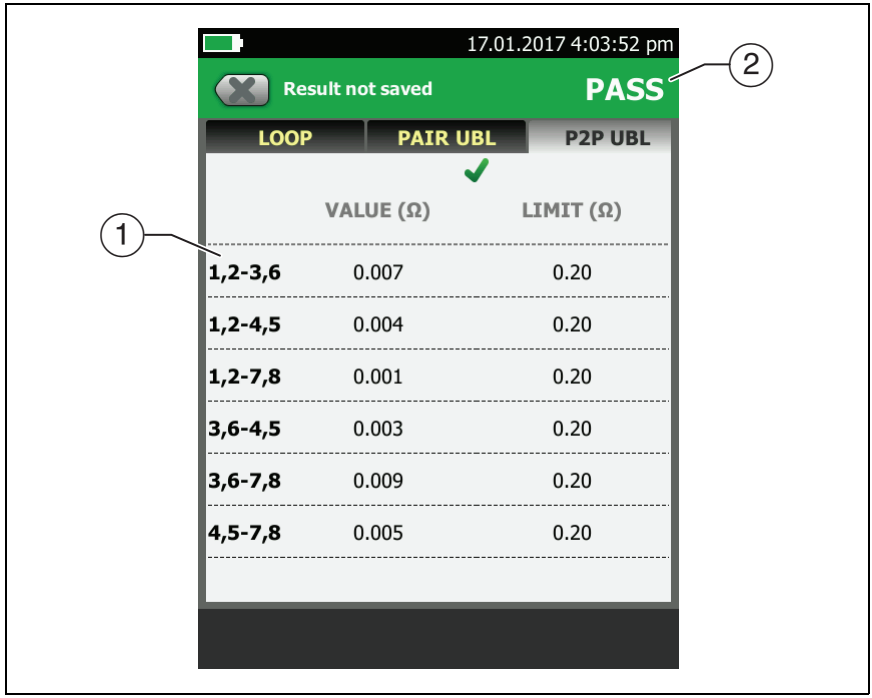

Figure 64. Resistance Unbalance Between Pairs

① The **VALUE** is the difference in the resistances of the pairs. The resistance of each pair is the parallel resistance of the wires in the pair. The tester uses the measured resistance of the wires to calculate the parallel resistance of the pair. Then, the tester uses the resistance of each pair and the maximum unbalanced percentage specified by the selected test limit to calculate the **LIMIT** for each pair. The **VALUE** is in a red box if it exceeds the **LIMIT**.

② The overall result for the pair-to-pair resistance unbalance test.

CMRL (Common-Mode Return Loss)

Common-mode return loss is the difference (in dB) between the power of a common-mode signal applied to a wire pair and the power of the common-mode signal reflected back on the same pair. The reflections are caused by variations in the cable's impedance. Smaller reflected signals correspond to better CMRL.

CMRL is similar to return loss, except that return loss is measured by applying a differential-mode signal to one pair and measuring the differential-mode signal reflected back on the same pair.

At the time this manual was released, no test standards required CMRL measurements. The CMRL test is available for troubleshooting purposes, and is useful when developing systems above 10GBASE-T.

Figure 65 shows the CMRL plot.

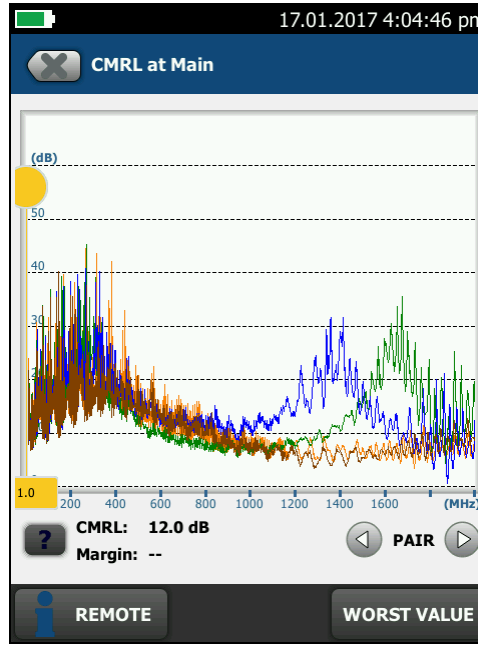

GPU92.PNG

Figure 65. CMRL Plot

CDNEXT (Common-Mode to Differential-Mode Near-End Crosstalk)

CDNEXT is the difference in amplitude (in dB) between a common-mode voltage applied to a pair and the differential-mode voltage measured on other pairs at the same end of the cabling. Higher CDNEXT values correspond to larger differences between the amplitudes of the common-mode and differential-mode voltages, which means better cabling performance. Since CDNEXT occurs mostly in the connecting hardware, the measurement indicates the quality of the design and workmanship of the jacks and connectors in the installation.

At the time this manual was released, no test standards required CDNEXT measurements.

Figure 67 on page 150 shows the CDNEXT plot.

CM to DM Conversion in Cables and Connectors

Twisted pair cabling readily picks up common-mode noise from external sources such as motors and fluorescent lights. But not much of this common-mode noise converts to differential mode in the cabling because of the construction of the pairs. The wires are very close together, and the twisting equalizes the noise signal picked up on each wire, so that very little differential voltage is generated.

But conversion to differential mode readily occurs in RJ45 connectors. Typically, the wires are untwisted in the plugs. Some wires can be close to individual wires in other pairs for a significant distance, as shown in Figure 66. This spacing causes common-mode voltage on some pairs to be converted to differential-mode voltage on other pairs. The problem is most severe between pairs 4 and 3 and pairs 2 and 3.

Newer Connectors Reduce Mode Conversion

Newer Cat 6A connector designs compensate for the inherent unbalance of RJ45 connectors, and have much lower mode conversion than older designs. Links constructed with these connectors have better EMI rejection and also tend to have better alien crosstalk performance.

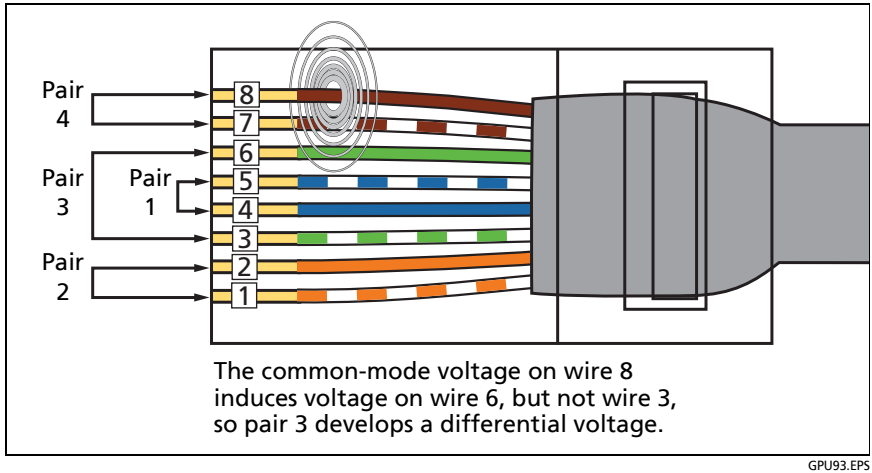

Figure 66. Common-Mode Voltage Converts to Differential-Mode Voltage in an RJ45 Connector

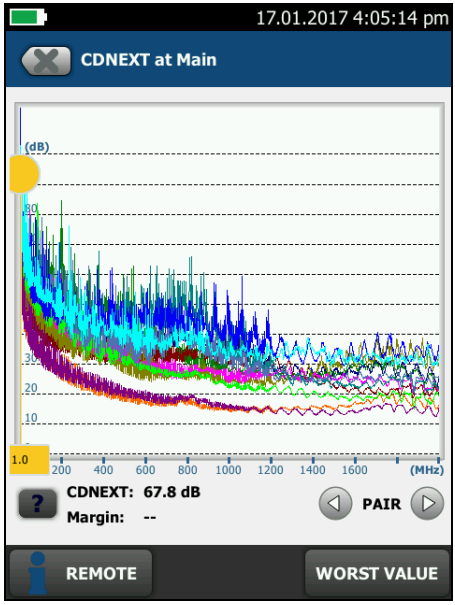

GPU91.PNG

Figure 67. CDNEXT Plot

TCL (Transverse Conversion Loss)

Transverse conversion loss is the ratio (in dB) of a common-mode voltage measured on a wire pair relative to a differential-mode voltage applied to the same end of the pair. The TCL value shows you how well the impedances of the pair's conductors are balanced. A high TCL value means that the impedances of the conductors relative to ground are almost equal. High TCL values correspond to better noise immunity and lower emissions.

TCL is similar to return loss, except that return loss is measured by applying a differential-mode signal to one pair and measuring the differential-mode signal reflected back on the same pair.

TCL and the related measurement of ELTCTL are important for evaluating the performance of links installed in industrial premises because of the high level of EMI caused by industrial equipment, and the problems that EMI causes in networking equipment. Figure 68 shows the TCL plot.

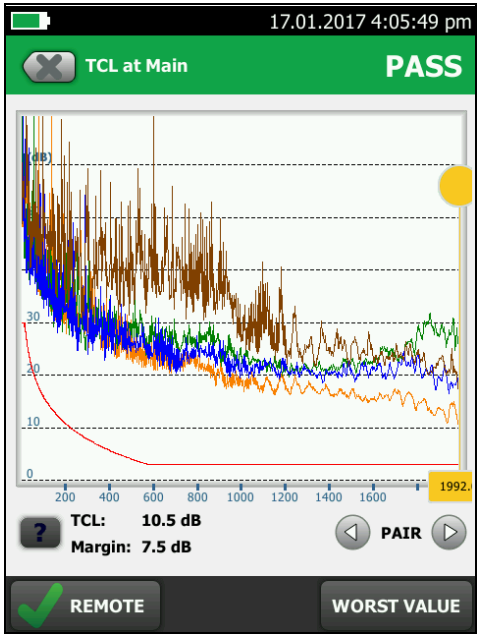

GPU78.PNG

Figure 68. TCL Plot

ELTCTL (Equal Level Transverse Conversion Transfer Loss)

Because of insertion loss, end-to-end mode conversion is less on longer cables than on shorter cables of the same type. Subtracting the effects of insertion loss normalizes the results for length and produces ELTCTL values, which are not dependent on length. Because ELTCTL does not depend on length, it is used instead of TCTL to evaluate cable performance. Figure 69 shows the ELTCTL plot. The tester puts the cursor at the worst margin.

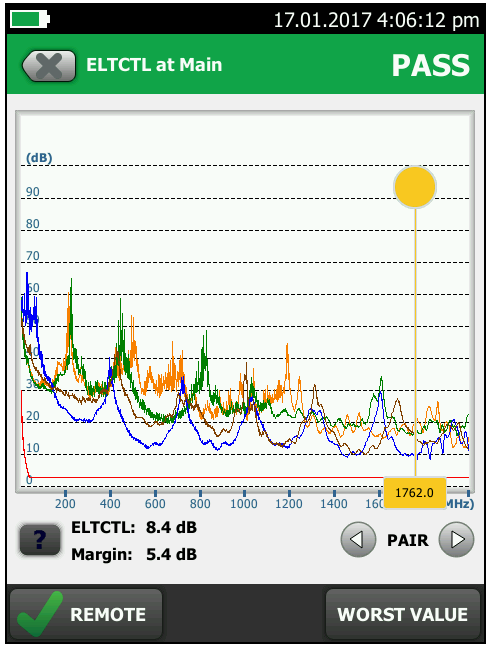

GPU80.PNG

Figure 69. ELTCTL Plot

DIAGNOSTIC and FAULT INFO Tabs

If the Autotest failed or had a marginal result, the **FAULT INFO** tab shows. If the test passed and you selected **All Autotests** for the **HDTDR/HDTDX** setting on the **TEST SETUP** screen, the **DIAGNOSTIC** tab shows. These tabs let you see the HDTDR and HDTDX analyzer plots. The plots help you find the causes of NEXT and return loss failures. See Chapter 6.

About dB Rules

For some test limits, the tester ignores the PASS/FAIL result from some tests when a measurement is better than a specified value. For example, the return loss measurement is not evaluated against the limit at frequencies where insertion loss is less than 3 dB. This is the 3 dB rule.

When a measurement is not evaluated against a limit, the tester shows an **i** for the result. On the plot for that measurement, the limit line is black where the result is not evaluated against the limit, as shown in Figure 70. When you upload the results to LinkWare PC, **N/A** shows for the result.

The next sections summarize the dB rules. Tables 4 and 5 show the dB rules that apply to each test and the test limits that use the rules. For more information, see the Knowledge Base on the Fluke Networks website.

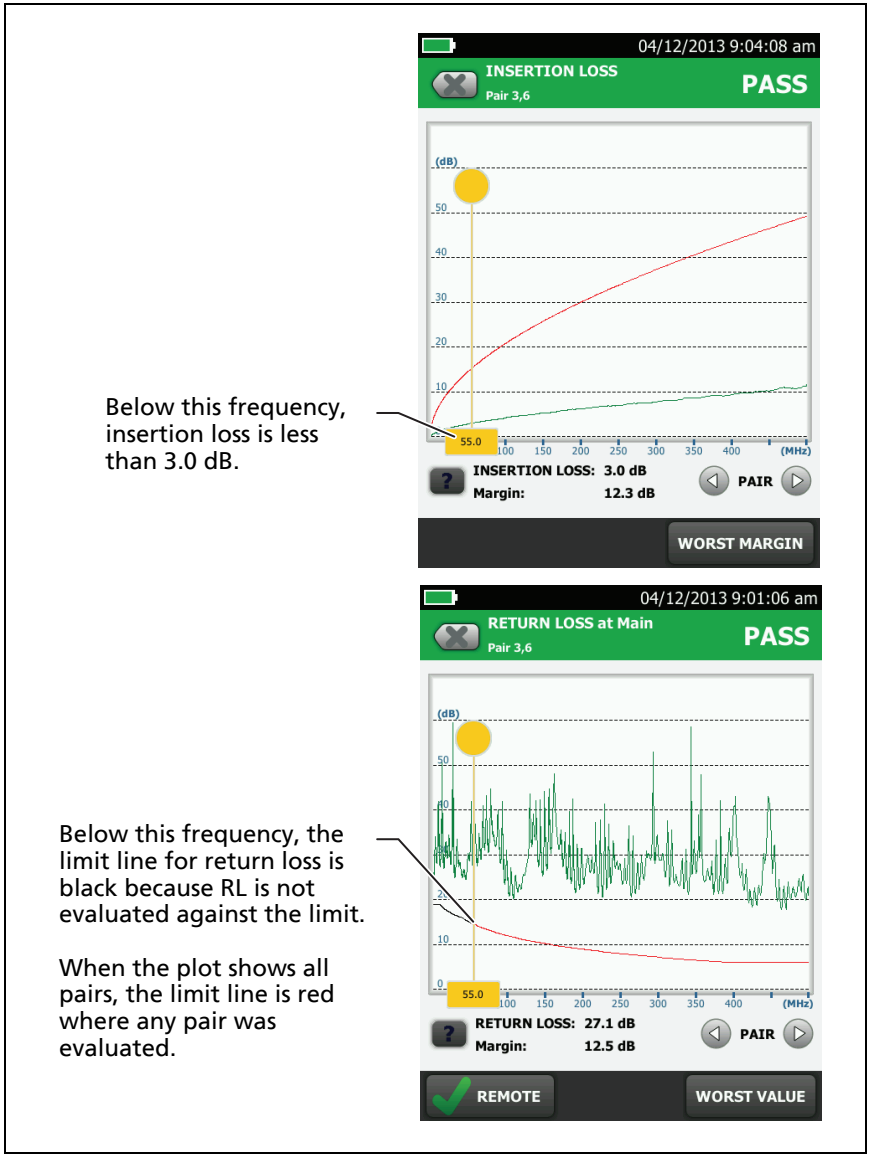

GPU58.EPS

Figure 70. How the 3 dB Rule Shows on Plots

3 dB Rule

At frequencies where insertion loss is less than 3.0 dB for a pair, return loss for that pair is not evaluated against a limit. See Tables 4 and 5 for applicable limits.

4 dB Rule

This rule applies to these ISO limits:

- ISO/IEC 11801
- EN 50173
- Aus/NZ
- JIS

At frequencies where insertion loss is less than 4.0 dB for the pair used as the receive pair for the test, the measurements shown in Table 5 are not evaluated against a limit.

12 dB Rule

This rule applies to these ISO test limits:

- ISO11801 Channel Class E_A
- ISO11801 PL Class E_A

If insertion loss at 450 MHz is less than 12 dB for both pairs, the tester uses a relaxed limit for NEXT. If the standard and relaxed limits both apply to a plot, the plot shows both limit lines. See the Knowledge Base on the Fluke Networks website for details.

15 dB Rule

This rule applies to these ISO test limits:

- ISO11801 PL Class I
- ISO11801 PL Class II

If insertion loss at 1,600 MHz is less than 15 dB, the tester uses alternate return loss limits.

67 dB Rule for ACR-F and PS ACR-F

At frequencies where FEXT or PS FEXT is better than 67 dB, ACR-F or PS ACR-F are not evaluated against a limit. See Tables 4 and 5 for applicable limits.

70 dB Rule for ACR-F and PS ACR-F

These rules applies to all channel or permanent link test limits where ACR-F is measured.

At frequencies where FEXT or PS FEXT is better than 70 dB, ACR-F or PS ACR-F are not evaluated against a limit. See Tables 4 and 5 for applicable limits.

75 dB Rule for ACR-F and PS ACR-F

These rules apply to TIA Cat 8 limits at frequencies above 200 MHz.

At frequencies where FEXT or PS FEXT is better than 75 dB, ACR-F or PS ACR-F are not evaluated against a limit. See Table 4 for applicable limits.

Table 4. dB Rules for TIA Test Limits

Measurement	Cat 5e/6/6A Permanent Link	Cat 5e/6/6A Channel	Cat 8 Permanent Link	Cat 8 Channel
Return Loss[1]	3 dB	3 dB	3 dB	3 dB
ACR-F	67 dB[2]	70 dB[3]	75 dB[4]	70 dB[5]
PS ACR-F			75 dB[4]	67 dB[6]

1. If insertion loss is better than 3 dB, Return Loss measurements show an .
2. If FEXT or PS FEXT is better than 67 dB, ACR-F and PS ACR-F measurements show an .
3. If FEXT or PS FEXT is better than 70 dB, ACR-F or PS ACR-F measurements show an .
4. For frequencies above 200 MHz, if FEXT or PS FEXT is better than 75 dB, ACR-F or PS ACR-F measurements show an .
5. For frequencies above 200 MHz, if FEXT is better than 70 dB, ACR-F measurements show an .
6. For frequencies above 200 MHz, if PS FEXT is better than 67 dB, PS ACR-F measurements show an .

Table 5. dB Rules for ISO Test Limits

Measurement	Class D, E, E_A, F, F_A, I, II Permanent Link	Class D, E, E_A, F, F_A, I, II Channel
Return Loss[1]	3 dB	3 dB
NEXT/PS NEXT[2]	4 dB	4 dB
ACR-N/PS ACR-N[2]	4 dB	4 dB
ACR-F[3]	70 dB	70 dB
PS-ACR-F	70 dB[4]	67 dB[5]

1. If insertion loss is better than 3 dB, Return Loss measurements show an .
2. If insertion loss is better than 4 dB, these measurements show an .
3. If FEXT is better than 70 dB, ACR-F measurements show an .
4. If PS FEXT is better than 70 dB, PS ACR-F measurements show an .
5. If PS FEXT is better than 67 dB, PS ACR-F measurements show an .

How to Use the Tone Generator

The tone generator on the main and remote lets you use a tone probe, such as the Fluke Networks IntelliTone™ probe, to locate cables or jacks. The tone probe converts the tone generator's signal to audible tones. The tones get louder as you move the probe closer to the cable or jack connected to the tester. The main tester can transmit four different tones.

Note

The tone generator does not generate the IntelliTone signal.

The tone generator also turns on an inactive main or remote DSX CableAnalyzer connected to the other end of the cable.

To use the tone generator

1. Attach a link interface adapter to the main or remote tester.
2. Connect the tester to a cable.
3. Turn on the tone generator:
   - Main tester: Press ✔TEST or tap **TOOLS** > **Tone Generator**. To change the tone, tap **CHANGE TONE**.
   - Remote tester: Press ✔TEST.
4. Use a tone probe to locate the cable or jack that transmits the tone.

Notes

A tone probe possibly cannot detect the tone generator's signal along shielded cable, but can detect the signal at the cable's jack.

If you connect a tester to the other end of the cable, the tone generator turns off.

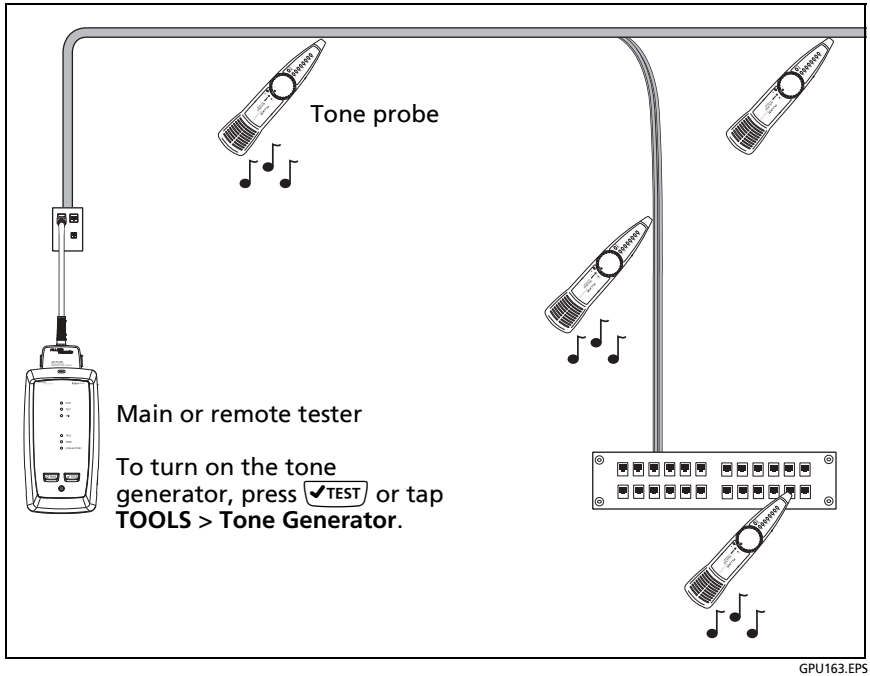

Figure 71. How to Use the Tone Generator

How to Use the Talk Function

If you have two testers and two DSX CableAnalyzer modules, you can use the talk function to talk to the person at the other end of a twisted pair link.

Note

The talk mode does not operate during tests.

To use the talk function

1. Connect the main and remote testers together through a link that has one or more good wire pairs.
2. Connect headsets to the headset jacks on the testers (see Figure 21 on page 72).
3. Press the button on one of the headset microphones or press TALK on the remote tester, then speak into the microphone.

   When the talk function is on,  shows at the top of the screen on the main tester. On the remote tester, the **TALK** LED is on.
4. To adjust the volume at the main tester, press the button on the headset's microphone as necessary, or move the slider control in the **Talk Enabled** window.

   To adjust the volume at the remote tester, press TALK or the button on the headset's microphone as necessary. The LEDs on the remote show the volume level.
5. To turn off the talk function, hold down the button on one of the headsets or hold down TALK on the remote tester.

Long-Range Communication Mode (DSX-5000)

DSX-5000 modules have a long-range communication mode that lets you do tests on very long cables, such as spools of cable and long links used for voice communications. The DSX-5000 automatically uses this mode when the cable is too long for normal communications between the main and remote testers. For example, a Cat 6 cable longer than approximately 200 m will cause the testers to use long-range communication mode.

When the testers use long-range communication mode, the arrows on the connection icon are orange: 

Note

Tests take more time to complete in long-range communication mode. For example, an Autotest can take 90 seconds to two minutes to complete.

A very long cable will fail the Autotest, but you can measure cable length and compare other results to results from a known- good cable of the same length to see if the cable is good.

About the AxTalk Analyzer Kit

The DSX-8000 kit includes the hardware you need to do tests for alien crosstalk on twisted pair cabling. Alien crosstalk is noise, or crosstalk, transmitted between adjacent cables in a bundle or patch panel. Alien crosstalk is a primary source of noise in cabling used for 10GBASE-T applications and above.

The AxTalk Analyzer kit is available as an option for the DSX-5000.

For instructions on how to do alien crosstalk tests, install the AxTalk Analyzer software, which is available on the Fluke Networks website, then see the online help in the software.

Chapter 4: Test Twisted Pair Through a PoE Device (DSX-5000)

The AC wire map test lets you see the wire maps of links connected through midspan PoE (Power over Ethernet) devices. Midspan PoE devices block the DC signals the tester uses to do the wire map test. When you turn on the AC wire map test, the tester uses AC signals instead of DC signals for the wire map test. This setting does not change how the tester does other tests.

Note

The DSX-8000 modules do not support the AC wire map test.

How to Turn On the AC Wire Map Test

Note

*The **AC Wire Map** test is not available when a DSX-8000 module is installed.*

1. On the home screen, tap the test setup panel.
2. On the **CHANGE TEST** screen, select a twisted pair test to change, then tap **EDIT**.
3. On the **TEST SETUP** screen, tap the **AC Wire Map** control to set it to **On**.
4. Tap **SAVE**.

When the **AC Wire Map** test is on, this icon shows on the home screen: 

When to Keep the AC Wire Map Test Off

- Turn off the AC wire map test when you do not do tests through PoE devices. The test can increase the time taken for an Autotest.
- Turn off the AC wire map test when you select TIA Cat 6 or 6A or Class E or E_A limits. The return loss test on PoE devices will always fail with these limits because PoE devices are not designed to operate with protocols above 1000BASE-T. To use those limits on a link that has PoE, do not do tests through the PoE device.
- Turn off the AC wire map test if the PoE device supplies power on pairs 4,5 and 7,8. In those devices, the inputs and outputs are fully isolated on those pairs. To do tests through those devices, use a PoE test limit such as **POE 2-Pair Cat 6 Perm. Link**. The PoE limits are in the **Application** group on the **TEST LIMIT** screen.

How to Do an Autotest Through a PoE Device

1. Turn on the **AC Wire Map** test.
2. Make sure that the other settings shown on the home screen are correct.
3. Connect to the cabling as shown in Figure for a permanent link or Figure 73 for a channel
4. Make sure that the PoE device is turned off.
5. Do an Autotest as described on page 90.

Notes

When you turn on the AC wire map test:

- *The Autotest takes more time.*
- *The tester does not do some tests, such the resistance test and the shield test.*
- *The Autotest does not stop if there is a wire map fault.*
- *The tester does not do a continuity test on the shield.*

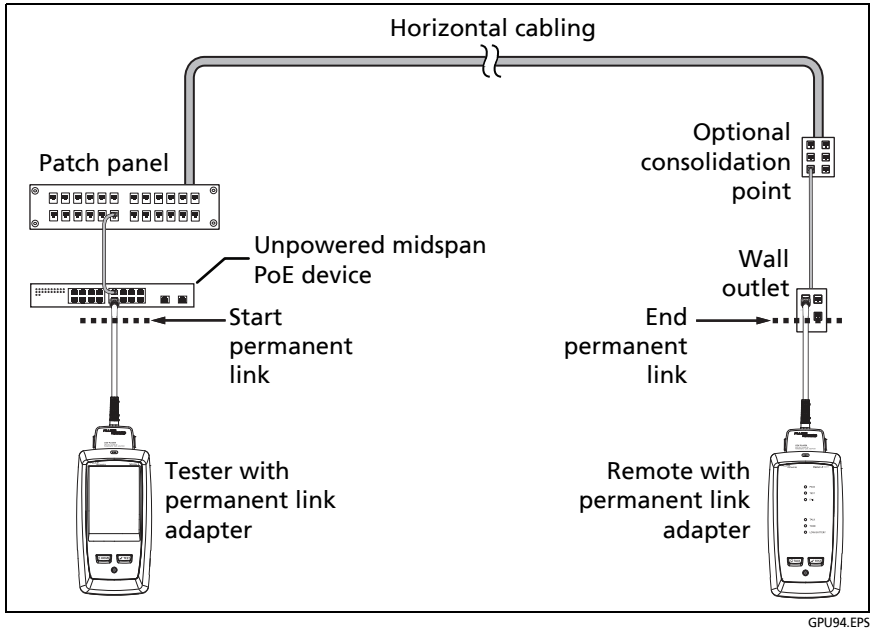

Figure 72. Permanent Link Connections Through a PoE Device

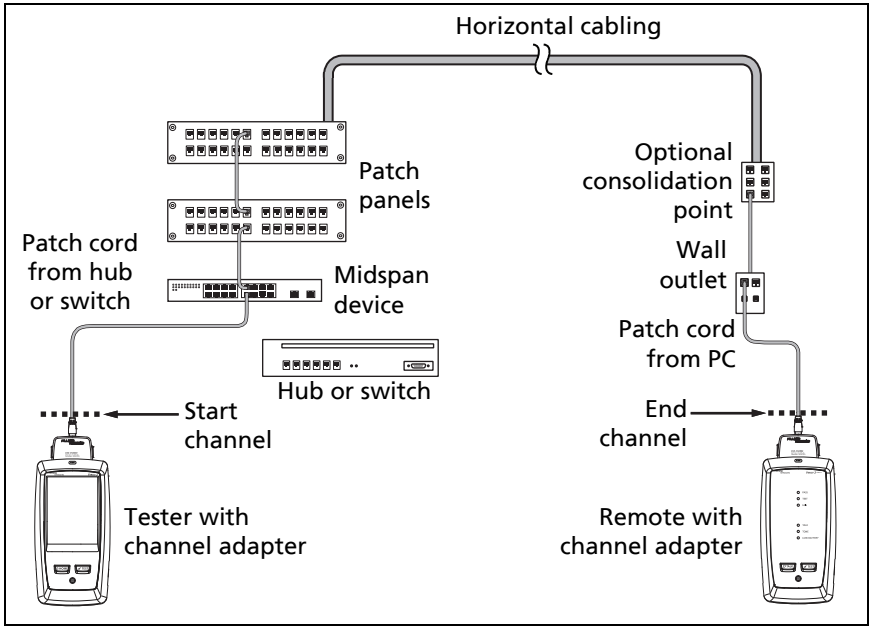

Figure 73. Channel Connections Through a PoE Device

AC Wire Map Results

AC wire map results are similar to the wire map results shown in Chapter 3. In some cases, the fault information given by AC wire maps is less specific. For example, if a wire is shorted to a wire in another pair, the AC wire map shows all four wires shorted. This occurs because the AC electrical characteristics of some faults prevent some types of measurements.

Figures 74 and 75 show examples of AC wire map screens.

When the tester cannot show the wire map because it has multiple faults, it shows a list of the faults (see Figure 75).

Note

To isolate faults when the tester shows limited wire map information, turn off the AC wire map test, then do tests on the cabling after the PoE device. Also do a test on the patch cord that connects the PoE device to the link.

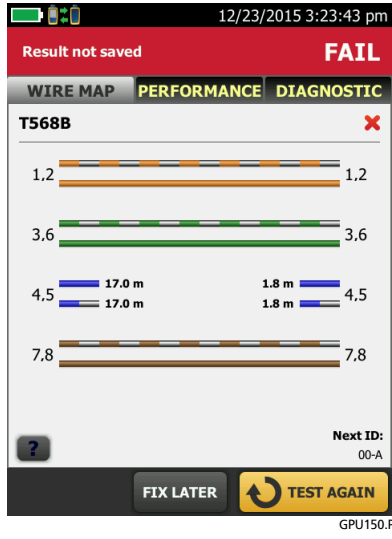

GPU150.PNG

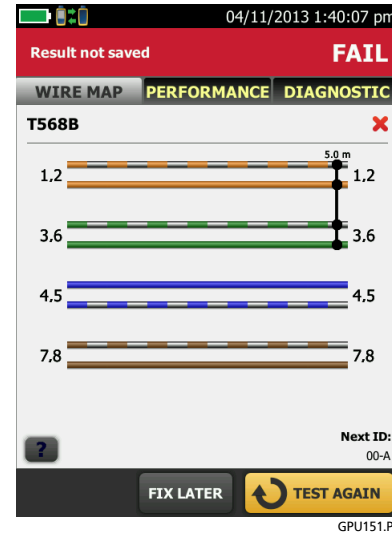

GPU151.PNG

Open	**Short**
Open on pair 4,5. The open is 17 m from the tester and 1.8 m from the remote. The open is on one or both wires.	Short between pairs 1,2 and 3,6. The short is 5 m from the remote. The short is between two, three, or all four wires.

Figure 74. AC Wire Map Examples: Open and Short

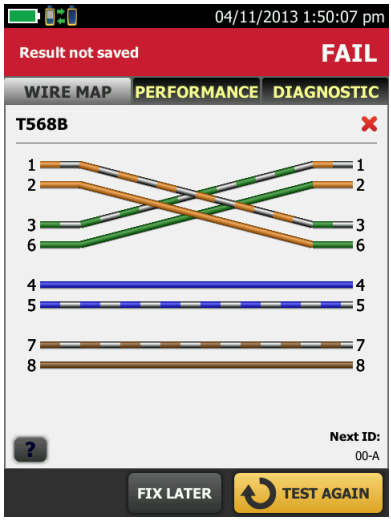

GPU152.PNG

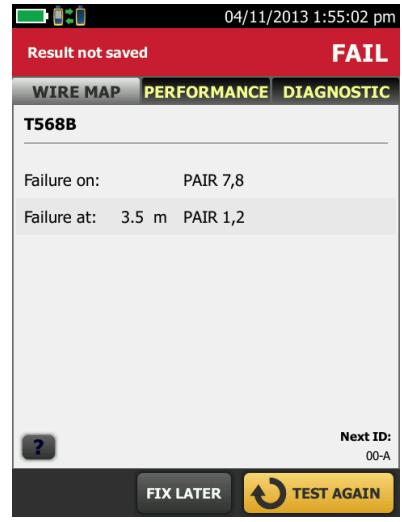

GPU153.PNG

Crossed pairs	**Multiple faults**
Pairs 1,2 and 3,6 are crossed.	This cable has a short between wires 6 and 7 and an open on pin 2. For some combinations of faults, the tester cannot show the wire map because the AC electrical characteristics of some faults prevent some types of measurements.

Figure 75. AC Wire Map Examples:

Chapter 5: Certify Coaxial Cabling

The optional DSX-CHA003 coaxial adapters let you use the DSX CableAnalyzer to certify coaxial cabling for network and video applications.

Set the Reference for Coaxial Tests

To use DSX-CHA003 adapters, you must set the reference for coaxial tests. The reference procedure sets a baseline for insertion loss and resistance measurements.

Set the reference at these times:

- When you want to use the tester with a different module. The tester can save reference values for eight different pairs of modules.
- Every 30 days, at minimum.
- To ensure maximum accuracy of test results, set the reference daily.

Note

It is not necessary to set the reference again if you use different coaxial adapters.

To set the reference

1 Make the connections shown in Figure 76.

2 Turn on the tester and the remote a minimum of 5 minutes before you set the reference.

(continued)

Notes

Set the reference only after the testers are at an ambient temperature between 10 °C and 40 °C (50 °F and 104 °F).

The tester will not let you set the reference if the patch cord is longer than 30 cm (12 in).

You can also set the reference with a 50 Ω patch cord.

3 On the home screen, select a coaxial cable test.

4 On the home screen, tap **TOOLS**, then tap **Set Reference**.

5 On the **SET REFERENCE** screen tap **TEST**.

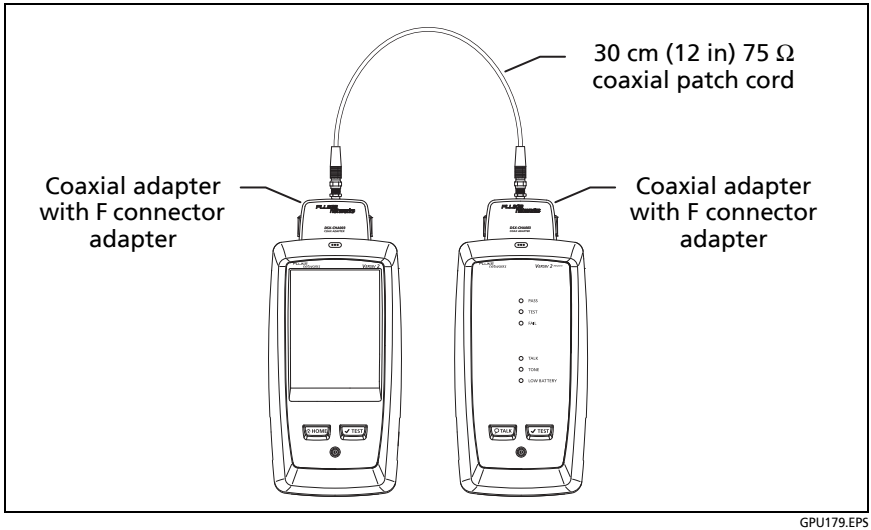

GPU179.EPS

Figure 76. Reference Connections for Tests on Coaxial Cabling

Settings for Coaxial Tests

Table 6 gives descriptions of the settings for coaxial tests. To set up a project, which includes the settings in Table 6, cable IDs, and operator names, see Chapter 17.

To set up a coaxial test

1 On the home screen, tap the test setup panel.

2 On the **CHANGE TEST** screen, select a coaxial test to change, then tap **EDIT**.

Or to set up a new coaxial test, tap **NEW TEST**. If no module is installed, the **MODULE** screen shows. Tap **DSX-8000 CableAnalyzer** or **DSX-5000 CableAnalyzer**.

3 On the **TEST SETUP** screen, tap the panels to change settings for the test. See Table 6.

4 On the **TEST SETUP** screen, tap **SAVE** when your test setup is completed.

5 On the **CHANGE TEST** screen, make sure the button next to the test is selected, then tap **USE SELECTED**.

Table 6. Settings for Coaxial Tests

Setting	Description
Module	Select **DSX-8000 CableAnalyzer** or **DSX-5000 CableAnalyzer**.
Cable Type	Select a cable type that is correct for the type you will test. To see a different group of cable types, tap **MORE**, then tap a group. To make a custom cable type, see Chapter 19.
NVP	Nominal velocity of propagation. The tester uses the NVP and the propagation delay to calculate the length of the cable. The default value is defined by the selected cable type and is the typical NVP for that cable type. To enter a different value, tap the **NVP** panel, then tap or on the **NVP** screen to increase or decrease the value. To find the actual value for a cable, connect a known length of the cable to the tester, tap **MEASURE** on the **NVP** screen, then change the NVP until the measured length matches the known length. Use a cable at least 30 m (100 ft) long. When you increase the NVP value, the calculated length increases.
Test Limit	Select the correct test limit for the job. To see a different group of limits, tap **MORE**, then tap the name of a group.
Store Plot Data	**Off** : The tester does not save plot data for insertion loss or for the HDTDR analyzer. You can see the plots before you save the test and exit the results screen. The saved results show insertion loss measurements in a table and do not include the HDTDR plot. **On** : The tester saves plot data for the insertion loss test and for the HDTDR analyzer.

How to Do an Autotest

Figure 77 shows the equipment for tests on coaxial cabling.

Note

You can do the HDTDR, length, and resistance tests without a remote tester. See "Tests Without a Remote" on page 184.

1 Attach coaxial adapters to the main and remote testers.

2 Make sure that the home screen shows the correct settings for the job.

To make sure that other settings are correct, tap the test setup panel, make sure the correct test is selected on the **CHANGE TEST SCREEN**, then tap **EDIT** to see more settings. Table 6 on page 172 describes the settings.

3 Connect the testers to the link as shown in Figure 78.

⚠Caution

To make sure your results are reliable:

- **Disconnect all taps and devices from the cable.**
- **Do not do tests through splitters (See "About Splitters" on page 183).**

4 Tap **TEST** on the main tester or press ✔TEST on the main or remote tester.

If the tester at the other end of the cable is in sleep mode or is off, your tester's tone generator turns on the other tester.

If the two testers are not connected:

- Your tester's tone generator stays on so you can use a tone probe to find the cable to connect to the other tester.

- Or, tap **MEASURE** to do the length and resistance tests, which do not require a remote tester. Because the tester cannot complete all tests, and the reflection at the end of the cable exceeds the 15% limit for the HDTDR test, the result for an Autotest without a remote is always **FAIL**.

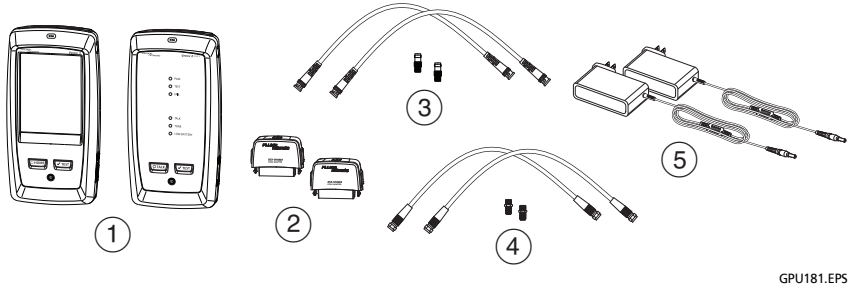

① Main and remote testers with DSX CableAnalyzer modules installed

② Two DSX-CHA003 adapters

③ For tests on network cabling: F-connector to BNC adapters and patch cords (typically 50 Ω)

④ For tests on video cabling: F-connector adapters and patch cords (typically 75 Ω)

⑤ AC adapters (optional)

Figure 77. Equipment for Tests on Coaxial Cabling

Note

If you have two main testers, you can use one as a remote. To select the remote function, tap ***TOOLS*** *>* ***Main as Remote****.*

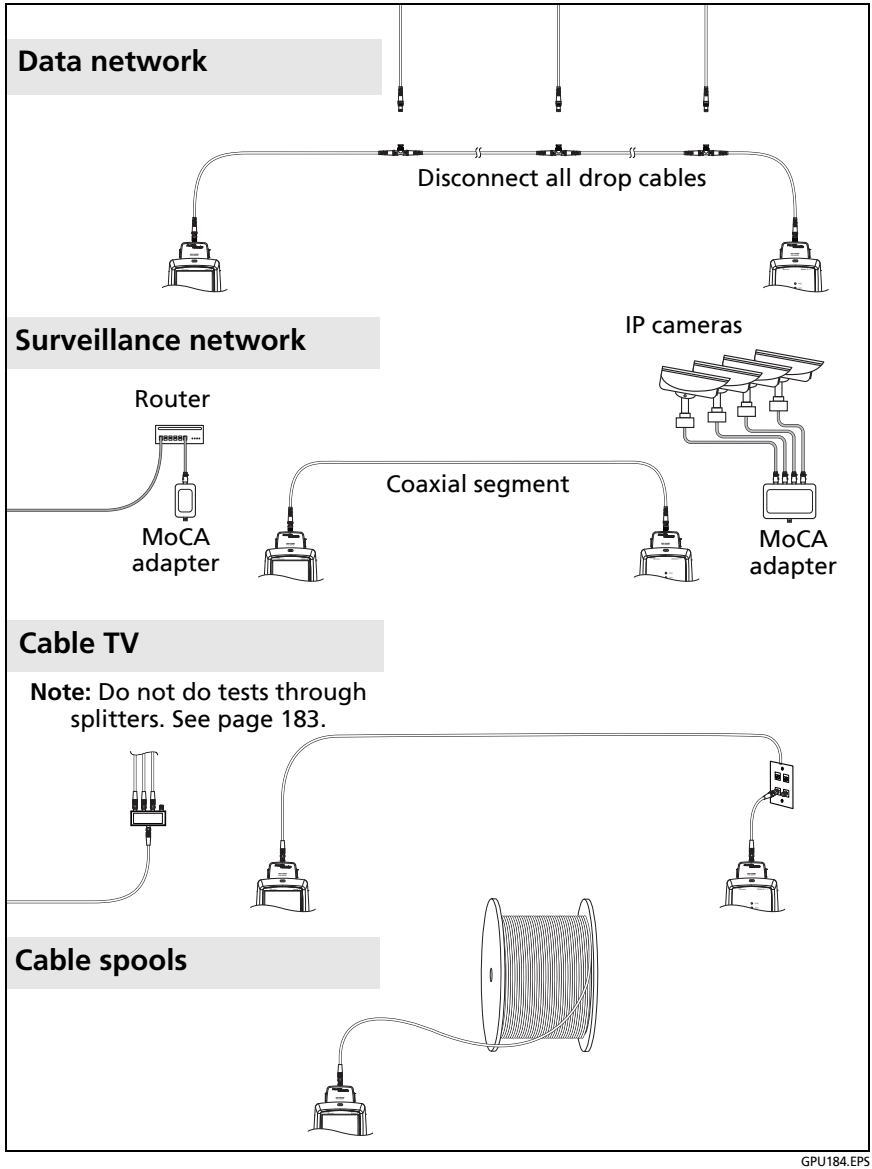

Figure 78. Examples of Connections for Tests on Coaxial Cabling

Coaxial Autotest Results

Note

Not all test limits include all the tests shown in Figure 79.

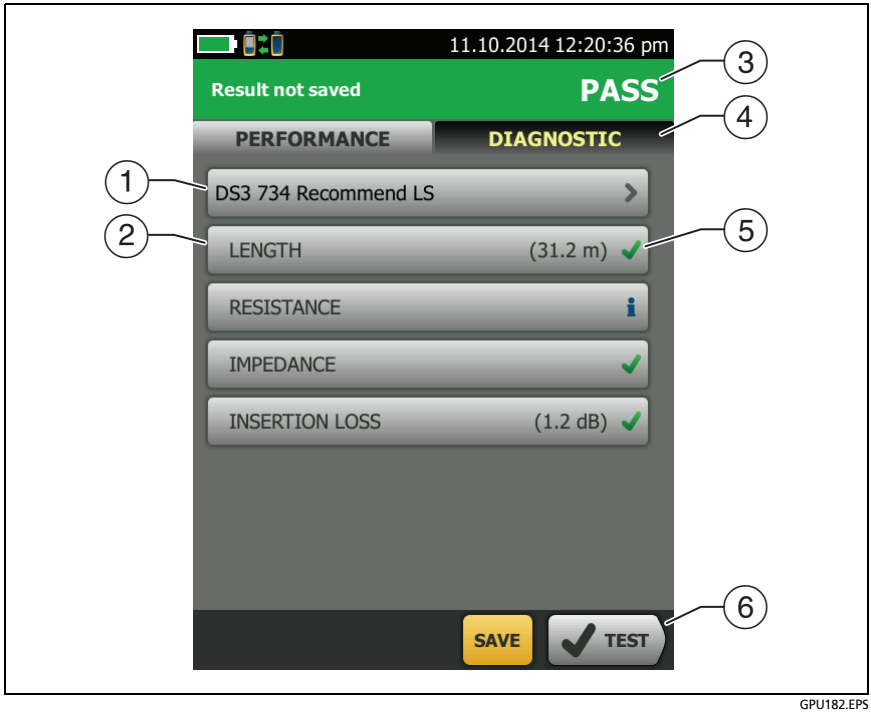

Figure 79. Autotest Results for Coaxial Cabling

① The test limit and cable type used for the test.

② To see detailed results for a test, tap the panel.

③ The overall result for the Autotest. If the result shows an asterisk, See "PASS*/FAIL* Results" on page 101.

④ The **DIAGNOSTIC** tab shows the HDTDR analyzer button, which you can tap to see the HDTDR plot. The plot helps you find faults on the cable. The HDTDR plot for coaxial cable includes limit lines and a **PASS/FAIL** result. See "The HDTDR Analyzer" on page 198.

⑤ The overall result for the test:

 The results exceed the limit.

 The results are within the limit.

 The selected test limit does not have a limit for the test.

 The results are within the range of accuracy uncertainty for the tester. See "PASS*/FAIL* Results" on page 101.

The measurement shown for the insertion loss plot is the worst value if the test passed, or the worst margin if the test failed.

⑥ When more than one button shows at the bottom of the screen, the tester highlights one in yellow to recommend which one to tap. See "Buttons to Do Tests and Save Results" on page 63.

To do the resistance test continuously, select the test from the **TOOLS** menu. This function helps you locate intermittent faults.

Length and Propagation Delay

The length measurement shows the length of the center conductor in the cabling.

Differences between measured and actual lengths can be caused by variations in the cable's NVP value. NVP values can vary among cable types, lots, and manufacturers. In most cases, these differences are minor and may be ignored.

Propagation delay is the time taken for a test pulse to get to the end of the cable. The delay is measured in nanoseconds. One nanosecond is one-billionth of a second, or 0.000000001 second.

Figure 80 shows the results from a length test.

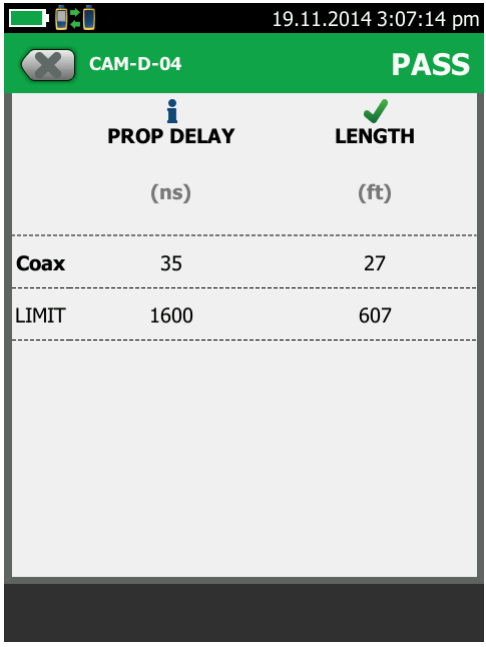

GPU185.PNG

Figure 80. Coaxial Length and Propagation Delay Results

Resistance

The resistance measurement is the DC loop resistance of the center conductor and the shield. The remote puts a short between the conductor and the shield to make the loop.

Most coaxial standards do not have a limit for resistance. The tester shows an ℹ when there is no limit.

Note

*The resistance test on the **TOOLS** > **Single Tests** menu lets you measure resistance continuously. This function can help you locate intermittent faults.*

Figure 81 shows the results from a resistance test.



GPU186.PNG

Figure 81. Coaxial Resistance Results

Impedance

Note

The minimum cable length for an impedance measurement is 13 ft (4 m). For impedance measurements on shorter cables, the tester shows ***Cable too short****, and an*  *for the impedance and overall test results.*

The impedance measurement shows the approximate characteristic impedance of the cable at a point approximately 13 ft (4 m) from the tester.

Characteristic impedance is the impedance a cable would have if the cable were infinitely long. Good cabling has relatively constant characteristic impedance throughout the cable and connectors.

Changes in impedance cause signal reflections in cabling. In computer networks, signal reflections can cause network faults. In video systems, reflections can cause poor picture quality.

Figure 82 shows the results from an impedance test.

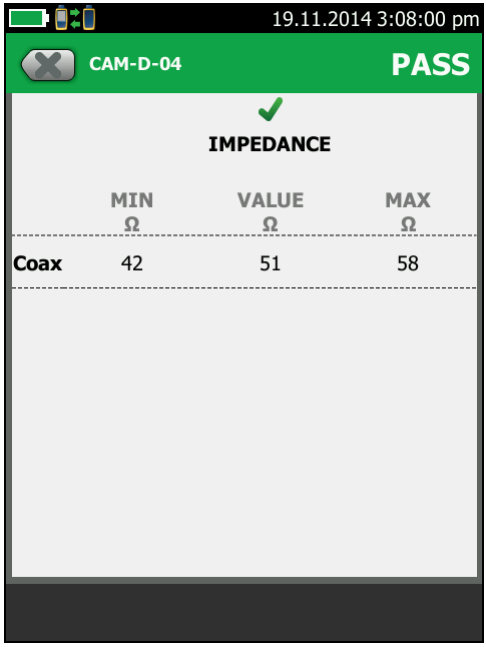

GPU187.PNG

Figure 82. Coaxial Impedance Results

Insertion Loss

Insertion loss is the loss of signal strength over the cabling. Insertion loss is caused by the DC resistance of the copper wire and connecting hardware, the impedance of the conductor, and by leakage of electrical energy through the cable's insulation. Lower values of insertion loss mean better cabling performance.

At higher frequencies, signals tend to travel only near the surface of a conductor. This "skin effect", along with the cabling's inductance and capacitance, cause insertion loss to increase with frequency.

Figure 83 shows the results from an insertion loss test.

Note

For some test limits, such as the CATV and DS3 limits, the tester uses the measured length to calculate the limit for insertion loss.

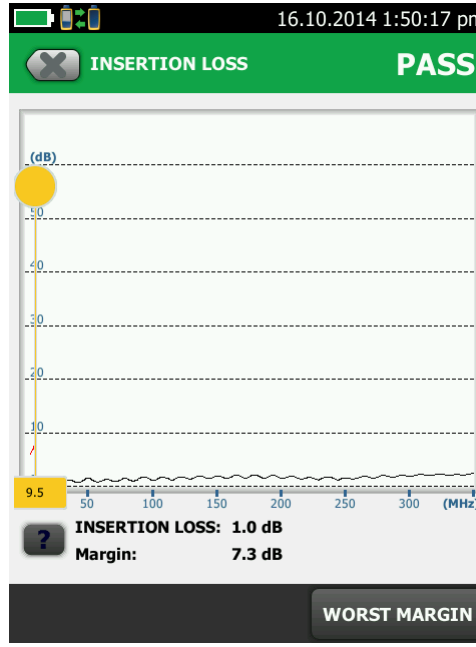

GPU188.PNG

Figure 83. Coaxial Insertion Loss Results

About Splitters

If you get these results, there might be a splitter on the cable:

- The tester cannot find the remote.
- The tester looses communication with the remote. The test might continue, then loose communication again as the splitter interferes with the communication signal.
- The length test shows **End not found**.
- The resistance test shows an open.
- The HDTDR plot shows a reflection that has an unusual shape.

Because splitters can cause unreliable test results, you should not do tests through them.

Tests Without a Remote

You can do the length, resistance, and HDTDR tests without a remote tester. Table 7 describes the effects of a remote on tests.

1. Attach a coaxial adapter to the main tester.
2. Make sure that the home screen shows the correct settings for the job.

   To make sure that other settings are correct, tap the test setup panel, make sure the correct test is selected on the **CHANGE TEST SCREEN**, then tap **EDIT** to see more settings. Table 6 on page 172 describes the settings.
3. Connect the tester as shown in Figure 84.
4. To do an Autotest: Tap **TEST** on the main tester or press ✔TEST on the main or remote tester. When the **MEASURE** button shows, tap it to do the length and resistance tests, which do not require a remote tester.

   To do only the length or resistance test: On the home screen tap **TOOLS** > **Single Tests**, then tap a test.

   To do only the HDTDR test: On the home screen tap **TOOLS** > **Diagnostics**, then tap **HDTDR**.

   Note

   *Because the tester cannot complete all tests, and the reflection at the end of the cable exceeds the 15% limit for the HDTDR test, the result for an Autotest without a remote is always **FAIL**.*

Table 7. Remote Requirements for Coaxial Tests

Test	Remote Requirements*
HDTDR analyzer	Optional. Without a remote, the plot shows large reflections at the end of the cabling.
Resistance	A remote or a terminator is required for a loop resistance measurement.
Length	Not required. Because a coaxial cable terminator eliminates signal reflections, the tester cannot measure the length of terminated cabling. The tester shows **End not found** in this case.
Impedance	Optional. Without a remote or terminator, the tester cannot measure the impedance of cables longer than 984 ft (300 m). The tester shows **Unknown** in this case.
Propagation delay	Not required. Because a coaxial cable terminator eliminates signal reflections, the tester cannot measure the propagation delay of terminated cabling. In this case, the tester shows **End not found**.
Insertion Loss	Required.

* If a remote is not required for a test, the test runs without activating the toner when no remote is detected.

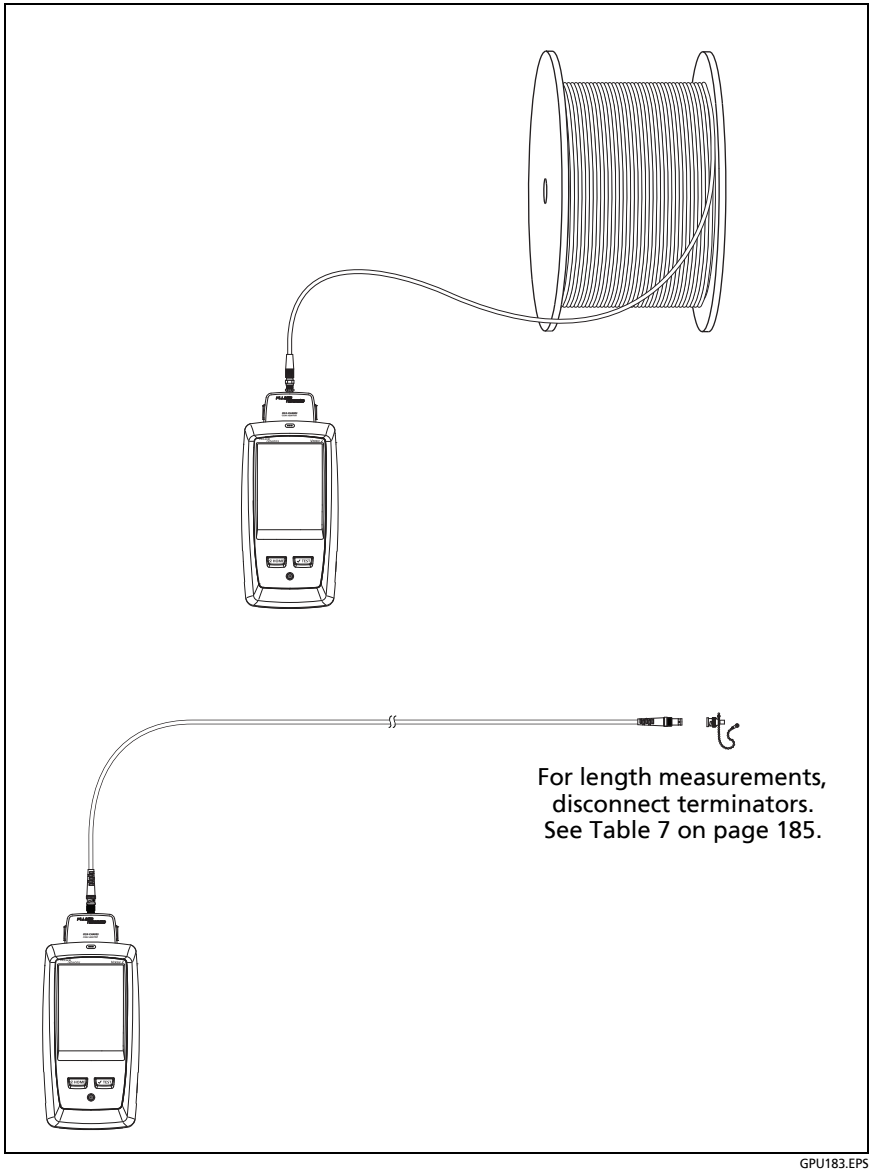

Figure 84. Connections for Coaxial Tests Without a Remote

Continuous Tests

To do the length or resistance test continuously, go to the home screen, tap **TOOLS** > **Single Tests,** then tap a test.

The length and resistance tests do not compare the results to a test limit.

To save the result, tap **SCAN OFF** > **SAVE**. The saved test has an for the overall result.

Chapter 6: Diagnose Copper Test Failures

Fault Information

If an Autotest on twisted pair cabling fails, the DSX CableAnalyzer automatically gives you information about faults. The information includes wire maps, HDTDR and HDTDX analyzer plots, and fault information. To see the information, tap the **FAULT INFO** tab after an Autotest. Figure 85 shows examples of fault information.

To get only HDTDR and HDTDX results, select **Diagnostics** from the **TOOLS** menu. These results do not include a **PASS/FAIL** status.

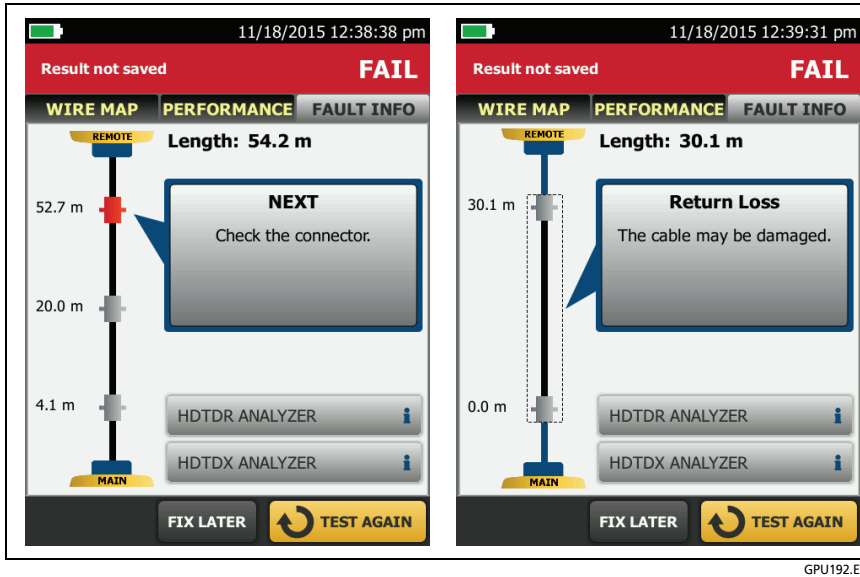

GPU192.EPS

Figure 85. Examples of FAULT INFO Screens for Faults on Twisted Pair

Types and Order of Faults Reported

When a cable has more than one fault, the tester shows the fault that you should fix first. For example, if the return loss test fails because the cable is bad, and the cable also has a NEXT failure due to a bad connector, you should replace the cable first.

The tester prioritizes faults in this order:

- Insertion loss failure due to cable lubricant
- Insertion loss failure due to excessive length
- Return loss failure due to DC resistance in connector contacts (This can cause an RL plot that looks like a problem with the cable, so you should fix this problem, then do the test again to see if RL still fails.)
- Return loss failure caused by the cable
- NEXT failure caused by the cable
- NEXT failure caused by poor termination or a poor-quality connector
- NEXT failure caused by too many connections for the selected test limit

The fault information screens show connectors in grey when other faults possibly affect the results for the connector.

For NEXT failures caused by multiple connectors, the screen shows the worst connector in red.

Future software releases may give additional information about faults. The latest software is available at no charge on the Fluke Networks website.

For more information on cable faults, including video training modules, see the Knowledge Base on the Fluke Networks website.

When the FAULT INFO Tab Does Not Show

To provide fault information, the tester needs TDR, crosstalk, and other results to do frequency and time domain analysis. For the settings and cables listed below, the **FAULT INFO** tab does not show because the tester cannot get the measurements it needs:

- The **HDTDR/HDTDX** setting on the **TEST SETUP** screen is set to **Never**.
- The **Cable Type** is set to Cat 3, Class F, Class F_A, or Class II.
- The link has only 2 pairs.
- The link has a wire map failure.

For the cables listed above, if you set **HDTDR/HDTDX** on the **TEST SETUP** screen to **Fail/Pass* only**, you can use the HDTDR and HDTDX analyzers to help you identify and locate faults. See "The HDTDR Analyzer" on page 198 and "The HDTDX Analyzer" on page 204.

Causes of Twisted Pair Test Failures

Table 8. Causes of Twisted Pair Test Failures

Wire Map test fails
Open • Wires connected to wrong pins at connector or punchdown blocks • Bad connection • Damaged connector or cable • Wrong application for the cable or the wrong outlet configuration is selected
Short • Damaged connector or cable • Conductive material stuck between pins at connector • Incorrect termination at a connector • Wrong application for the cable

Table 8. Causes of Twisted Pair Test Failures (continued)

Split pair, reversed pair, or crossed wires • Wires connected to wrong pins at connector or punchdown block *Note* *The HDTDX analyzer can help you locate split pairs. See page 198.*
Crossed pairs • Wires connected to wrong pins at connector or punchdown block • Mix of T568A and T568B wiring standards (1,2 and 3,6 crossed) • Crossover cables used where not needed (1,2 and 3,6 crossed) *Note* *To do the wire map test continuously while you look for a fault, tap **SCAN ON** on the **WIRE MAP FAIL** screen, or tap **TOOLS** > **Single Tests** > **Wire Map**.*
A test passes, but the plot shows that measurements exceed the limit A dB rule possibly applies. See "About dB Rules" on page 153.
Resistance test gives a FAIL, FAIL*, or PASS* result • Link is too long (may need to remove coiled service loops) • Bad connection due to oxidized or loose contacts • Wire gauge is too thin • Wires in a pair have too much difference in the number of twists (resistance is unbalanced) • Wrong type of patch cord used *Notes* *The HDTDR analyzer can help you locate the cause of a resistance failure. See page 208.* *To do the resistance test continuously while you look for a fault, tap **TOOLS** > **Single Tests** > **Resistance**.*

(continued)

Table 8. Causes of Twisted Pair Test Failures (continued)

Length gives a FAIL result • Link is too long (may need to remove coiled service loops) • NVP is set incorrectly *Note* *To do the length test continuously while you look for a fault, tap **TOOLS** > **Single Tests** > **Length**.*
Length exceeds the limit, but the length test did not fail If the length of the shortest pair does not exceed the limit by 10 %, then the length test passes even if other pairs exceed the limit. This is the 10 % rule for length, as given in the ANSI/TIA standard. See the Fluke Networks Knowledge base for details.
Propagation delay or delay skew gives a FAIL result • Link is too long (may need to remove coiled service loops) • Cable has different insulation materials on different pairs. This causes differences in the twist ratios, which causes differences in propagation delays among pairs.
"Bad patch cord" message (indicates excessive crosstalk over the first or last 2 m of the cabling) • Wire pairs are untwisted too much in the RJ45 plug • Poor quality patch cord used for channel • Cable on a permanent link interface adapter is badly distorted or damaged • Wrong test standard selected

(continued)

Table 8. Causes of Twisted Pair Test Failures (continued)

Insertion loss gives a FAIL, FAIL*, or PASS* result • Link is too long (may need to remove coiled service loops) • Poor quality patch cord • Bad connection (possibly shows insertion loss failure on only one or two pairs) • Wrong cable type in the installation • Wrong test standard selected • Wet lubricant in a conduit with unshielded cable. Possibly, the test will pass after the lubricant dries.
Characteristic impedance exceeds the limit or an anomaly is detected • Bad connection • Cable compression (tight cable ties, pinches, kinks, etc.) • Mismatch of cable types • Water in the cable jacket
Return loss gives a FAIL, FAIL*, or PASS* result • Patch cord or cable impedance not 100 Ω • Patch cord handling causing changes in impedance • Excessive amount of cable jammed into outlet box • Tight service loops in telecommunications closet • Excessive untwisting of pairs at connector • Poor quality connectors • Cable impedance not uniform (poor quality cable)

(continued)

Table 8. Causes of Twisted Pair Test Failures (continued)

Return loss gives a FAIL, FAIL*, or PASS* result (continued)

- Mismatches in cable construction (such as cable from different manufacturers)
- Water in the cable jacket (typically causes failures on all pairs at lower frequencies)
- Cable compression (tight cable ties, pinches, kinks, etc.)
- Poorly matched plug and jack (6A/Class E_A applications)
- Wrong test standard selected
- Defective link interface adapter

Note

The HDTDR analyzer can help you locate the cause of a return loss failure. See page 208.

NEXT, PS NEXT, ACR-N, PS ACR-N, ACR-F, PS ACR-F gives a FAIL, FAIL*, or PASS* result

- Excessive untwisting of pairs at a connector
- Poor quality patch cords
- Poor quality connectors
- Poor quality cable
- Poorly matched plug and jack (6A/Class E_A applications)
- Incorrect link interface adapter
- Cable compression that distorts the pattern of twists in the pairs (tight cable ties, pinches, kinks, etc.)
- Inappropriate use of couplers
- Excessive noise source near cabling under test
- Wrong test standard selected

Note

The HDTDX analyzer can help you locate the cause of a NEXT failure. See page 198.

Correcting NEXT problems usually corrects ACR-F problems.

(continued)

Table 8. Causes of Twisted Pair Test Failures (continued)

TCL or ELTCTL gives a FAIL, FAIL*, or PASS* result • Unequal untwisting of pairs at a connector • Poorly designed connectors • Poorly designed cable • Wrong test standard selected
CDNEXT gives a FAIL, FAIL*, or PASS* result • Unequal untwisting of pairs at a connector • Poorly designed connectors • Wrong test standard selected

Causes of Coaxial Test Failures

Table 9. Causes of Coaxial Test Failures

Resistance test gives a FAIL, FAIL*, or PASS* result • Link is too long (may need to remove coiled service loops) • Bad connection due to oxidized or loose contacts • Wrong type of patch cord used • For tests on terminated cable, the terminator's resistance is incorrect *Notes* *The HDTDR analyzer can help you locate the cause of a resistance failure. See "The HDTDR Analyzer" on page 198.* *To do the resistance test continuously while you look for a fault, tap **TOOLS** > **Single Tests** > **Resistance**.*
Length gives a FAIL result • Link is too long (may need to remove coiled service loops) • NVP is set incorrectly *Note* *To do the length test continuously while you look for a fault, tap **TOOLS** > **Single Tests** > **Length**.*

(continued)

Table 9. Causes of Coaxial Test Failures (continued)

Length gives an End Not Found result • A terminator is connected to the far end of the cable • The cable is connected to a splitter
Propagation delay gives a FAIL result Link is too long (may need to remove coiled service loops)
Insertion loss gives a FAIL, FAIL*, or PASS* result • Link is too long (may need to remove coiled service loops) • Poor quality patch cord • Bad connection • Wrong cable type in the installation • Wrong test standard selected
Characteristic impedance exceeds the limit • Bad connection • Cable compression (tight cable ties, pinches, kinks, etc.) • Mismatch of cable types • Water in the cable jacket • Incorrect terminator resistance
HDTDR test fails (a reflection exceeds the 15% limit) • Bad connection due to oxidized or loose contacts • Mismatch of cable types

The HDTDR Analyzer

While return loss test results shows return loss relative to frequency, the HDTDR™ (High-Definition Time Domain Reflectometry) analyzer shows return loss relative to its distance from the tester. The HDTDR plot shows the locations and amplitudes of return loss signals to help you find the causes of return loss failures.

After an Autotest on twisted pair cable, you can see HDTDR plot if the Autotest had a **FAIL**, **FAIL*** or **PASS*** result, or if **HDTDX/ HDTDR** on the **TEST SETUP** screen was set to **All Autotests** when you did the test.

For tests on coaxial cable, the HDTDR plot is always available after an Autotest.

To see the HDTDR plot for an Autotest, tap the **DIAGNOSTIC** tab or the **FAULT INFO** tab on the Autotest results screen, then tap **HDTDR ANALYZER**. Figure 86 shows an example of an HDTDR plot for twisted pair cable. Figure 87 shows how some common faults appear on HDTDR plots. Figure 88 shows an HDTDR plot for coaxial cable.

To get HDTDR analyzer results you can also tap **Tools** > **Diagnostics**.

Note

*If **Store Plot Data** is off, the tester does not include the HDTDR plot with results you save.*

Refer to Figure 86:

① The vertical scale shows the percentage of the signal reflected back to the main tester. The amplitudes of signals on the plot show how much the impedance of the cabling changes.

② The measurement cursor. The box at the bottom of the cursor shows the distance from the start of the cabling to the cursor.

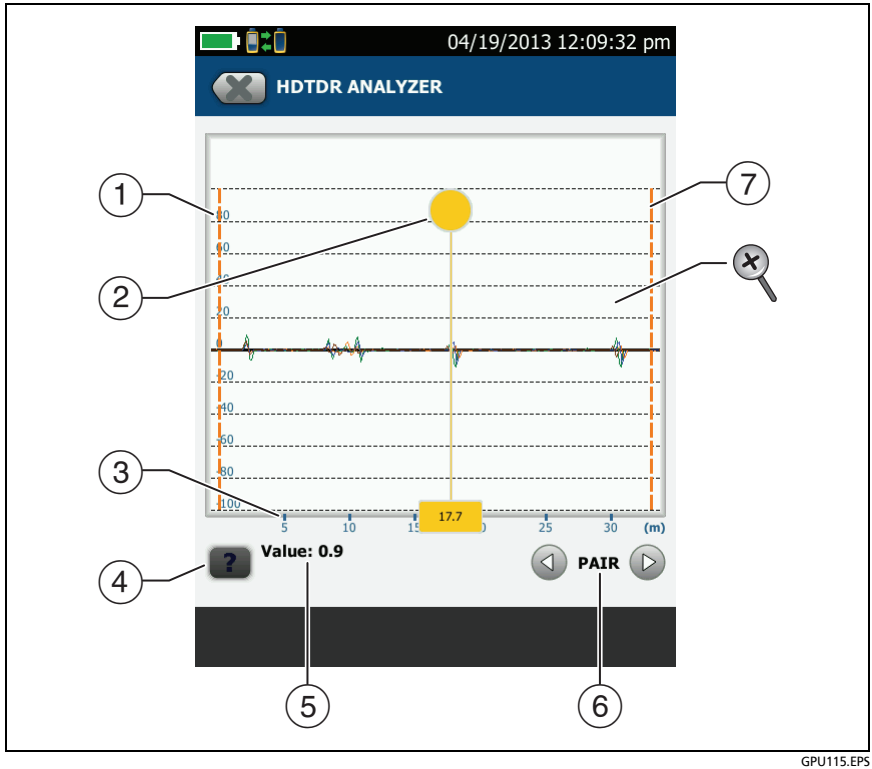

GPU115.EPS

Figure 86. HDTDR Plot for Twisted Pair Cable

To measure distance, tap the yellow circle so that **MARK** shows, drag the cursor to the start of the measurement, tap **MARK**, then drag the cursor to the end of the measurement. See "How to Use the Measurement Cursor on the HDTDR and HDTDX Plot" on page 208.

③ The horizontal scale shows the distance along the cabling.

④ Tap ? to see help for this screen.

⑤ The **Value** is the percentage of the signal reflected at the cursor's location. If the plot shows all cable pairs, the value shown is the largest of all the pairs.

The tester adjusts the values for insertion loss so they show the amplitudes of the signals at the sources of the reflections.

⑥ To see the plots for individual pairs, tap ◁ or ▷. To select pairs to show on the plot, touch ◁ or ▷ for one second to see the **SELECT PAIRS** window. Select the pairs you want to see, then tap **OK**.

⑦ The orange, dashed lines are at the start and end of the cabling that the tester includes in the test results.

To zoom in and out, use the pinch, reverse-pinch, and double-tap gestures on the touchscreen. You can also use the zoom controls to change the magnification on the distance and amplitude scales independently. See Figure 5 on page 25.

Note

For HDTDR plots for short cables such as patch cords, the tester does not change the magnification for the distance (horizontal) scale.

Refer to Figure 87:

① Open on pair 4,5 at approximately 24.3 m. A positive reflection is an increase in impedance.

② Short on pair 1,2 at approximately 13.4 m. A negative reflection is a decrease in impedance.

③ Bad patch cord approximately 18.3 m from the main tester. This patch cord was badly damaged.

④ A link with a section of cable that has water in the jacket.

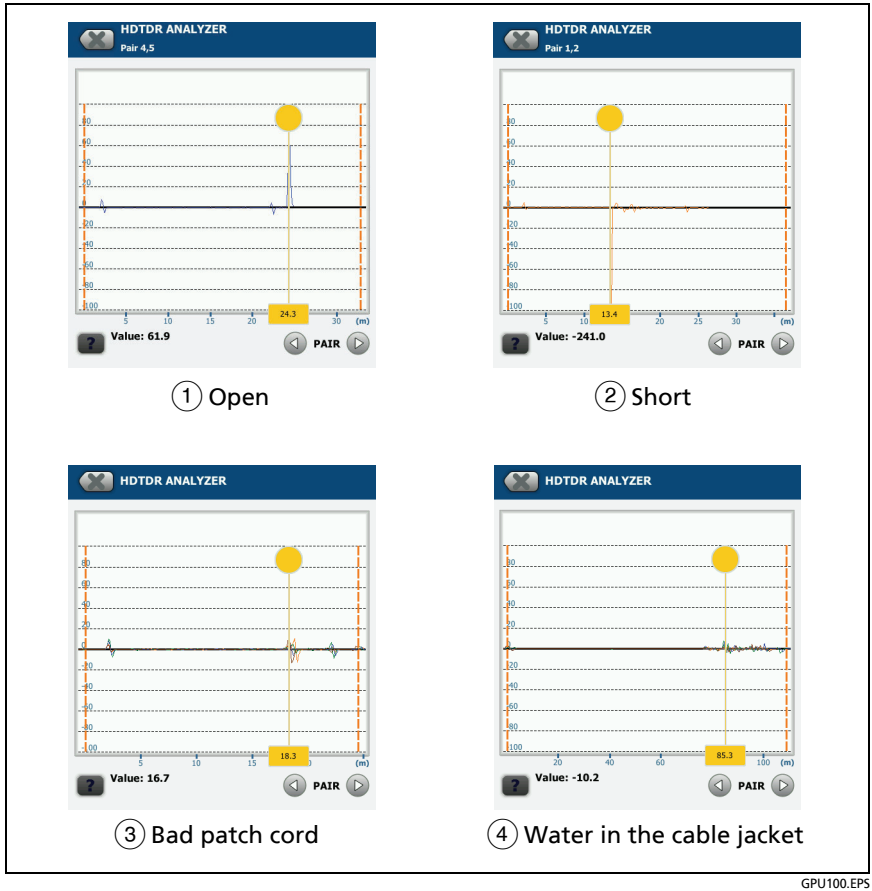

GPU100.EPS

Figure 87. Common Faults Shown on HDTDR Plots

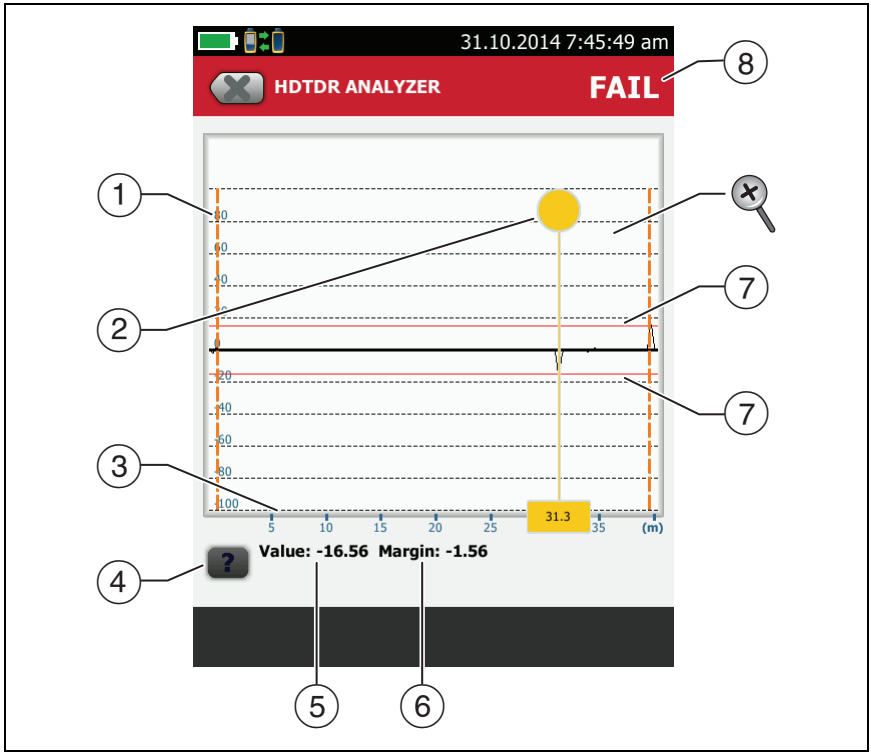

GPU189.EPS

Figure 88. HDTDR Plot for Coaxial Cable

① The vertical scale shows the percentage of the signal reflected back to the main tester. The amplitudes of signals on the plot show how much the impedance of the cabling changes.

② The measurement cursor. The box at the bottom of the cursor shows the distance from the start of the cabling to the cursor.

To measure distance, tap the yellow circle so that **MARK** shows, drag the cursor to the start of the measurement, tap **MARK**, then drag the cursor to the end of the measurement. See “How to Use the Measurement Cursor on the HDTDR and HDTDX Plot” on page 208.

③ The horizontal scale shows the distance along the cabling.

④ Tap ? to see help for this screen.

⑤ The **Value** is the percentage of the signal reflected at the cursor's location.

The tester adjusts the values for insertion loss so that they show the amplitudes of the signals at the sources of the reflections.

⑥ The margin is the difference between the measured value and the 15% reflection limit. The margin is negative if the value exceeds the limit.

⑦ The HDTDR plot for coaxial cable includes limit lines and a **PASS/FAIL** result. The lines are fixed at 15%. The tester uses these limits to give the test a **PASS/FAIL** result. Figure 88 shows a reflection at 31.3 m that exceeds the limit. The reflection was caused by a 50 Ω cable connected a 75 Ω cable.

To zoom in and out, use the pinch, reverse-pinch, and double-tap gestures on the touchscreen. You can also use the zoom controls to change the magnification on the distance and amplitude scales independently. See Figure 5 on page 25.

Note

For HDTDR plots for short cables such as patch cords, the tester does not change the magnification for the distance (horizontal) scale.

The HDTDX Analyzer

While NEXT test results shows crosstalk signals relative to frequency, the HDTDX™ (High-Definition Time Domain Crosstalk) analyzer shows crosstalk signals relative to their distance from the tester. The HDTDX plot shows the locations and amplitudes of crosstalk signals to help you find the causes of NEXT and ACR-F failures.

After an Autotest, you can see HDTDX plot if the Autotest had a **FAIL**, **FAIL*** or **PASS*** result, or if **HDTDX/HDTDR** on the **TEST SETUP** screen was set to **All Autotests** when you did the test.

To see the HDTDX plot for an Autotest, tap the **DIAGNOSTIC** tab or the **FAULT INFO** tab on the Autotest results screen, then tap **HDTDX ANALYZER**. Figure 89 shows an example of an HDTDX plot. Figure 90 shows how some common faults appear on HDTDX plots.

To get HDTDX analyzer results you can also tap **Tools** > **Diagnostics**, but you cannot save these results.

Note

*If **Store Plot Data** is off, the tester does not include the HDTDX plot with results you save.*

To zoom in and out, use the pinch, reverse-pinch, and double-tap gestures on the touchscreen. You can also use the zoom controls to change the magnification on the distance and amplitude scales independently. See Figure 5 on page 25.

Note

For HDTDX plots for short cables such as patch cords, the tester does not change the magnification for the distance (horizontal) scale.

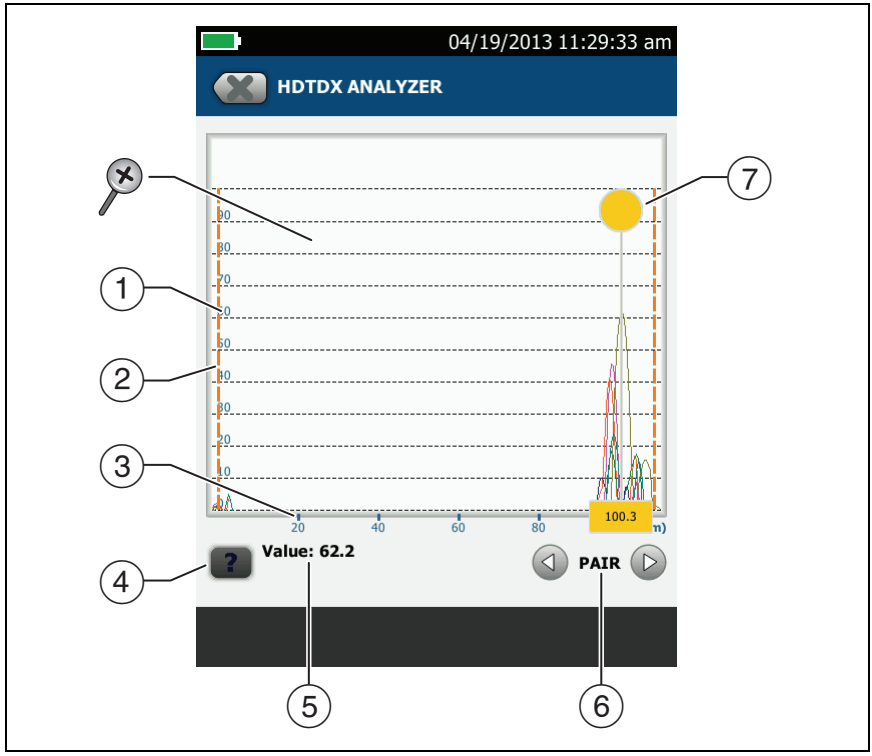

GPU114.EPS

Figure 89. HDTDX Plot

① The vertical scale shows the amplitudes of the crosstalk signals. The numbers on the scale are for reference only and do not have units. The values on the scale are related to the limits for NEXT in the selected test limit. For example, a crosstalk signal that goes to 20 on the scale when you use a Cat 5 limit goes to over 40 when you use a Cat 6 limit.

② The orange, dashed lines are at the start and end of the cabling that the tester includes in the test results.

③ The horizontal scale shows the distance along the cabling.

④ Tap ? to see help for this screen.

⑤ The **Value** is the value of the crosstalk at the cursor's position. If the plot shows all cable pairs, the value shown is the largest of all the pairs.

The tester adjusts the values of crosstalk for insertion loss so that the plot shows the values as they are at the sources of the crosstalk.

⑥ To see the plots for individual pairs, tap ◁ or ▷. To select pairs to show on the plot, touch ◁ or ▷ for one second to see the **SELECT PAIRS** window. Select the pairs you want to see, then tap **OK**.

⑦ The measurement cursor. The box at the bottom of the cursor shows the distance from the start of the cabling to the cursor.

To measure distance, tap the yellow circle so that **MARK** shows, drag the cursor to the start of the measurement, tap **MARK**, then drag the cursor to the end of the measurement. See "How to Use the Measurement Cursor on the HDTDR and HDTDX Plot" on page 208.

Refer to Figure 90:

① Cat 5e test on a Cat 5 cable.

② Approximately 7 m of bad cable near the remote.

③ Poor-quality terminations. A typical cause is excessive untwisting of the wire pairs.

④ Split pair on 3,6-4,5. The split pair is in a patch cord approximately 19.5 m from the main tester.

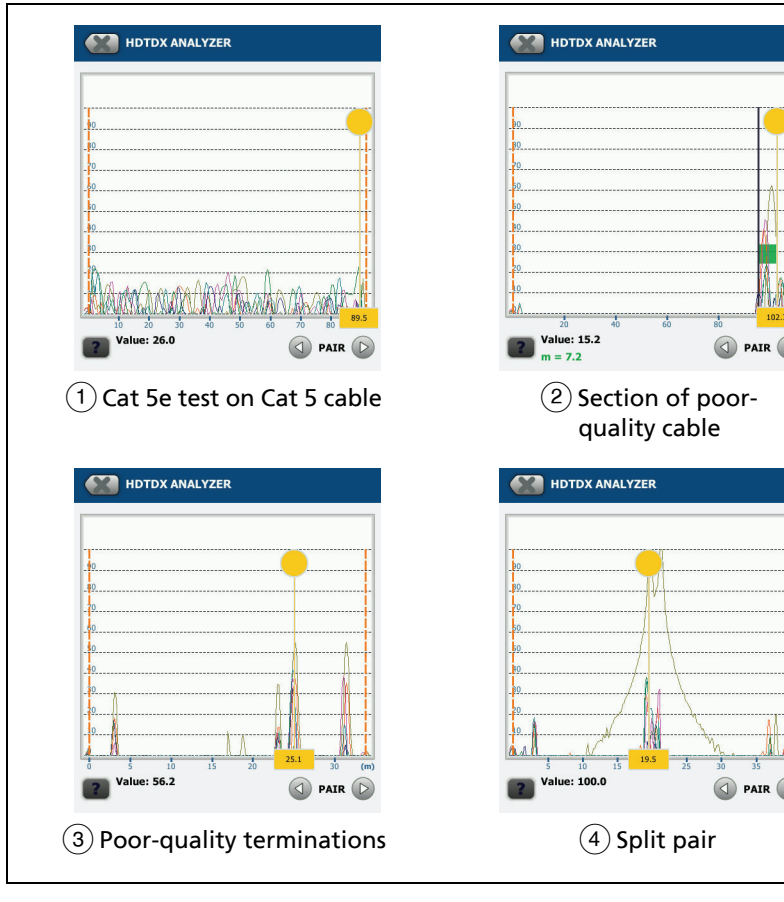

① Cat 5e test on Cat 5 cable

② Section of poor-quality cable

③ Poor-quality terminations

④ Split pair

GPU99.EPS

Figure 90. Typical Faults Shown on HDTDX Plots

How to Use the Measurement Cursor on the HDTDR and HDTDX Plot

You can use the cursor on the HDTDR and HDTDX plots to measure the distance to a source of high return loss or crosstalk from any point on the plot. You can also measure the length of a segment or patch cord that causes high return loss or crosstalk.

To use the measurement cursor to measure distance

Refer to Figure 91.

1. Tap the yellow circle at the top of the cursor ((2)) so that **MARK** shows.
2. While **MARK** shows, use one of these methods to move the cursor to the point where you want to start the measurement:
   - Drag the cursor with the yellow circle ((2)).
   - Tap or press and hold  or  ((3)).
3. Tap **MARK**, then while **UNMARK** shows, move the cursor to the point where you want to end the measurement.

   Note

   *If **UNMARK** and the cursor controls do not show, tap the yellow circle.*

   The distance between the cursor and the mark shows below the plot ((7)).
4. To make a new measurement, tap the yellow circle, tap **UNMARK** ((10)), then do steps 1, 2, and 3 again.

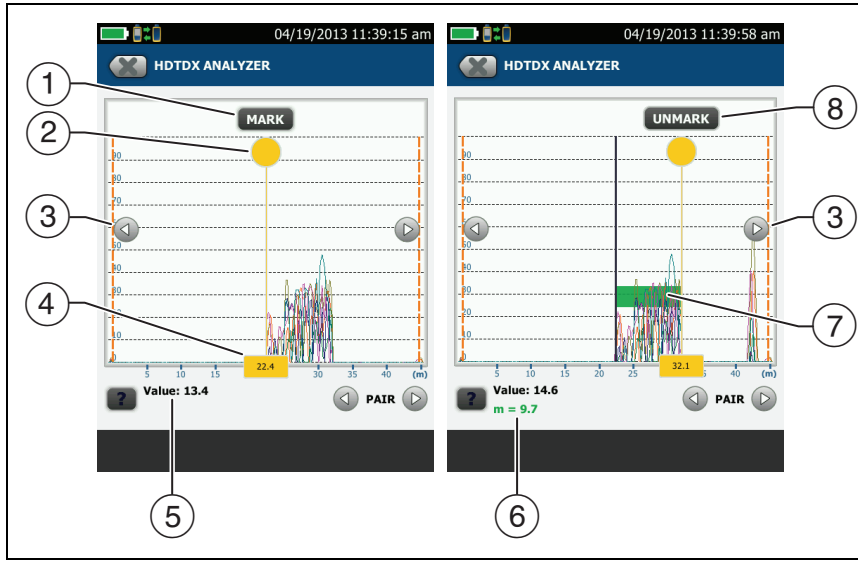

GPU113.EPS

Figure 91. How to Use the Measurement Cursor on the HDTDR or HDTDX Plot

① To specify the start of a measurement, tap the yellow circle (②), then tap **MARK**.

② To see the **MARK** and **UNMARK** buttons, tap the yellow circle. When **MARK** or **UNMARK** shows, you can drag the cursor.

③ To move the cursor in small increments, tap or press and hold ◁ or ▷. If these buttons do not show, tap the yellow circle on the cursor.

④ The measurement in the box is the distance from the start of the cabling to the cursor.

⑤ The measured value of crosstalk or return loss at the cursor's location.

⑥ The distance between the start and end of the green measurement bar.

⑦ The green measurement bar goes from the start point to the end point of your measurement.

⑧ To start another measurement, tap **UNMARK**. If **UNMARK** does not show, tap the yellow circle (②).

Chapter 7: Clean Fiber Endfaces

Always Clean Endfaces Before Tests

When a fiber optic link does not operate correctly, the cause is frequently a dirty endface in a connector. Figure 92 shows examples of dirty endfaces and an endface that has been correctly cleaned and polished.

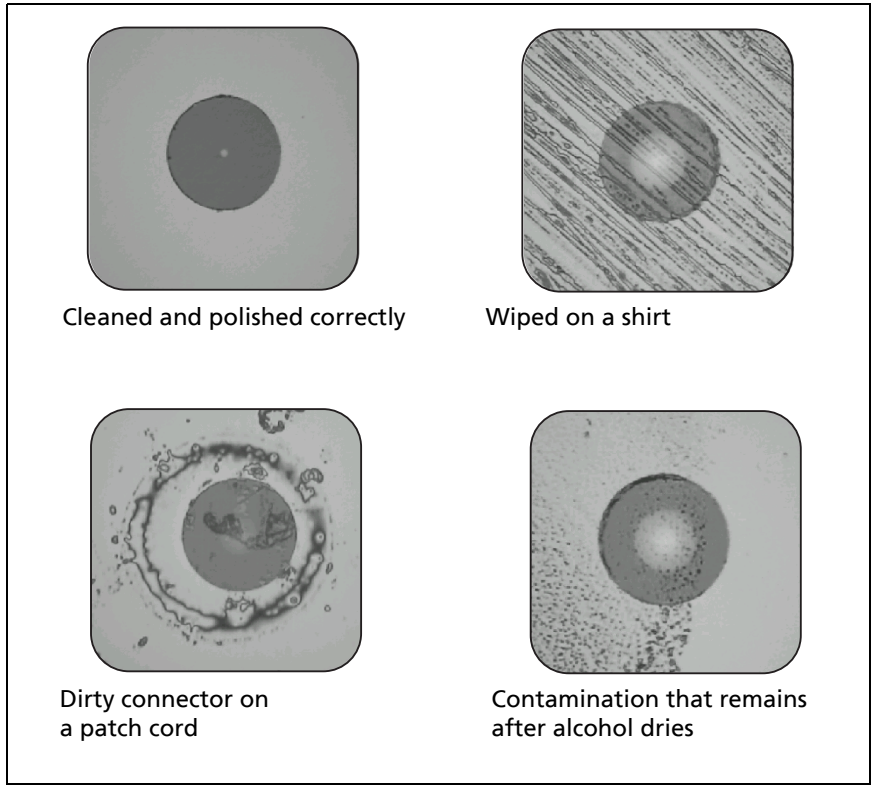

Figure 92. Examples of Clean and Dirty Fiber Endfaces

Always clean and inspect the endfaces in fiber connectors before you make connections. Fluke Networks recommends that you use a mechanical device, such as the Fluke Networks Quick Clean Cleaner, to clean connectors on network equipment. If you do not have such a device, if the device does not clean the connector sufficiently, or when you clean connectors on test reference cords, use other optical-grade supplies such as wipes and solvent.

Figure 93 shows the equipment you use to clean and inspect fiber endfaces.

⚠⚠Warning

To prevent possible eye damage caused by hazardous radiation:

- **Do not look directly into optical connectors. Some optical equipment emits invisible radiation that can cause permanent damage your eyes.**
- **Before you clean an endface, turn off any optical sources (laser or LED) that are connected to the fiber.**
- **When you inspect endfaces, use only magnification devices that have the correct filters.**

⚠Caution

To prevent damage to connectors and to keep contamination off of endfaces:

- **Always cover unused connectors and adapters with protective caps.**
- **Always keep unused protective caps in a clean, sealed container to prevent contamination.**

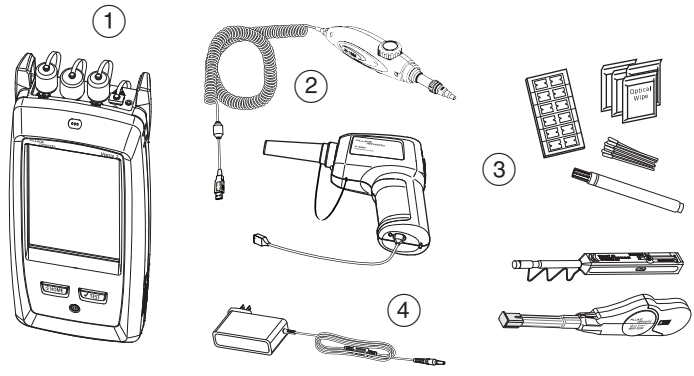

1. Main tester with CertiFiber Pro, OptiFiber Pro, or blank module installed
2. FI-1000 or FI-3000 video probe with USB connector
3. Fiber cleaning supplies
4. AC adapter (optional)

Figure 93. Equipment to Clean and Inspect Fiber Endfaces

How to Use a Fluke Networks Quick Clean Cleaner

⚠Caution

To prevent damage to the device and to connectors and to keep contamination off of endfaces, read all instructions and obey all safety precautions given in the instructions for the device you use to clean connectors.

To clean the connectors on test reference cords, use wipes, swabs, and solvent. The Quick Clean cleaner cleans the fiber core, but can leave contamination around the core. The contamination can move to the core when you make connections. See "To Clean Connector Ends" on page 219.

Note

You can use the Quick Clean cleaners to clean APC endfaces.

1. Use the video probe to inspect the connector. If it is dirty, continue to step 2.
2. To clean a bulkhead connector, remove the cap. To clean the connector on a fiber cable, remove only the tip of the cap.
3. If necessary for a bulkhead connector, extend the tip of the device.
4. Push the device straight into the connector until you hear a loud click. See Figures 94 and 95. Then remove the device.

Note

Pushing the cleaner into a connector multiple times can cause static to build up on the fiber endface. The static can cause dust to stick to the endface. If this occurs, put a dot of solvent on the cleaner's cloth, then clean the connector again.

5 Use the video probe to inspect the connector. If necessary, clean and inspect the connector again.

If the cleaner does not clean the connector sufficiently:

- Put a dot of solvent on the cleaner's cloth, then clean the connector again.
- Use a swab and solvent to clean the connector.

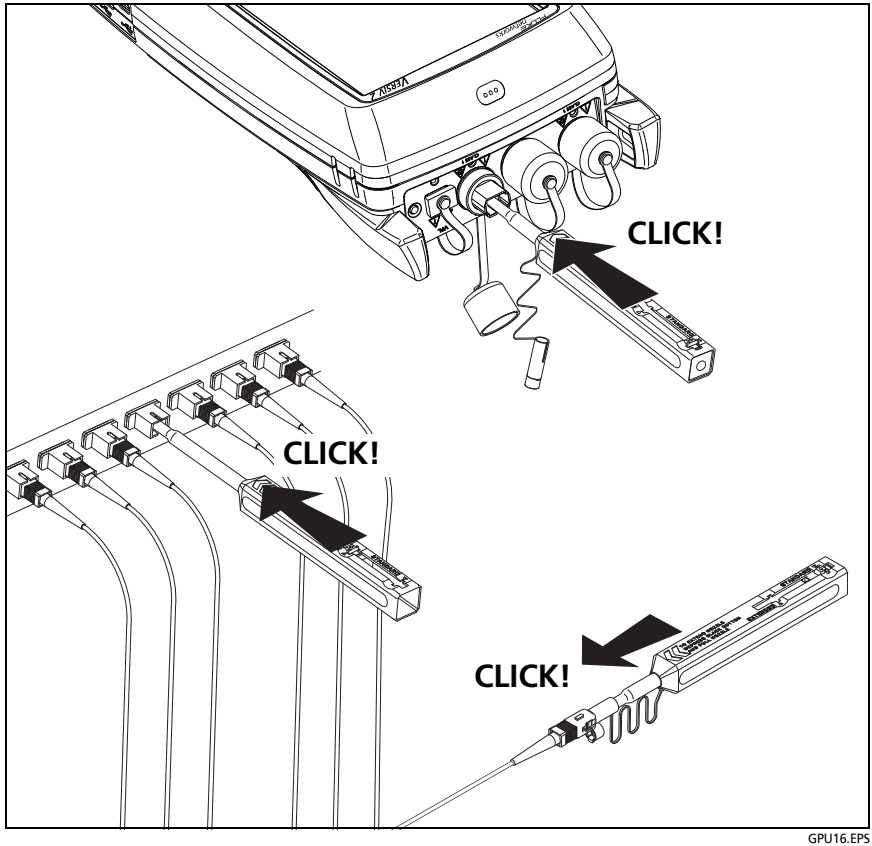

Figure 94. How to Use the Single-Fiber Quick Clean Cleaner

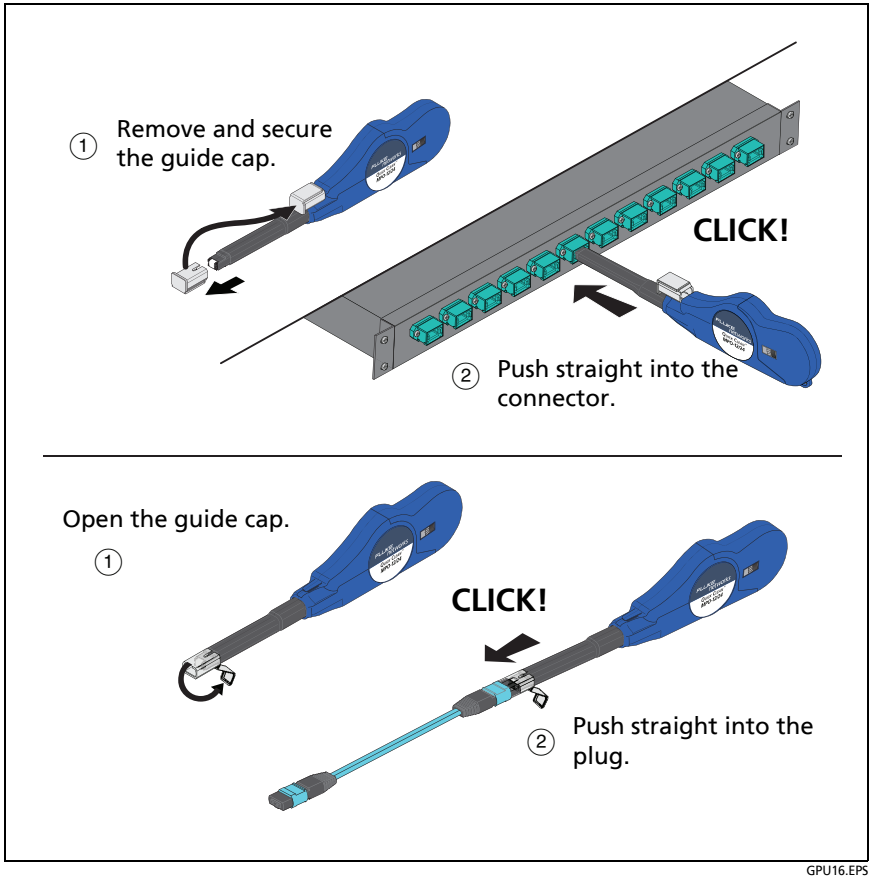

GPU16.EPS

Figure 95. How to Use the MPO Quick Clean Cleaner

How to Use Wipes, Swabs, and Solvent

⚠Caution

To prevent damage to connectors and to keep contamination off of endfaces:

- **Always discard wipes or swabs after you use them.**
- **Do not let solvent dry on an endface. Some solvents leave a residue after they dry.**
- **If you must use alcohol as a solvent, make sure you use 99%-pure, anhydrous alcohol.**
- **Put wipes on a soft surface, such as a stack of wipes, that will conform to the shape of the fiber endface.**
- **When you rub fiber endfaces against a dry cleaning pad, always use short strokes (~1 cm or ~0.4 in). Long strokes against a dry pad can cause a build-up of static charge that can attract dust to the endface.**

To Clean Bulkhead Connectors

1. Use a video probe to inspect the connector. If it is dirty, continue to step 2.
2. Touch the tip of a fiber optic solvent pen or swab soaked in solvent to a lint-free dry wipe or fiber cleaning card.
3. Touch a new, dry swab to the solvent spot on the wipe or card. Push the swab into the connector, twist it around 3 to 5 times against the endface, then remove and dispose of the swab.
4. Dry the connector with a dry swab by twisting it around in the connector 3 to 5 times.
5. Use a video probe to inspect the connector. If necessary, clean and inspect the connector again.

To Clean the Optical Connectors on the Modules

To clean the optical connectors on the modules, first use the procedure given under “To Clean Bulkhead Connectors”.

If a connector is very dirty or the procedure above does not make it clean, use this procedure:

1. Unscrew the adapter on the connector.
2. Clean the ferrule or photodiode lens with a dry, optical-grade wipe made for fiber optic connectors.
3. Use a video probe to inspect the connector. If necessary, clean and inspect the connector again.
4. If the connector stays dirty, use a wipe that is moist with optical-grade solvent to clean the endface. Dry the ferrule with a dry wipe.

Note

*If the OTDR **Port Connection Quality** gauge for the OptiFiber Pro module stays in the **Poor** range after you clean the OTDR connector, remove the adapter from the module and inspect the adapter for damage. Make sure that the white plastic ring inside the center tube shows no damage.*

To Clean Fiber Adapters

At regular intervals, clean fiber adapters with a swab and fiber optic solvent. Dry with a dry swab.

To Clean Connector Ends

1. Use a video probe to inspect the connector. If it is dirty, continue to step 2.
2. Touch the tip of a fiber optic solvent pen or swab soaked in solvent to a lint-free dry wipe or fiber cleaning card.
3. Rub the connector endface across the solvent spot, then back and forth once across the dry area of the wipe or card. Typically, one or two short strokes (~1 cm or ~0.4 in) are sufficient to dry the endface.
4. Use a video probe to inspect the connector. If necessary, clean and inspect the connector again.

Notes

For APC connectors, hold ferrule against the cleaning area at the same angle (typically 8°) as the ferrule endface.

For some connector types, such as VF-45, it is necessary to use a different method to clean the endface.

Chapter 8: FiberInspector™ Pro Tests

The optional FI-1000 FiberInspector video probe (the Probe) is a hand-held video probe used with a Versiv Series Tester (the tester) to let you inspect the endfaces in single fiber optic connectors.

The optional FI-3000 and FI-3000-NW FiberInspector Pro video probes (the Probe) are hand-held video probes used with a Versiv Series Tester (the tester) to inspect fiber optic endfaces on MPO or single fiber connectors. The FI-3000 can be used with the FI-IN™ app (the App) on a mobile device. The FI-3000-NW probe cannot be used with WiFi or the App.

The Probe lets you see dirt, scratches, and other defects that can cause unsatisfactory performance or failures in fiber optic networks.

Use the Probe with a direct USB connection to a Versiv Series Tester to view and analyze endfaces and save and share test results. To perform these functions wirelessly, use the FI-3000 with the FI-IN app on a mobile device.

The FI-1000 probe is included with the FI-7000 kit. The FI-3000 probe is included with the FI2-7300 kit. The FI-3000-NW probe is included with the FI2-7300-NW kit. The FI-1000 is an optional accessory for the CertiFiber Pro and OptiFiber Pro Testers.

This manual explains how to use the Probe with Versiv Series Testers. To use the Probe with the FI-IN app, see the *FI-3000 Users Manual* at **www.flukenetworks.com/support/manuals**.

Features of the FI-1000

Figure 96 shows the features of the FI-1000.

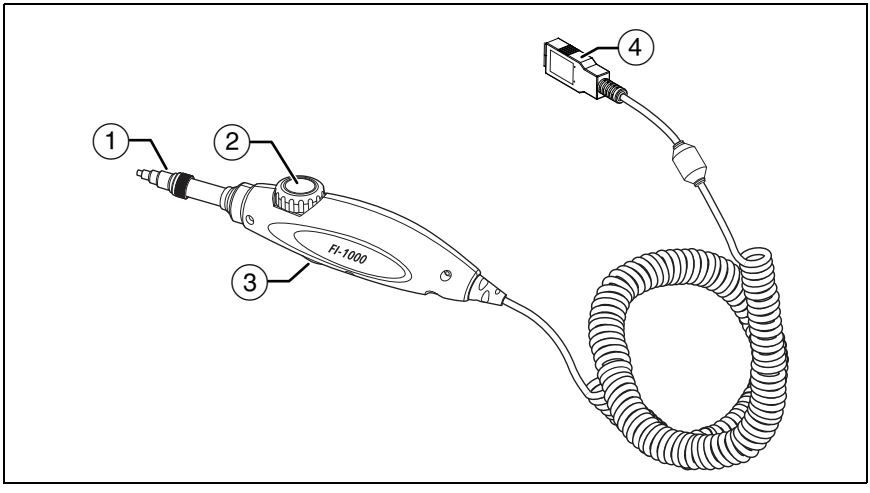

Figure 96. Features of the FI-1000

① Removable tip for different types of connectors.

② Focus adjustment dial.

③ Function button:

- Push to turn on the Probe.
- With the Probe on, push to toggle between still and live modes.
- Push and hold to turn off the Probe.

④ Cord to connect the Probe to the USB A port on the Tester.

Features of the FI-3000

Figure 97 shows the features of the FI-3000.

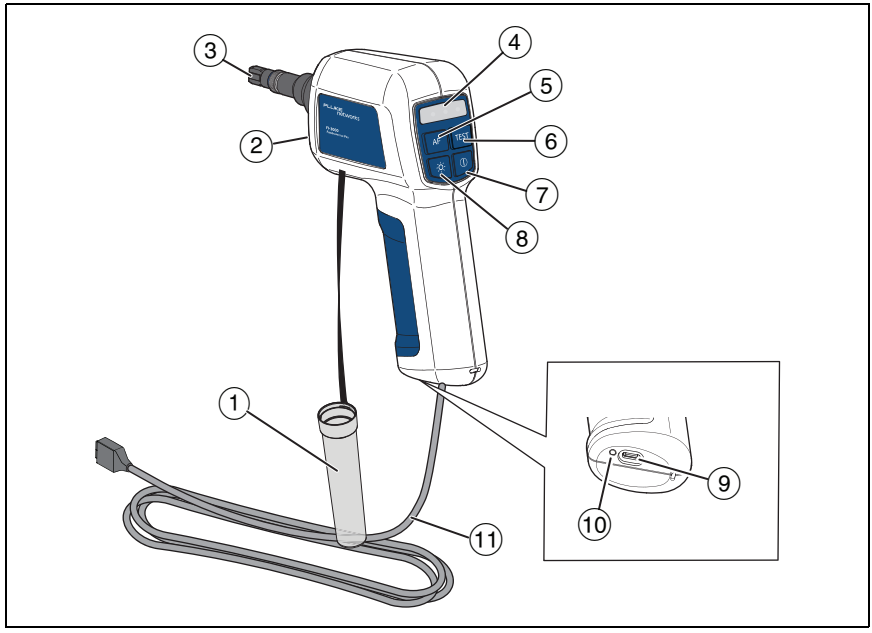

Figure 97. Features of the FI-3000

① Dust cap.

② PortBright™ LED.

③ Removable tip for different types of connectors.

④ Status LEDs:

Blue	**Two short blinks periodically**: The Probe is on but not connected to a tester. **One short blink periodically**: The Probe is connected to the mobile device, but the app is not active. **Solid**: The Probe is connected to a tester and the tester is on.
Red	The test failed.
Green	The test passed.
Red and Green	The test limit is **Document Only**, so the result does not have a **Pass** or **Fail** status.

⑤ AF (**Auto Focus**): With a live image on the display, push to automatically focus the image.

⑥ TEST (**Test**): Push to analyze an endface image. Push again to return to the **Live View** screen.

⑦ ⏻: Push for 2 seconds to turn on or off the Probe.

⑧ ☼: Push to turn on or off the PortBright LED.

⑨ USB type C port.

Use with the USB cord to connect the Probe to the tester.

Use with the USB cord or an approved AC adapter to charge the Probe. Use an AC adapter to charge the battery faster than with the USB cord connected to a PC or laptop.

⑩ Battery status LED.

⑪ USB cord (USB type A to USB type C).

Charge the FI-3000 Battery

Before you use the Probe for the first time, charge the battery for ≥2 hours with the tester turned off. See Figure 98. The battery charges in ≤5 hours. A fully-charged battery operates for ≥10 hours of typical use.

Note

You do not need to fully discharge the battery before you recharge it.

The battery will not charge if its temperature is outside the range of 32 °F to 113 °F (0 °C to 45 °C) or if it has a fault and must be replaced.

With the Probe connected to an AC adapter and the Probe on, the Probe charges slower than with the Probe off.

When you send an image to the tester, the battery uses more power than what the AC adapter supplies to charge the battery.

The battery status LED shows red while the battery charges. The LED shows green to indicate the battery is fully-charged. The LED alternates between red and green to indicate that the battery will not charge.

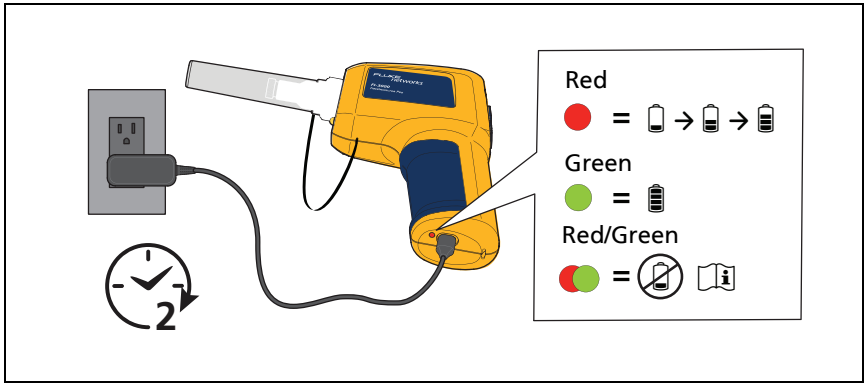

Figure 98. Charge the Battery

Probe and Tip Selection

Select the appropriate Probe, tip, connector, and adapter.

To do a single fiber inspection, use:

- The FI-3000 probe with the single fiber adapter and the appropriate single fiber tip.
- The FI-1000 probe with the appropriate single fiber tip.

To do an MPO inspection, use:

- The FI-3000 probe with the appropriate MPO tip and, if necessary, the appropriate MPO aligned or opposed key adapter.
- The FI-1000 probe with the MPO/MTP® adapter and MPO/APC adapter. The MPO/APC adapter does not have an MPO key.

Note

Features and instructions that refer to the key position of a tip do not apply to the FI-1000 probe and only apply to MPO tests with the FI-3000 probe.

FI-1000 Probe Setup

Attach the appropriate tip or adapter to the Probe. See Figure 99 and Figure 100.

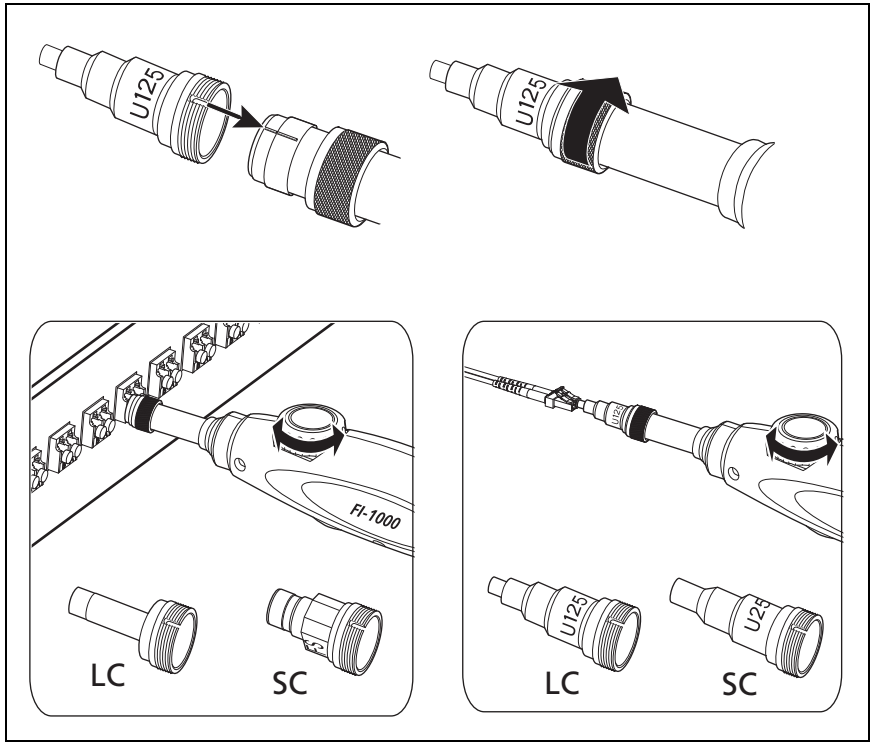

Figure 99. Single Fiber Tips

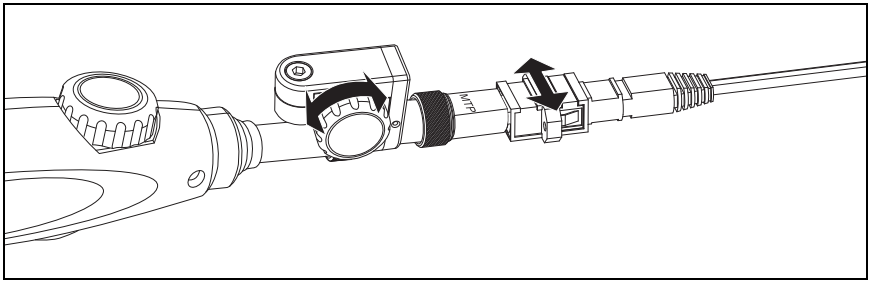

Figure 100. MPO/MTP® Inspection Tip

FI-3000 Probe Setup

Attach the appropriate tip to the Probe.

To attach the single fiber adapter and single fiber tip to the Probe:

1. Align the slot in the single fiber adapter with the alignment pin on the end of the Probe. See Figure 101.
2. Turn the silver ring on the Probe to secure the adapter to the Probe.
3. Align the slot in the single fiber tip with the alignment pin on the adapter.
4. Turn the ring on the adapter to secure the tip to the adapter.

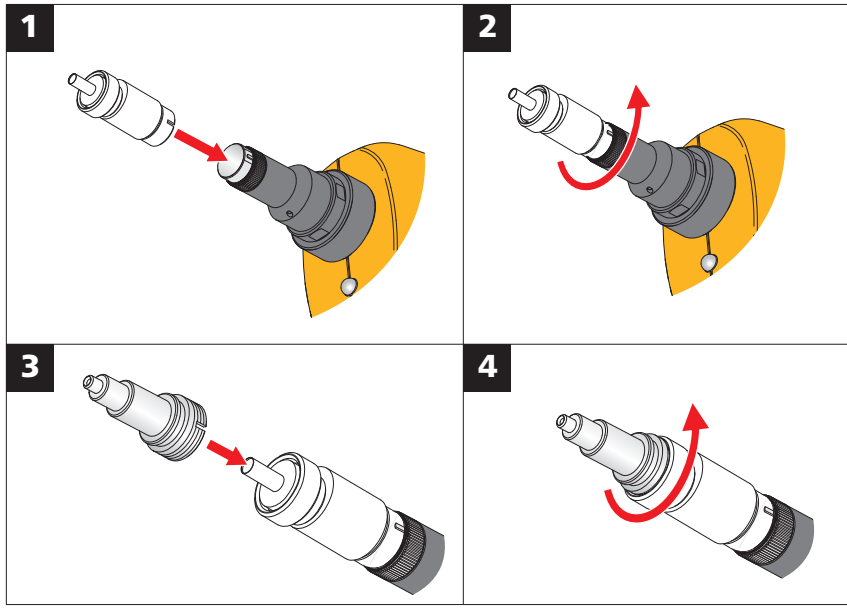

Figure 101. Single Fiber Tip Attachment

MPO Tip Attachment

Attach the tip to the Probe with the key in the desired position. To learn more about key position, see “MPO Key Position”.

To attach a tip:

1 Align the slot in the tip with the alignment pin on the end of the Probe. See Figure 102.

2 Turn the silver ring on the Probe to secure the tip to the Probe.

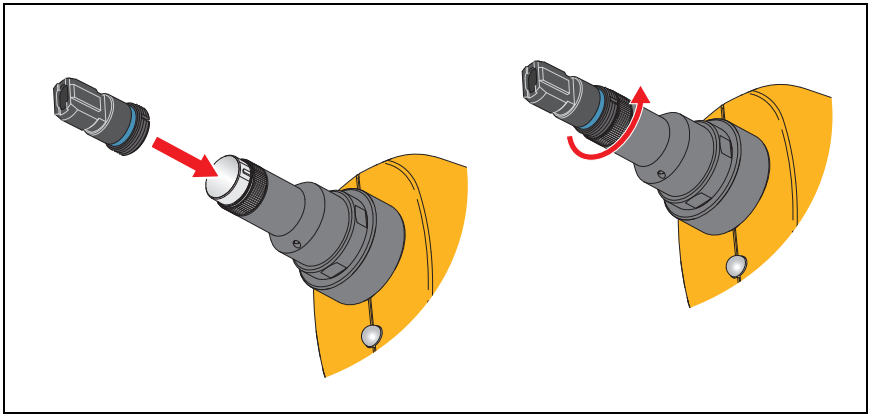

Figure 102. MPO Tip Attachment

MPO Key Position

The tip has an MPO key that you can put on either the left or right side of the Probe. This lets you rotate the Probe when a cabinet door or other object prevents movement of the Probe. See Figure 103.

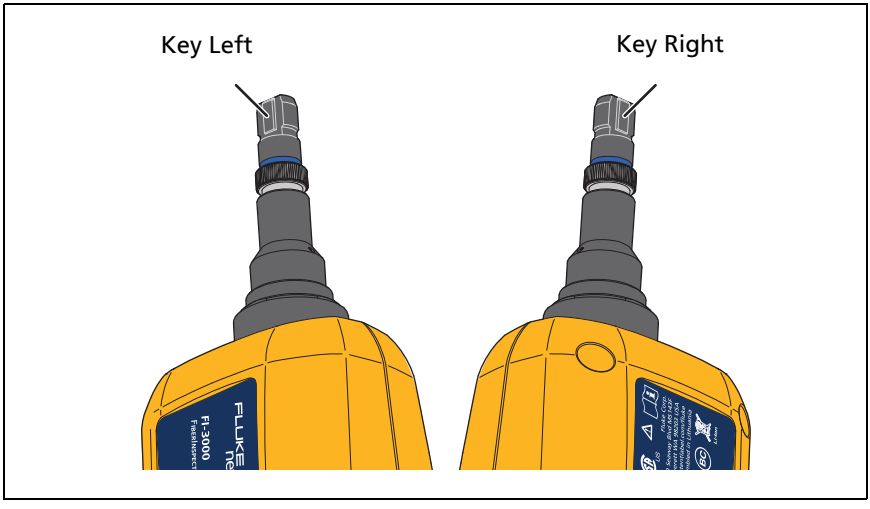

Figure 103. Key Position of the Tip

Set the **Key Position** on the tester to make the fiber numbers on the image of the endface on the display agree with the fiber locations of the connector. This is called fiber number agreement. See "Set up a FiberInspector Test".

The key position on an adapter affects the location of the fiber numbers on image of the test result.

With an adapter attached to the tip, to see the correct numbers for the fibers in the test results:

- For an opposed key adapter, set the **Key Position** to the key position on the Probe.
- For an aligned key adapter, set the **Key Position** to the opposite side from the key position used on the Probe.

With **Key Position** set correctly for the type of adapter, fiber number 1 shows on the top left of the image on the display.

Note

If you rotate the adapter or tip on the probe, change the key position to **Key Left** *or* **Key Right***, as appropriate to maintain fiber number agreement.*

Figure 104 shows the key on the left side of the Probe and the **Key Position** set to **Key Left** on the tester to test connectors in a patch panel with opposed key adapters.

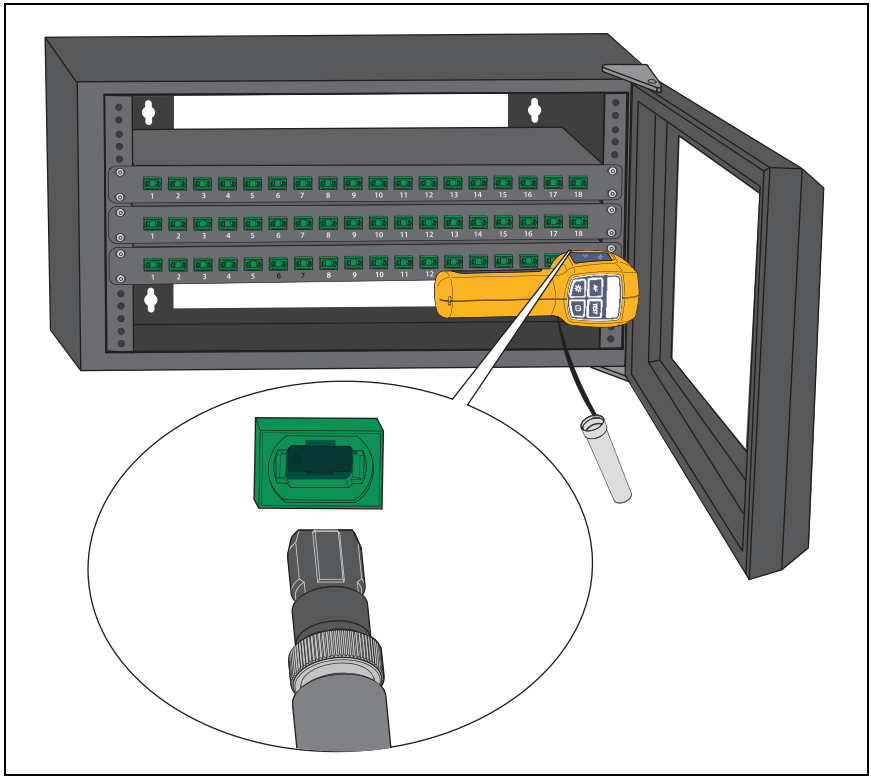

Figure 104. Key Left Position with Opposed Key Adapter

Features of the Tester

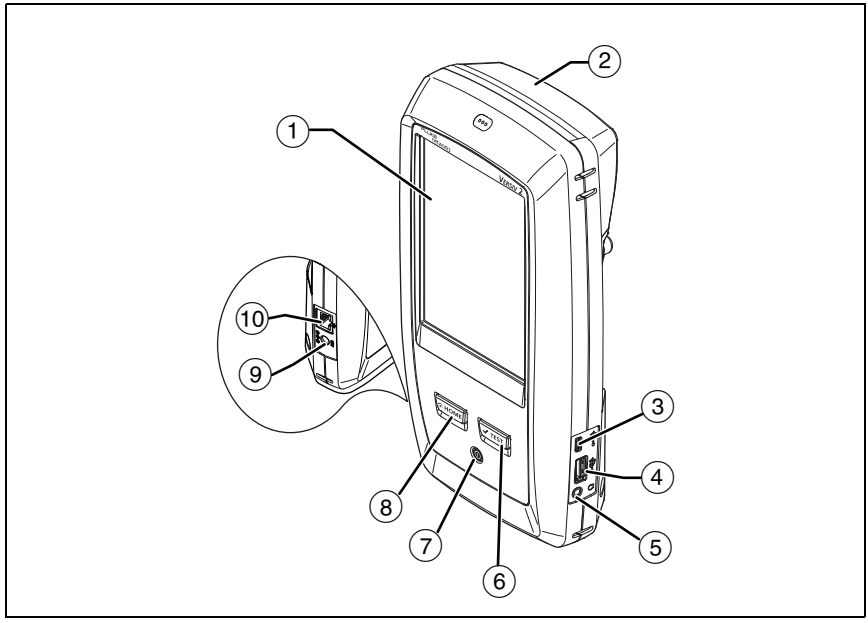

Figure 105. Tester Features (Versiv 2 shown)

① LCD display with touchscreen.

② Blank module included with the FI2-7300 or FI2-7300-NW kit. Keep the module installed to give protection to the module connectors.

③ Micro USB port: This USB port lets you connect the tester to a PC so you can upload test results to the PC and install software updates in the tester.

④ USB type A port: This USB host port lets you connect the Probe to the tester and save test results on a USB flash drive. On a Versiv main tester, this port lets you connect a Wi-Fi adapter for access to Fluke Networks cloud services. (Versiv 2 testers have an internal Wi-Fi radio.)

⑤ Headset jack.

⑥ TEST: Starts a test. To start a test, you can also tap **TEST** on the display.

⑦ Power button. Versiv 2: The LED in the power button shows the status of the battery charging process. See Table 2 on page 19.

⑧ HOME: Press HOME to go to the home screen.

⑨ Connector for the AC adapter. Versiv: The LED is red when the battery charges, and green when the battery is fully charged. The LED is yellow if the battery will not charge. See "Charge the Battery" on page 18.

⑩ RJ45 connector: Lets you connect to a network for access to Fluke Networks cloud services.

Home Screen for FiberInspector Pro Tests

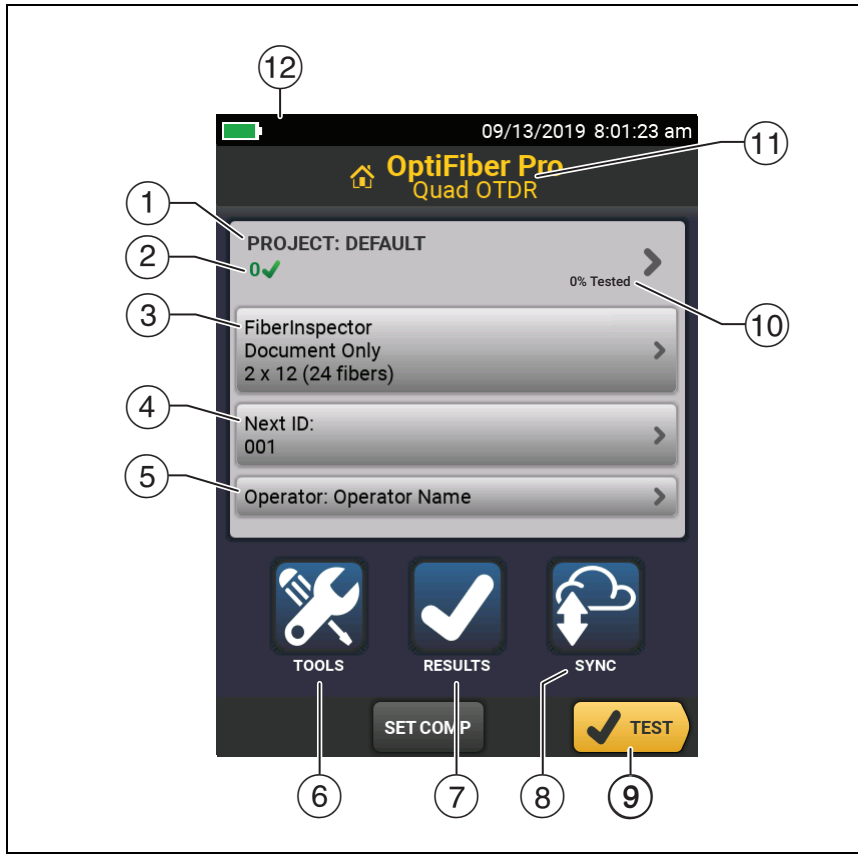

Figure 106. Home Screen for FiberInspector Pro Tests

① **PROJECT**: The project contains the settings for a job and helps you monitor the status of a job. When you save test results, the tester puts them in the project. Tap the **PROJECT** panel to edit the project settings, select a different project, or make a new project.

② With **TEST LIMIT** not set to **DOCUMENT ONLY**, shows a summary of the test results in the project:

: The number of tests that passed.

: The number of tests that failed.

③ The test setup panel shows the settings the tester uses when you tap **TEST** or push TEST.

To change these settings, tap the panel.

Note

You can set up tests for any module that the tester can use, even with no module installed.

④ **Next ID**: The **Next ID** panel shows the ID that the tester gives to the next test results you save.

Tap **Next ID** to do these tasks:

- Enter an ID, select a different ID in the ID set, select a different set of IDs, or make a new set. The tester adds the IDs and ID sets you make to the project that shows on the home screen.
- Turn on or off **Auto Save**.
- For OTDR or FiberInspector tests:

  Select **End 1** or **End 2**.

  Enter a name for **End 1** and **End 2**.

⑤ **Operator**: The name of the person who does the job. You can enter a maximum of 20 operator names. For each operator you can also enter the email address that the operator will use as an ID to sign in to LinkWare Live.

⑥ **TOOLS**: The **TOOLS** menu lets you set up the compensation function for the launch/tail cords, use tools such as the real-time trace and the FiberInspector test, see the status of the tester, and set user preferences such as the language and the display brightness.

Note

The installed module determines which functions show in the **TOOLS** *menu.*

⑦ **RESULTS**: Tap **RESULTS** to see and manage the results that are saved in the tester.

⑧ **SYNC**: Tap **SYNC** to upload results to LinkWare Live. See Chapter 18.

⑨ **TEST**: Tap **TEST** to do the test shown in the test setup panel.

⑩ The percentage of the tests in the project that are completed. The tester uses the number of available IDs and the tests you selected on the **CABLE ID SETUP** screen to calculate this percentage. See Figure 208 on page 554. **% Tested** does not show if your project contains only a **Next ID** list. See "To Make ID Sets with International Characters" on page 581 for more information about the **Next ID** list.

⑪ The type of module attached to the tester. For the blank module that comes with the FI2-7300 or FI2-7300-NW kit, **HOME** shows.

⑫  The asset management icon shows when the owner of a LinkWare Live account enables the asset management service for the tester. See "Sign Your Tester Out of LinkWare Live".

Set up a FiberInspector Test

To set up a FiberInspector test on the tester:

1. On the home screen, tap the test setup panel.

   The **CHANGE TEST** screen shows on the display.

2. To set up a new FiberInspector test, tap **NEW TEST**.

   Or

   Select a FiberInspector test, then tap **EDIT**.

   The **TEST SETUP** screen shows.

3. If necessary, tap **Module**.

4. Tap **FiberInspector Pro.**

5. Tap the panels to change settings for the test. See Table 10.

   Note

   To set up a project, which includes test settings, cable IDs, and an operator name, see Chapter 17.

6. Tap **SAVE**.

7. On the **CHANGE TEST** screen, if necessary, select the radio button next to the test and tap **USE SELECTED**.

Table 10. Settings for FI-3000 FiberInspector Pro Tests

Setting	Description
Module	If necessary, select **FiberInspector Pro**.
Test Type	Select **FiberInspector**.
Test Limit	**Document Only** is the default test limit and does not compare the results to standards or indicate pass or fail. Tap to select a limit based on a standard. Limits for the test are from standards such as IEC 61300-3-35. The limits specify the maximum size and number of scratches and defects allowed in the core or cladding zones on the endface of the fiber. When you select a limit for the test, the tester can compare the size, location, and number of scratches and defects to the criteria of the limit, and give each fault and the endface image a PASS or FAIL result. To see a different group of limits, tap **MORE**. Then, tap the name of a group. To make a custom limit, tap **Custom** in the **Limit Groups** list. See Chapter 19.

Table 10. Settings for FI-3000 FiberInspector Pro Tests (continued)

Setting	Description
End Type	Select the end type with the correct number of fibers. Then, tap **DONE**. The end types show white dots for active fibers and gray dots for unused fibers. *Note* *To do an MPO test with the FI-1000 probe, select the single fiber end type. The FI-1000 MPO tip can focus on a single fiber at a time.*
Key Position (FI-3000 MPO tests only)	Select the key position (**Key Left** or **Key Right**) to agree with the position of the tip on the Probe and adapter as appropriate. Then, tap **DONE**. See "MPO Key Position".
Auto Focus before Test (FI-3000 only)	To see this setting, do a FiberInspector test, then tap **SETTINGS** on the results screen. **On**: The probe focuses the image when you start a test. **Off**: You focus the image manually before you start a test. Use this setting if the probe cannot focus the image.

Do a FiberInspector Test

Note

Versiv testers do not support a wireless connection with the FI-3000 probe.

Use and store the tester with a module installed to protect the connector on the back of the tester.

To do the FiberInspector test:

1. Connect the FI-1000 probe to the type A USB port on the side of the tester.

   Or

   Connect the type C end of the USB cord to the FI-3000 and the type A end of the USB cord to the tester.
2. Install the appropriate tip on the Probe.
3. Turn on the Probe.
4. If necessary, turn on the tester.
5. Set up a FiberInspector test.
6. Clean the connector that you will inspect. See Chapter 7.
7. Insert the probe into a connector or patch cord adapter. See Figure 107.

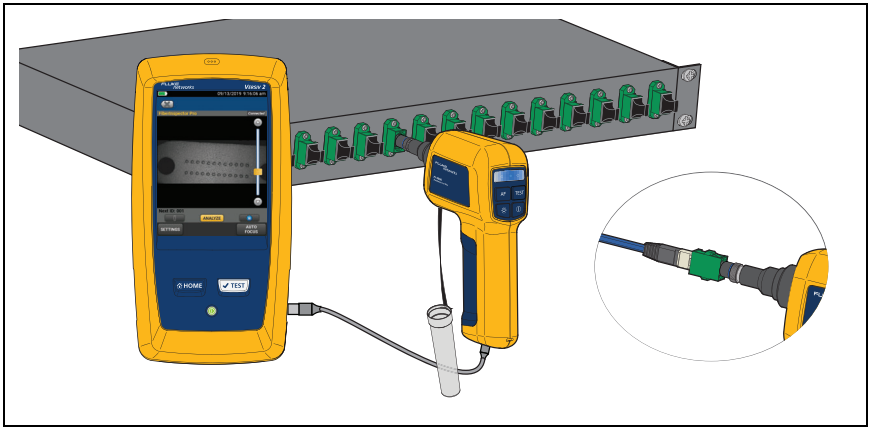

Figure 107. Inspect an Endface (FI-3000 shown)

8 Tap **TEST** on the tester to view a live image of the endface on the display.

9 For FI-1000 tests:

To adjust the focus, turn the dial on the probe clockwise or counterclockwise.

To adjust the brightness or contrast of the image, tap , then move the bars on the controls. To hide the controls, tap again.

To put the screen in still mode and turn off the probe, press the button on the probe or tap . To turn the probe on again, press the button on the probe or tap .

To zoom in and out, tap to put the screen in still mode, then use the pinch, reverse-pinch, and double-tap gestures on the touchscreen. See Figure 5 on page 25.

10 Tap **ANALYZE** to do an endface analysis.

An image of the connector with the test results shows on the display for you to view.

With **Test Limit** set to test to a standard and the results show **PASS** or with **Test Limit** set to **Document Only**, you can save the results.

With **Test Limit** set to test to a standard and the results show **FAIL**, you can schedule to fix the connection later or to test again.

11 To save the image, tap **SAVE**. To schedule to fix the connection later, tap **FIX LATER**.

The **SAVE RESULT** screen shows.

12 In the top right corner of the display, tap **End 1** or **End 2**.

13 Verify the **Cable ID** and End name are correct.

14 Tap **SAVE**.

Use the Probe When You Set a Reference

You can use the Probe to inspect connectors when you set the reference for loss/length tests.

If reference values are unacceptable, press the button on the probe to go to the FiberInspector screen. To go back to the reference screen, tap  .

View Endfaces

Note

With **Test Limit** *set to* **Document Only***, not all features are available.*

① If necessary, to see an image of the endfaces, tap on the image of the connector. See Figure 108.

To zoom in and out, use the pinch, reverse-pinch, and double-tap gestures on the display. See Figure 5 on page 25.

② Tap a fiber endface to see details about the defects on the endface.

The **IMAGE** tab shows the endface and any defects.

③ Tap the **DEFECTS** tab to see more details about the defects. See Figure 110.

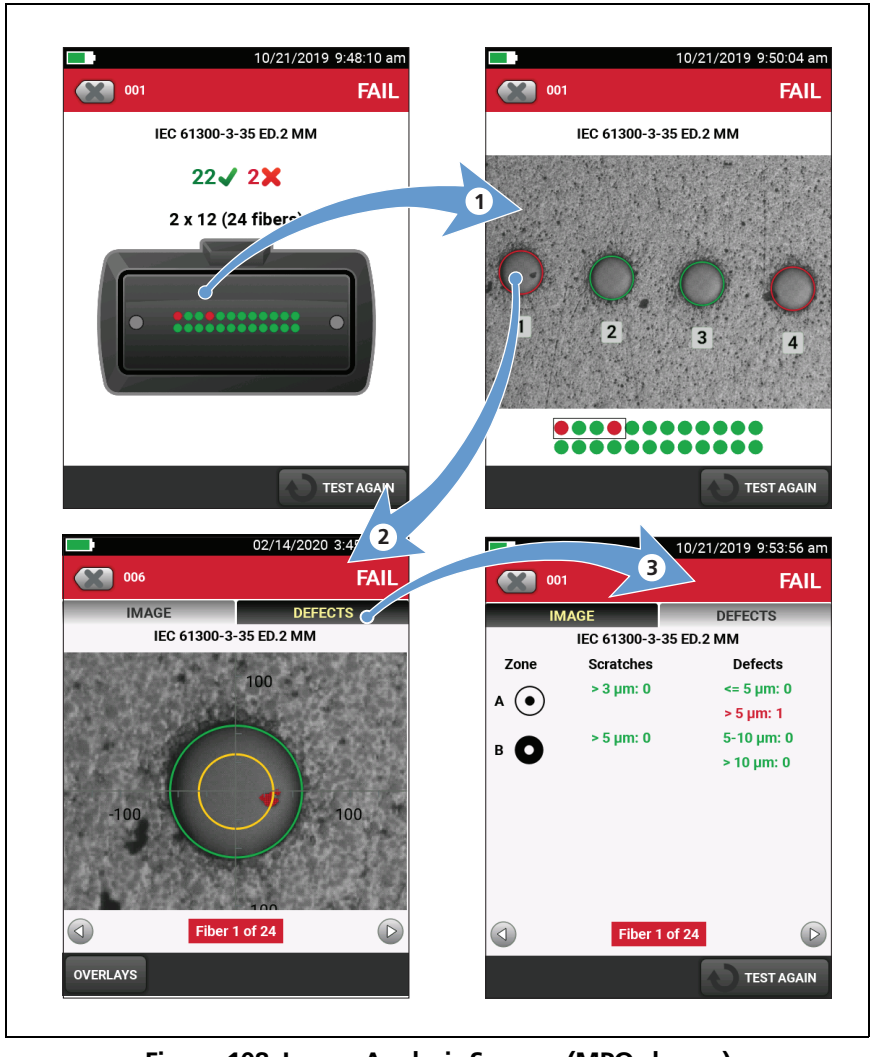

Figure 108. Image Analysis Screens (MPO shown)

Image Tab

On the **IMAGE** tab, you can use the round, horizontal, and vertical scales to measure the size of the fiber core and cladding. You can also measure the size of particles, scratches, and other defects on the endface.

Tap **OVERLAYS** to show or hide **Pass/Fail Highlights**, **Rings**, or **Scale**.

Pass/Fail Highlights: Adds highlights to defects:

- Red: **FAIL**. The scratch or defect is larger than the maximum size that the limit allows, is closer to the fiber core than the limit allows, or there are more scratches or defects than the limit allows.
- Green: **PASS**. The limit allows the scratch or defect because it is too small or too far from the core to cause problems, or there are fewer than the maximum allowed number of scratches or defects of that size.

⚠Caution

If a defect is possibly a dirt particle, clean the endface and do the inspection again. You must remove all loose particles because they can move into the core when you make connections.

Rings: On single fiber endfaces, the rings identify the core, cladding, adhesive, and contact zones. Figure 109 shows the zones on a single fiber endface. On MPO endfaces, the rings identify the core and cladding zones.

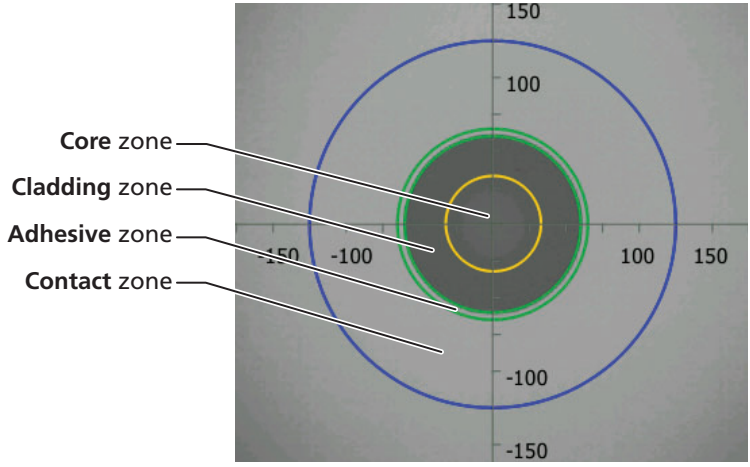

Figure 109. Zones on a Single Fiber Endface

- The **Core** zone is the optical fiber. This area typically has a diameter of 9 µm for single-mode fiber or 50 µm or 62.5 µm for multimode fiber.
- The **Cladding** zone is the area between the inner, green ring and the **Core** zone. The cladding is a layer of reflective material around the core that keeps the optical signal in the core.

- The **Adhesive** zone is the ring of epoxy or glue that attaches the cladding to the ferrule. This is the zone between the two green rings on the FiberInspector image. The middle of this area has a diameter of 125 µm, which is the diameter of the ferrule. Standards for endface analysis do not specify limits for scratches or defects in the adhesive zone, so defects and scratches in this area do not affect the **PASS/FAIL** result.
- The **Contact** zone is the area on the ferrule that touches the other fiber when you make a connection. The blue ring around the **Contact** zone has a diameter of 250 µm for all limits.

Note

If the sizes of the rings do not agree with the sizes of core or cladding, use the measurement axes to measure the core or cladding.

Defects Tab

The **DEFECTS** tab shows the number and size of the **Scratches** and **Defects** such as a particle of dirt, a chip, or a pit located in each zone.

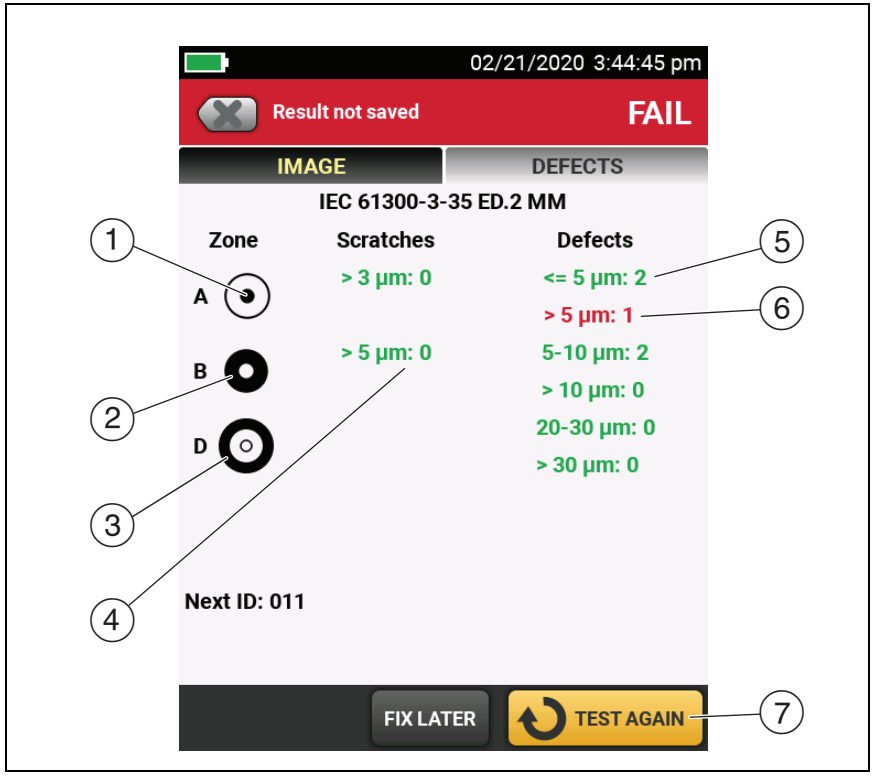

Figure 110. Defects Tab (Single Fiber shown)

① Zone A shows defects located in the core.

The measurement rings show after you tap **ANALYZE**. The sizes of the rings are specified by the limit. To specify different sizes, make a custom endface limit. See Chapter 19.

② Zone B shows defects located in the cladding.

③ Zone D shows defects located in the contact zone.

④ There are no scratches in the zones greater than the allowable size or number.

⑤ This defect is green because the limit allows for a greater number of defects of this size or smaller in this zone.

⑥ This defect is red because there are a greater number of defects of this size than the limit allows in this zone.

⑦ To do the analysis again, tap **TEST AGAIN**, then tap **ANALYZE**.

Fiber Tests with Two Main Testers

If you have two main testers, you can use Probes at both ends of the cabling for faster inspections of fiber endfaces.

You can also use the second main tester as a remote tester for loss/length tests with CertiFiber Pro modules.

To use a main tester as a remote:

Tap **TOOLS** then tap **Main as Remote**.

Chapter 9: Certify Fiber Cabling

⚠⚠⚠Warning

Before you use the tester, read the safety information that starts on page 5.

Overview of the CertiFiber Pro Optical Loss Test Set Modules

The Fluke Networks CertiFiber® Pro Optical Loss Test Set (OLTS) modules attach to Versiv™ and Versiv 2 main and remote testers to make rugged, hand-held testers that let you certify, troubleshoot, and document optical fiber cabling installations. The testers include these features:

- Measures optical power loss and length on dual-fiber, multimode cabling at 850 nm and 1300 nm (CFP-MM) or on dual-fiber single-mode cabling at 1310 nm and 1550 nm (CFP-SM). The four-wavelength module (CFP-QUAD) measures at 850 nm, 1300 nm, 1310 nm, and 1550 nm.
- Interchangeable connector adapters on input and output ports let you make reference and test connections that agree with ISO standards for most SFF (small form factor) connectors.
- Visual fault locator helps you find breaks, bad splices, and bends and verify fiber continuity and polarity.

CertiFiber Pro Connectors, Keys, and LEDs

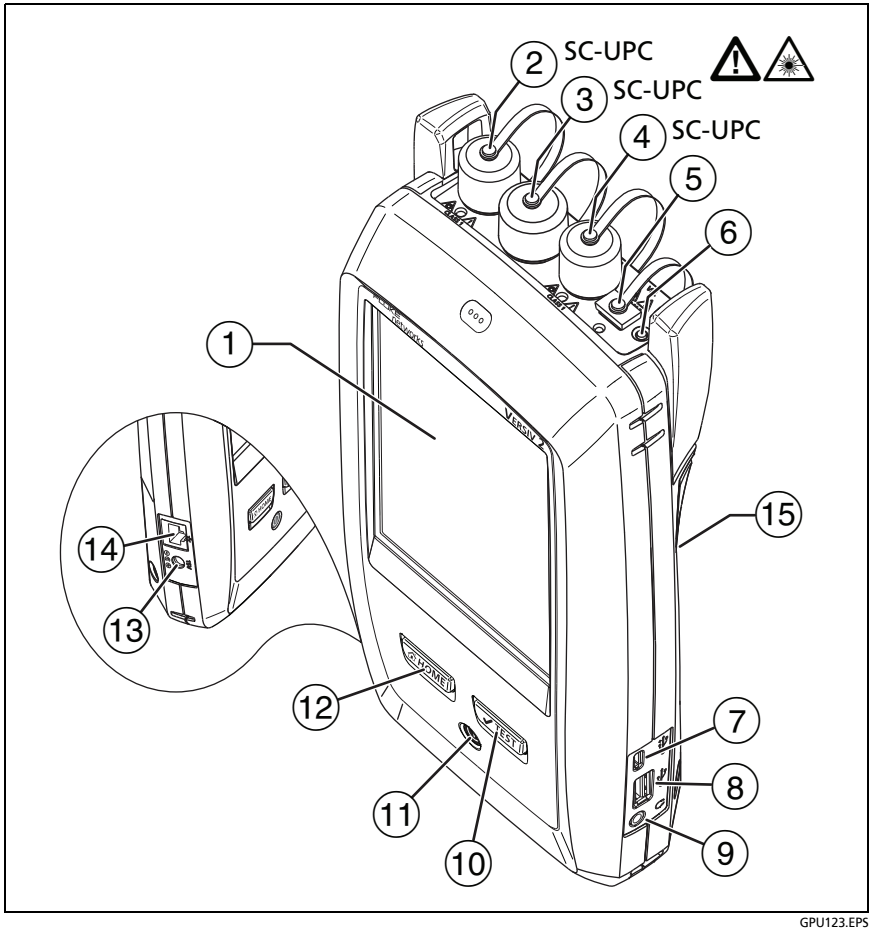

Figure 111. Main CertiFiber Pro Tester Connectors, Keys, and LEDs (Versiv 2 with CFP-QUAD module shown)

① LCD display with touchscreen

② single-mode output port with removable connector adapter and dust cap. This port transmits optical signals for loss and length measurements.

The LED below the output port is red when the port transmits 1310 nm and green for 1550 nm.

⚠Caution

Do not connect APC (angled physical contact) connectors to the output ports. An APC connector can damage the UPC fiber endface in the ports.

③ Input port with removable connector adapter and dust cap. This port receives optical signals for loss, length, and power measurements.

④ Multimode output port with removable connector adapter and dust cap. This port transmits optical signals for loss and length measurements.

The LED below the output port is red when the port transmits 850 nm and green for 1300 nm.

⑤ Universal fiber connector (with dust cap) for the visual fault locator. The connector accepts 2.5 mm ferrules. The LED below the connector shows the locator's mode. See Chapter 14.

⑥ Button to manually control the output ports (② and ④) and the visual fault locator (⑤).

⑦ Micro USB port: This USB port lets you connect the tester to a PC so you can upload test results to the PC and install software updates in the tester.

⑧ Type A USB port: This USB host port lets you save test results on a USB flash drive and connect the video probe to the tester. On a Versiv main tester, this port lets you connect a Wi-Fi adapter for access to Fluke Networks cloud services. (Versiv 2 testers have an internal Wi-Fi radio.)

⑨ Headset jack. See "How to Use the Talk Function" on page 314.

⑩ TEST: Starts a test. To start a test, you can also tap **TEST** on the display.

⑪ ⏻: Power button. Versiv 2: The LED in the power button shows the status of the battery charging process. See Table 2 on page 19.

⑫ HOME: Press HOME to go to the home screen.

⑬ Connector for the AC adapter. Versiv: The LED is red when the battery charges, and green when the battery is fully charged. The LED is yellow if the battery will not charge. See "Charge the Battery" on page 18.

⑭ RJ45 connector: Lets you connect to a network for access to Fluke Networks cloud services.

⑮ Decal with laser safety information.

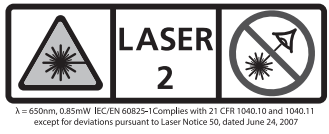

Refer to Figure 112:

① **PASS** LED comes on when a test passes.

TEST LED flashes during a test and when you manually turn on one of the output ports (⑥).

FAIL LED comes on when a test fails.

TALK LED comes on when the talk function is on. The LED flashes until the main tester accepts the request to talk. See "How to Use the Talk Function" on page 314.

TONE LED flashes if you press TEST when a main tester is not connected to the remote or is in **Far End Source** mode.

LOW BATTERY LED comes on when the battery is low.

The LEDs also have these functions:

- Battery gauge (see Figure 3 on page 21)
- Volume indicator for the **TALK** function
- Progress indicator for software updates

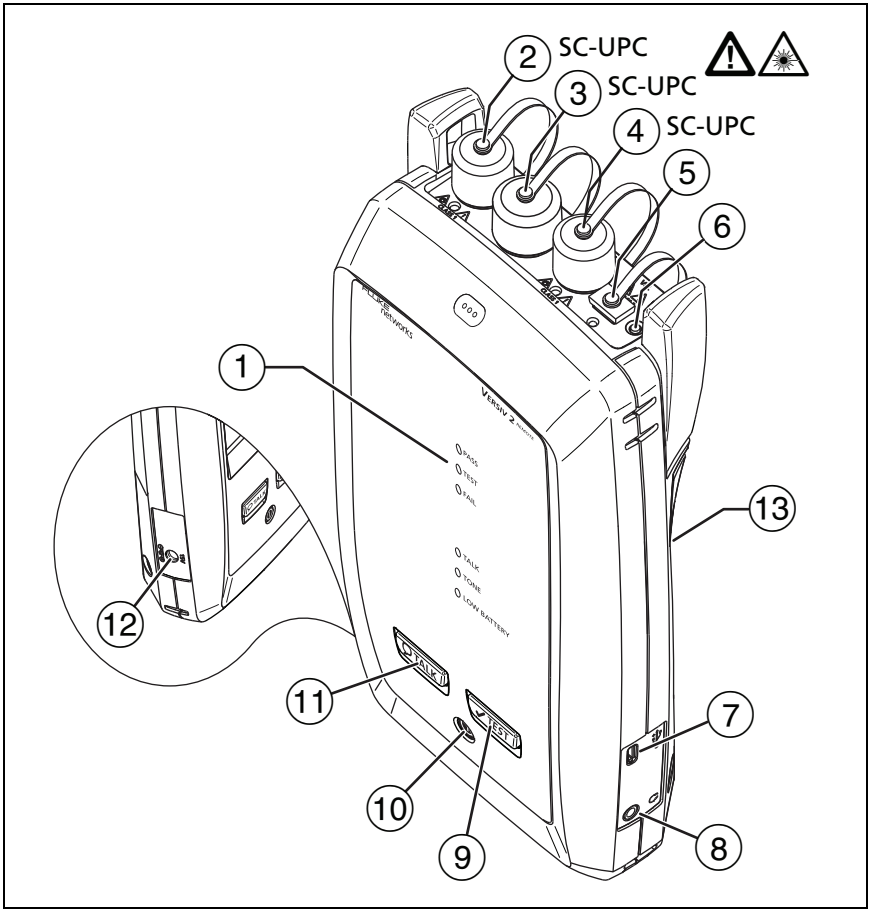

Figure 112. Remote CertiFiber Pro Tester Connectors, Keys, and LEDs (Versiv 2 with CFP-QUAD module shown)

② single-mode output port with removable connector adapter and dust cap. This port transmits optical signals for loss and length measurements.

The LED below the output port is red when the port transmits 1310 nm and green for 1550 nm.

⚠Caution

Do not connect APC connectors to the output ports. An APC connector can damage the UPC fiber endface in the ports.

③ Input port with removable connector adapter and dust cap. This port receives optical signals for loss, length, and power measurements.

④ Multimode output port with removable connector adapter and dust cap. This port transmits optical signals for loss and length measurements.

The LED below the output port is red when the port transmits 850 nm and green for 1300 nm.

⑤ Universal fiber connector (with dust cap) for the visual fault locator. The connector accepts 2.5 mm ferrules. The LED below the connector shows the locator's mode. See Chapter 14.

⑥ Button to manually control the output ports (② and ④) and the visual fault locator (⑤).

⑦ Micro USB port: This USB port lets you connect the tester to a PC so you can install software updates in the tester.

⑧ Headset jack. See "How to Use the Talk Function" on page 314.

⑨ TEST: Starts a test.

⑩ ⏻: Power key

⑪ TALK: Press TALK to use the headset to speak to the person at the other end of the link. Press again to adjust the volume. To turn off the talk function, hold down TALK.

⑫ Connector for the AC adapter. The LED is red when the battery charges, and green when the battery is fully charged. The LED is yellow if the battery will not charge. See "Charge the Battery" on page 18.

⑬ Decal with laser safety information.



λ = 650nm, 0.85mW IEC/EN 60825-1Complies with 21 CFR 1040.10 and 1040.11 except for deviations pursuant to Laser Notice 50, dated June 24, 2007

How to Remove and Install the Connector Adapters

You can change the connector adapters on the input ports of the modules to connect to SC, ST, LC, and FC fiber connectors. You can remove the adapter on the output port to clean the fiber endface in the port. See Figure 113.

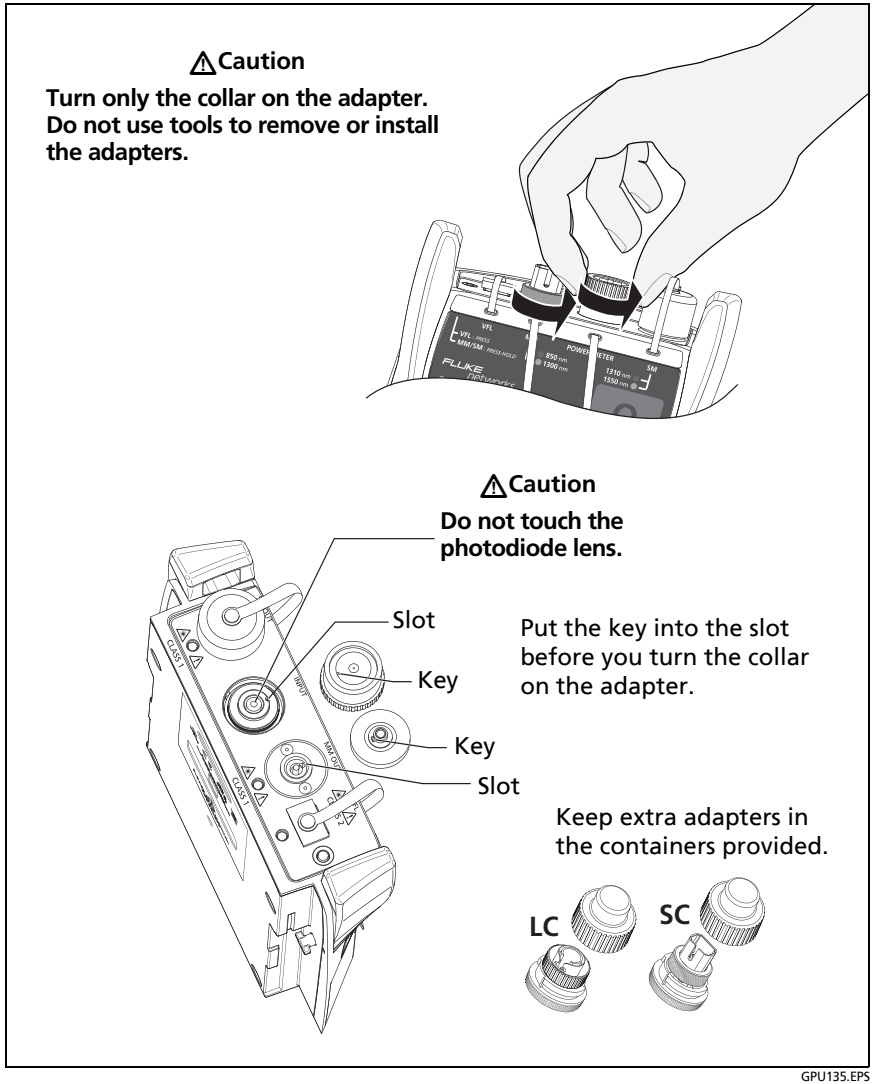

Figure 113. How to Remove and Install the Connector Adapters

The Home Screen for CertiFiber Pro Modules

The home screen (Figure 114) shows important test settings. Before you do a test, make sure these settings are correct.

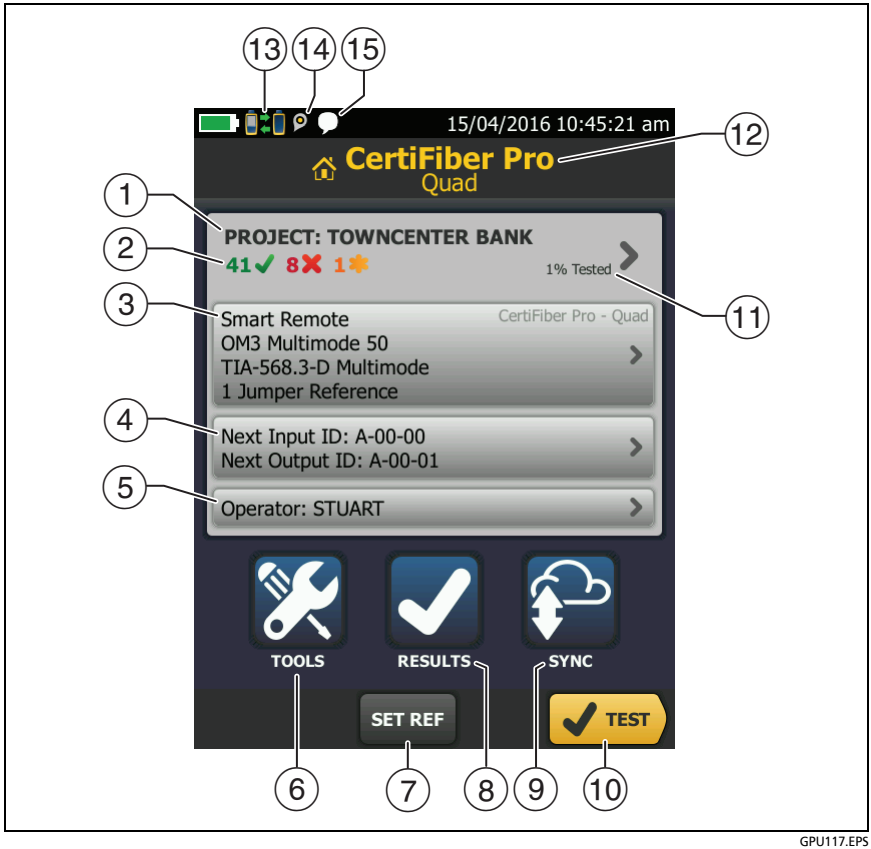

GPU117.EPS

Figure 114. The Home Screen for CertiFiber Pro Modules

① **PROJECT**: The project contains the settings for a job and helps you monitor the status of a job. When you save test results, the tester puts them in the project. Tap the **PROJECT** panel to edit the project settings, select a different project, or make a new project.

② Shows a summary of the test results in the project:

✔ The number of tests that passed.

✘ The number of tests that failed.

③ The test setup panel shows the settings the tester will use when you tap **TEST** or press ✔TEST.

To change these settings, tap the panel, select the test on the **CHANGE TEST** screen, tap **EDIT**, select different settings on the **TEST SETUP** screen, then tap **SAVE**. See Table 11 on page 272.

Note

You can set up tests for any module that the tester can use, even when no module is attached.

④ **Next ID**: The **Next ID** panel shows the ID that the tester gives to the next test results you save. For **Smart Remote** mode, this panel shows IDs for main tester's input and output fibers.

Tap **Next ID** to do these tasks:

- Enter an ID, select a different ID in the ID set, select a different set of IDs, or make a new set. The tester adds the IDs and ID sets you make to the project that shows on the home screen.
- Turn **Auto Save** on or off.

⑤ **Operator**: The name of the person who does the job. You can enter a maximum of 20 operator names. For each operator you can also enter the email address that the operator will use as an ID to sign in to LinkWare Live.

⑥ **TOOLS**: The **TOOLS** menu lets you set the reference for fiber tests, see the status of the tester, and set user preferences such as the language and the display brightness.

⑦ **SET REF**: Tap **SET REF** to set the reference and verify your test reference cords for loss/length tests.

⑧ **RESULTS**: Tap **RESULTS** to see and manage the results that are saved in the tester.

⑨ **SYNC**: To upload results to LinkWare Live, tap **SYNC**. See Chapter 18.

⑩ **TEST**: Tap **TEST** to do the test shown in the test setup panel.

⑪ The percentage of the tests in the project that are completed. The tester uses the number of available IDs to calculate this percentage. See Figure 208 on page 554. **% Tested** does not show if your project contains only a **Next ID** list. See "About Next ID Sets" on page 581 for more information about the **Next ID** list.

⑫ The type of module attached to the tester.

⑬  This icon shows when the input and output ports on the tester's CertiFiber Pro module are connected to the ports on the remote's CertiFiber Pro module, the remote tester is turned on, and **Smart Remote** or **Loopback** mode is selected.

⑭  The asset management icon shows when the owner of a LinkWare Live account has enabled the asset management service for the tester. See "Sign Your Tester Out of LinkWare Live" on page 597.

⑮  This icon shows when the talk function is on. To use the talk function. See "How to Use the Talk Function" on page 314.

Requirements for Reliable Fiber Test Results

To get reliable fiber test results and make sure your tester meets its accuracy specifications, you must use the correct procedures:

- Use proper cleaning procedures to clean all fiber connectors before every use. See Chapter 7.
- Set the reference frequently. See "About the Reference for Fiber Tests" on page 264.
- Use only test reference cords that comply with ISO/IEC 14763-3. Measure the loss of the cords frequently. See "About Test Reference Cords and Mandrels" on page 266.
- For multimode fiber, make sure you use the encircled flux test reference cords (EF-TRCs) or standard mandrels correctly. See "About the EF-TRC (Encircled-Flux Test Reference Cords)" on page 267 and "⚠Caution" on page 269.
- Keep the tester's software current. The latest software is available on the Fluke Networks website. See "Update the Software" on page 619.
- Make sure you select the correct fiber type and test limit for the job, and the index of refraction for the fiber is correct. See Table 11 on page 272.
- Make sure the battery is fully charged.
- Send the modules to a Fluke Networks service center every 12 months for factory calibration.

About the Reference for Fiber Tests

The reference procedure for fiber cable sets a baseline power level for loss measurements. If the power level that enters the fiber from the source changes, the reference and your loss measurements will be incorrect. The power level can change, for example, when the temperature at the job site increases or decreases or when you disconnect then reconnect a test reference cord at the tester's output port. So, it is important to set the reference frequently.

When to Set the Reference

Note

At the job site, turn on the testers and let them sit for a minimum of 5 minutes before you set the reference. Let them sit longer if they are above or below ambient temperature.

The tester requires you to set the reference at these times:

- When you change the CertiFiber Pro module in the main or remote tester.
- When you use a different remote tester.
- When you change the **Reference Method** in the test setup.

Set the reference also at these times:

- At the start of each day, at the job site, then at regular intervals during the day. For example, set the reference when you start tests on a different series of fibers.
- When you connect a test reference cord to the module's output port or to another source, even if you connect the same test reference cord you connected before.

- When the tester tells you that the reference is out of date.
- When a loss measurement is negative. This occurs when there was a problem when you set the reference. For example, an endface was dirty or the testers were cold.

⚠Caution

Do not disconnect the test reference cords from the modules' output ports after you set the reference. If you do, you will change the amount of optical power that enters the fiber and the reference will not be correct.

Good Reference Values

For **Smart Remote** and **Loopback** modes, these are the typical ranges for reference values:

- Multimode 50/125 µm fiber: -19.4 dBm to -26.5 dBm
- Multimode 62.5/125 µm fiber: -17.5 dBm to -23.0 dBm
- single-mode fiber: -1.0 dBm to -6.0 dBm

For **Far End Source** mode with a CertiFiber Pro source, reference values must be in these ranges:

- Multimode 50/125 µm fiber: -19.4 dBm to -26.5 dBm
- Multimode 62.5/125 µm fiber: -17.5 dBm to -23.0 dBm
- single-mode fiber: -1.0 dBm to -9.7 dBm

If your reference value is outside of the applicable range given above, clean and inspect all connectors then set the reference again. Do this even if the tester lets you use the value.

If your test reference cords and connectors are in good condition, and you use the correct procedure to set the reference, the reference value will not change by more than approximately 0.4 dBm.

How to See the Reference Values

- After you set the reference, tap **View Reference** on the **SET REFERENCE** screen.
- After you do an Autotest, tap the result window for a fiber, then tap **VIEW REFERENCE**.

About Test Reference Cords and Mandrels

Use only test reference cords (TRCs) that have low loss:

- **Maximum loss for multimode TRCs:** ≤ 0.15 dB
- **Maximum loss for single-mode TRCs:** ≤ 0.25 dB

To make sure your test results are accurate as possible:

- Inspect the endfaces of the TRCs every 24 to 48 tests and clean them when necessary.
- Use the **TRC VERIFICATION** wizard available for the **1 Jumper** method and **3 Jumper** reference methods to measure the losses of the TRCs. The losses of the TRCs are included in the loss measurements for links, so you must make sure the losses are very small. The wizard saves the results of the TRC tests to show that your TRCs were good. IDs for these results start with "TRC", show the date and time of the test, and have an  for the test result.

About the EF-TRC (Encircled-Flux Test Reference Cords)

The CFP-MM and CFP-QUAD kits includes the EF-TRC (encircled flux test reference cords), which have signal conditioners on the cords. When you use the EF-TRCs with the CertiFiber Pro multimode modules, your tester complies with IEC 61280-4-1, ISO/IEC 14763-3, and TIA-526-14-C standards for encircled flux. Measurements made with compliant equipment change less than 10 % for losses of 1 dB or more when you make them at different times or with different equipment that is also compliant.

Note

The IEC 61280-4-1, ISO/IEC 14763-3, and TIA-526-14-C standards require your optical loss test set to comply with encircled flux standards at 850 nm with 50 µm/125 µm fiber. The standards recommend compliance at 850 nm with 62.5 µm/125 µm fiber and at 1300 nm with 50 µm/125 µm and 62.5 µm/125 µm fiber.

⚠Caution

To prevent damage to fiber connectors, to prevent data loss, and to make sure that your test results are as accurate as possible:

- **Use the EF-TRC cords only with the CertiFiber Pro modules or with sources approved by Fluke Networks for use with the cords. If a source does not have the correct LED and internal fibers, the EF-TRC cords will not make launch conditions that agree with encircled flux standards.**
- **When you use the EF-TRCs, DO NOT use other mandrels.**
- **Always follow the handling guidelines given in Figure 115.**

- **Put protective caps on all connectors when you do not use them.**
- **Use EF-TRCs that have the fiber core dimension (50 µm or 62.5 µm) and type of connectors (SC, ST, LC, or FC) that are the same as the fiber link. Do not use EF-TRCs with hybrid patch cords to connect to links that have other types of connectors.**

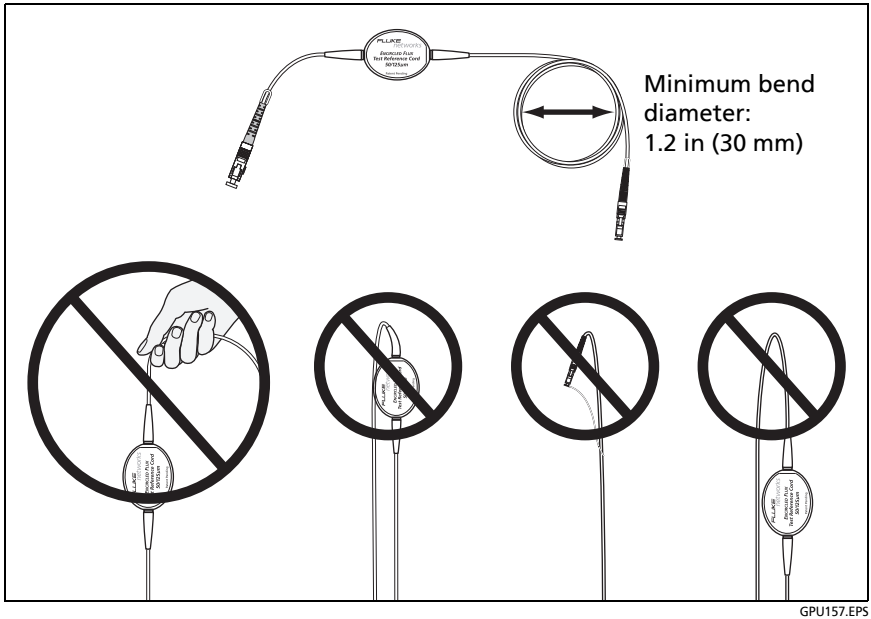

Figure 115. How to Prevent Damage to the EF-TRC Fiber Cables

About Standard Mandrels

Standard mandrels make measurements of multimode power loss more reliable than if you use no mandrels, but the measurements do not comply with the standards for encircled flux. Fluke Networks recommends that you always use only the EF-TRCs with the CertiFiber Pro multimode modules so that your measurements comply with EF standards.

If you must do tests in Far End Source mode with a different multimode source, and the source is not approved by Fluke Networks for use with the TRCs, use standard mandrels. Make sure you use the size of mandrel that is correct for 50 µm or 62.5 µm fiber, and read all instructions for the source and mandrel.

⚠Caution

If you use mandrels for tests on multimode fiber, do not use test reference cords made from bend-insensitive fiber. The mandrels possibly will not remove all of the modes that can make your loss measurements unreliable.

About APC Connectors

When you do tests on links with APC (angled physical contact) connectors, use only test reference cords with APC connectors on the ends connected to the link. If you connect non-APC connectors to the link, the connectors will cause large reflections that make loss measurements inaccurate.

For tests on links with APC connectors, use test reference cords that also have APC connectors on the ends connected to the tester's input ports. This is necessary for the 1 jumper reference method. You can connect APC connectors to the tester's input ports because the fiber does not touch the lens on the input port.

⚠Caution

Do not connect APC connectors to the output ports. An APC connector can damage the UPC fiber endface in the ports. Also, APC connectors will not receive enough optical power from the tester to give you reliable test results.

Figure 116 shows the TRCs necessary for tests on links with APC connectors.

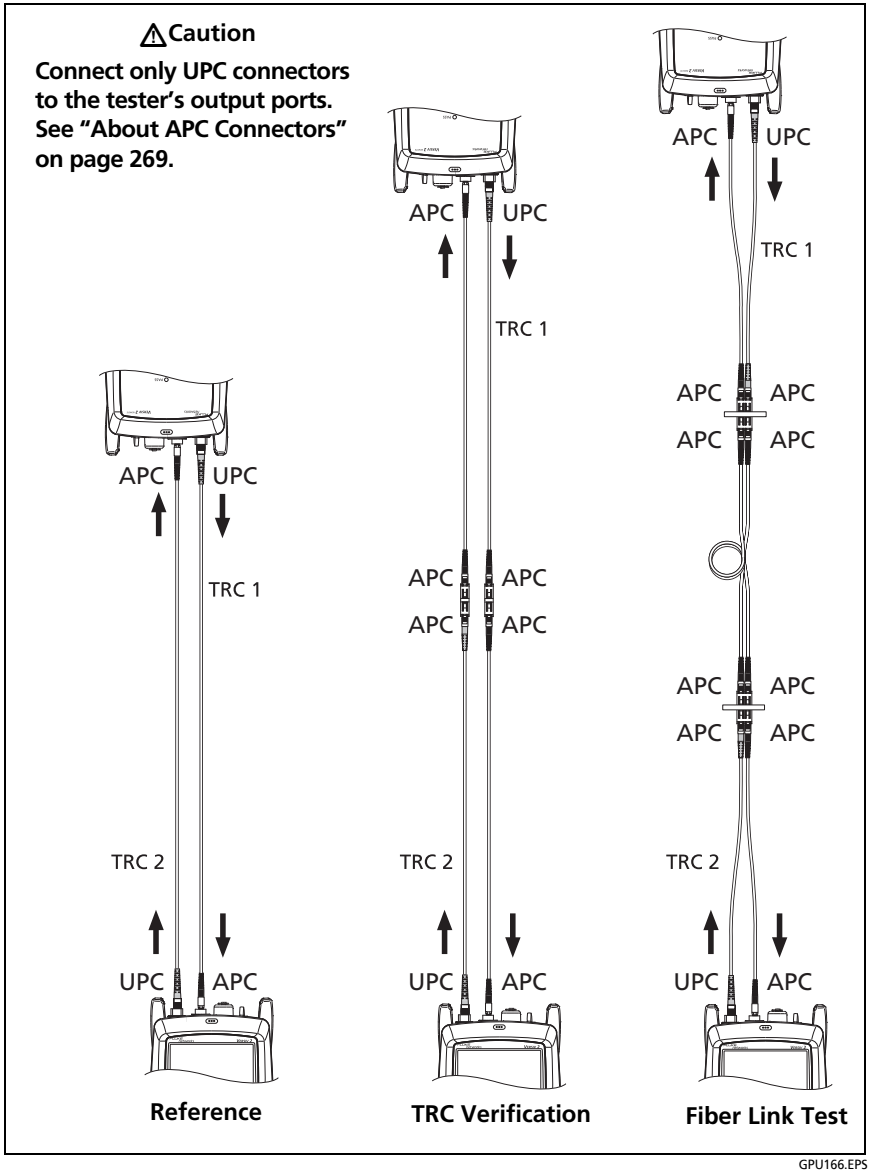

Figure 116. TRCs Necessary for Links with APC Connectors

Settings for Loss/Length Tests on Fiber

Table 11 gives descriptions of the settings for loss/length tests on fiber. To set up a project, which includes the settings in Table 11, cable IDs, and operator names, see Chapter 17.

To set up a loss/length test

1. On the home screen, tap the test setup panel.
2. On the **CHANGE TEST** screen, select a fiber test to change, then tap **EDIT**.

   Or to set up a new fiber test, tap **NEW TEST**. If no module is installed, the **MODULE** screen shows. Tap the correct CertiFiber Pro module.
3. On the **TEST SETUP** screen, tap the panels to change settings for the test. See Table 11.
4. On the **TEST SETUP** screen, tap **SAVE** when your test setup is completed.
5. On the **CHANGE TEST** screen, make sure the button next to the test is selected, then tap **USE SELECTED**.

Loss/Length Settings for Limits that Calculate a Loss Limit

Some test limits do not specify a limit for loss measurements. They specify maximum values of loss per kilometer of fiber and for the connectors and splices in the link. Then, the tester uses the measured length of the link, the number of connectors in the link, and the number of splices in the link to calculate a loss limit for that link.

When you select such a limit, you must enter the number of connectors and splices that are in the link. To enter these values, tap **Reference Method** or **No. of Connections/Splices** on the **TEST SETUP** screen. See **No. of Connections/Splices** in Table 11 on page 275.

The tester shows the calculated limit on the detailed results screen for the test. To see the loss budget calculated for the adapters, splices, and fiber, upload the test record to LinkWare PC, then click **Show Limit Budget Calculations** on the **Detail Results** tab for the record.

Table 11. Settings for Fiber Tests

Setting	Description
Module	Select the CertiFiber Pro module you will use. To select a different module, tap the **Module** panel on the **TEST SETUP** screen, then tap a module.
Test Type	Use **Smart Remote** mode for tests on duplex-fiber cabling. See page 280. Use **Loopback** mode for tests on patch cords and cable spools. See page 294. Use **Far End Source** mode for tests on single fibers. See page 301. **FiberInspector**: The FiberInspector test lets you use an FI-1000 FiberInspector™ or FI-3000/FI-3000-NW FiberInspector™ Pro video probe to inspect the endfaces in fiber optic connectors. See Chapter 8.
Bi-directional	**Off**: The tester does fiber tests in only one direction. **On**: The tester does fiber tests in both directions. See "Bi-directional Tests" on page 311. The **Bi-directional** setting is not available for **Far End Source** mode.
Fiber Type	Select a fiber type that is correct for the type you will test. To see a different group of fiber types, tap **MORE**, then tap a group. To make a custom fiber type, tap **Custom** in the **Fiber Groups** list. See Chapter 19 *Note* *When you select a fiber type, the **TEST LIMIT** screens show only the limits that are compatible with that fiber type.*

(continued)

Table 11. Settings for Fiber Tests (continued)

Fiber Type Settings	**IOR**: The tester uses the index of refraction to calculate the optical length of the fiber. Each fiber type includes the value specified by the manufacturer. To use a different **IOR**, make a custom fiber type. See Chapter 19.
Test Limit	Select the correct test limit for the job. To see a different group of limits, tap **MORE**, then tap the name of a group. To make a custom limit, tap **Custom** in the **Limit Groups** list. See Chapter 19 *Note* *The **TEST LIMIT** screens show only the limits that are compatible with the selected fiber type.*
Reference Method	On the **No. of Connectors/Splices** screen, set the number of jumpers you will use in each fiber path when you set the reference. The dotted lines in the diagram on the screen show you which parts of the link are included in the test results. The number of jumpers you use has these effects on loss measurements: **1 Jumper**: Loss measurements include the connections at both ends of the link. The figures in this manual show **1 Jumper** connections. **2 Jumper**: Loss measurements include one connection at one end of the link. **3 Jumper**: Loss measurements do not include the connections at the ends of the link. The tester measures only the loss of the fiber. This setting does not change the loss measurements, but it can change the **PASS/FAIL** result for test limits that use a calculated loss limit. For all test limits, the tester saves this setting to show the reference method you used. (continued)

Table 11. Settings for Fiber Tests (continued)

Reference Method (continued)	**⚠Caution** **Most cable manufacturers will give you a warranty on a fiber installation only if you use the 1 Jumper reference method when you certify the installation.** *Note* *Different standards use different names for the three methods. See Appendix B. For more information about the methods, see*
Connector Type	Select the type of connector, such as SC or LC, used in the cabling. The tester uses this setting when you do bi-directional tests. If you select a connector that has a threaded or bayonet coupler, such as FC or ST, the tester waits for you to confirm that the connection is complete before it starts the second part of the test. If you select a quick-release connector, such as SC or LC, the tester automatically starts the test when you connect the fiber. The tester also saves this setting to record the type of connector you used. This setting does not change your test results or any of the diagrams that the tester shows. If the correct type is not in the list, select **General**.
No. of Connectors/Splices	The **Total Connections** and **Splices** settings are applicable only if the selected test limit uses a calculated limit for loss. **Total Connections**: Enter the total number of connections that are in each path of the link. Do not adjust the number for the **Reference Method** you use. For example, if the link has 3 connections, enter "3" even if you use the **2** or **3 Jumper** reference method. When the tester calculates the loss limit, it automatically removes the losses of the connections you used to set the reference. (continued)

Table 11. Settings for Fiber Tests (continued)

No. of Connectors/Splices (continued)	*Note* *The CertiFiber Pro automatically adjusts the number of connections for the **Reference Method** you use. This is different from the DTX CableAnalyzer, where you do not include the reference connections in the number of connectors.* **Splices**: Enter the number of splices in each path of the link. **Jumpers**: Enter the number of jumpers you will use in each fiber path when you set the reference. The dotted lines in the diagram on the screen show you which parts of the link are included in the test results. See **Reference Method** above. Figure 117 shows the **No. of Connectors/Splices** screen. Figure 118 shows how to count the jumpers, connectors, and splices for this setting.
TRC LENGTH (Test reference cord length)	You can enter length of your test reference cords when you set the reference. To enter this value, tap **TRC LENGTH** on the **SET REFERENCE** screen. The length you enter does not change the test results. The tester saves the length with the results to meet TIA reporting requirements.

Refer to Figure 117:

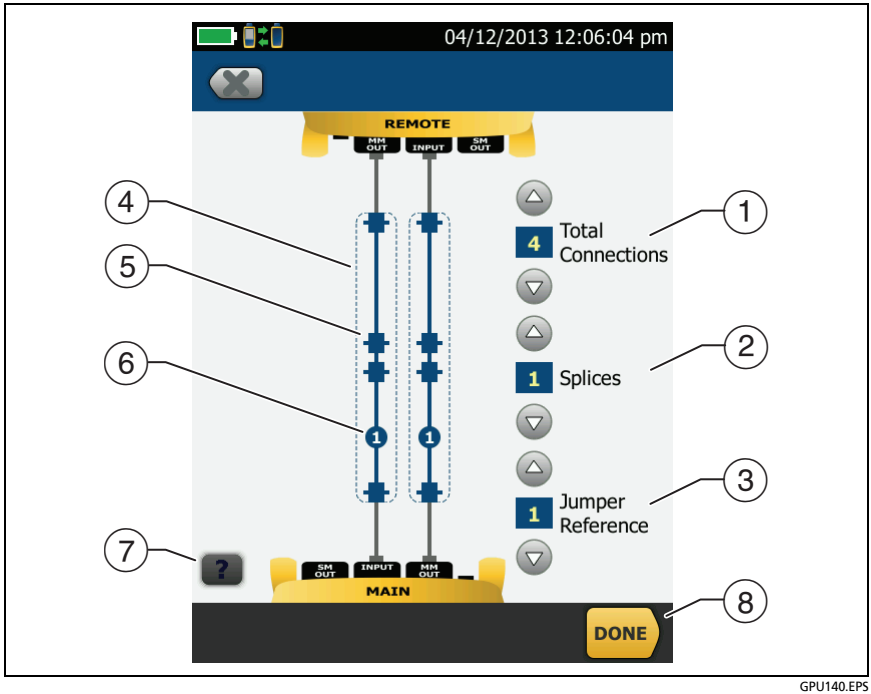

GPU140.EPS

Figure 117. Screen to Set the Number of Connectors, Splices, and Jumpers

① **Total Connections**: Enter the total number of connections that are in each path of the link. Do not adjust the number for the **Reference Method** you use. For example, if the link has 3 connections, enter "3" even if you use the **2** or **3 Jumper** reference method. When the tester calculates the loss limit, it automatically removes the losses of the connections you used to set the reference.

Note

For links with MPO modules, each module is one connector.

② **Splices**: Enter the number of splices that are in each path of the link.

③ **Jumper Reference**: Enter the number of jumpers you will use in each fiber path when you set the reference. The dotted lines in the diagram on the screen show you which parts of the link are included in the test results. See **Reference Method** on page 274.

④ The dotted lines show you which parts of the link are included in the test results.

⑤ Connector icons show the connections between the ends of the link. If you enter 7 or more for the **Total Connections** setting, a number inside of a connector icon shows the number of connectors between the ends of the link. For example, if the **Total Connections** setting is 7, a connector icon shows the number 5 (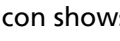)

⑥ The round icon shows the number of splices in each path of the link.

⑦ To see help for the screen, tap .

⑧ To save your settings, tap **DONE**.

About 1 Jumper Reference Connections

The reference and test connections shown in this manual give 1 jumper results. 1 jumper results include the loss of the fiber plus the loss of the connections at both ends of the link. This is the best method for tests on premises fiber installations. Premises installations typically use patch cords at both ends of the link, and connector loss is a large part of the total loss.

If you do not have the correct connector adapters, see Appendix C for other connections that give 1 jumper results.

For descriptions of the 2 and 3 jumper reference connections, see Appendix C.

⚠Caution

Most cable manufacturers will give you a warranty on a fiber installation only if you use a 1 Jumper reference when you certify the installation.

Note

*If you use a **2 Jumper** reference, the Wizard for the reference procedure does not show steps for the TRC verification. To save test results for the TRCs, do the tests manually.*

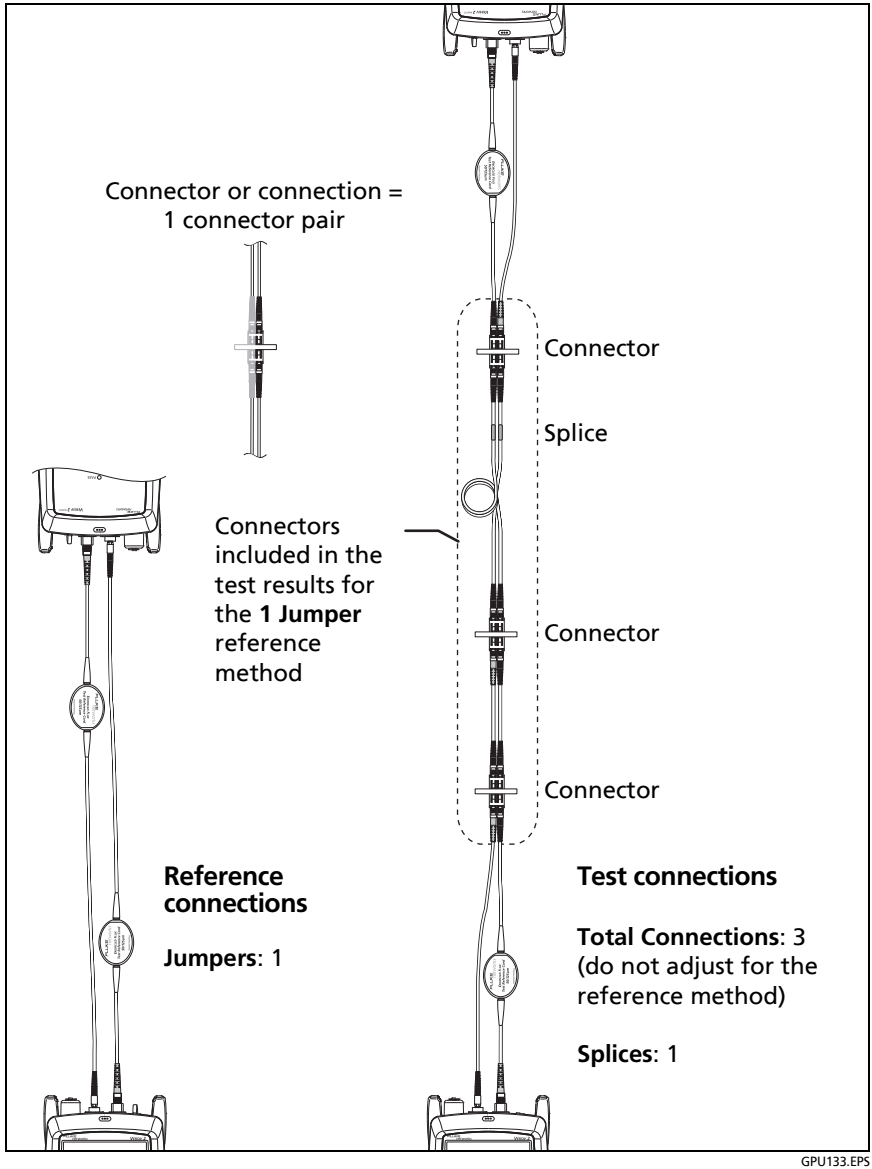

Figure 118. How to Count the Numbers of Connectors, Splices, and Jumpers

Autotest in Smart Remote Mode

Use **Smart Remote** mode to do tests on dual-fiber cabling.

In this mode, the tester measures loss and length on two fibers at two wavelengths. If you turn on the **Bi-Directional** function and swap the fibers halfway through the test, the tester makes measurements in both directions.

Figure 119 shows the equipment for tests in **Smart Remote** mode.

Fiber Tests with Two Main Testers

If you have two main testers, you can use one as a remote tester for tests in Smart Remote mode. This also lets you use FiberInspector video probes at both ends of the cabling for faster inspections of fiber endfaces.

To use a main tester as a remote

Tap **TOOLS** then tap **Main as Remote**.

Step 1: Set the Reference in Smart Remote Mode

1-1 Turn on the tester and remote and let them sit for a minimum of 5 minutes. Let them sit longer if they are above or below ambient temperature.

1-2 Make sure that the home screen shows the correct settings for the job, and the test type is **Smart Remote**.

1-3 To make sure that other settings are correct, tap the test setup panel, make sure the correct test is selected on the **CHANGE TEST** screen, then tap **EDIT** to see more settings. Table 11 on page 272 describes the settings.

1-4 Clean and inspect the connectors on the tester, remote, and test reference cords.

1-5 On the home screen tap **SET REF**.

(continued)

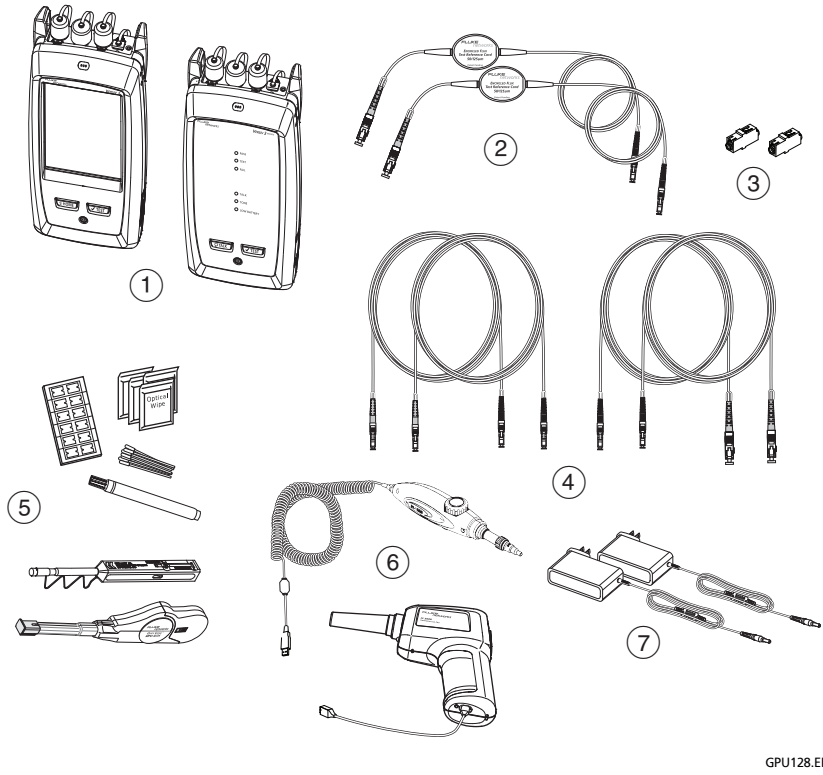

1. Main and remote testers with CertiFiber Pro modules installed
2. For multimode fiber: two EF-TRC test reference cords
3. Two single-mode adapters
4. For multimode fiber: two test reference cords. For single-mode fiber: four test reference cords.
5. Fiber cleaning supplies
6. FI-1000 or FI-3000 video probe with USB connector
7. AC adapters (optional)

Figure 119. Equipment for Autotests in Smart Remote Mode

1-6 On the **SET REFERENCE** screen, tap **RUN WIZARD**.

Notes

*To only set the reference, and not measure the loss of your test reference cords, tap **SKIP WIZARD** on the **SET REFERENCE** screen.*

Fluke Networks recommends that you measure the loss of your test reference cords each time you set the reference.

1-7 Make the connections to set the reference, as shown on the screen and in Figure 120, then tap **NEXT** to see the completed connections.

Notes

*The **SET REFERENCE** screen shows reference connections for the selected reference method. Figure 120 shows connections for a **1 Jumper** reference.*

When you set the reference, align the testers as shown in Figure 120 to keep the fibers as straight as possible.

1-8 To enter the length of the test reference cords you will add to connect to the link, tap **TRC LENGTH** on the **SET REFERENCE** screen. The length you enter does not change the test results. The tester saves the length with the results to meet TIA reporting requirements.

1-9 Tap **SET REFERENCE**.

If reference values are unacceptable, you can use the FiberInspector probe to inspect connectors. To turn on the probe, press the button on the probe. To go back to the reference screen, tap  .

1-10 If you did not use the connection wizard, go to step 3.

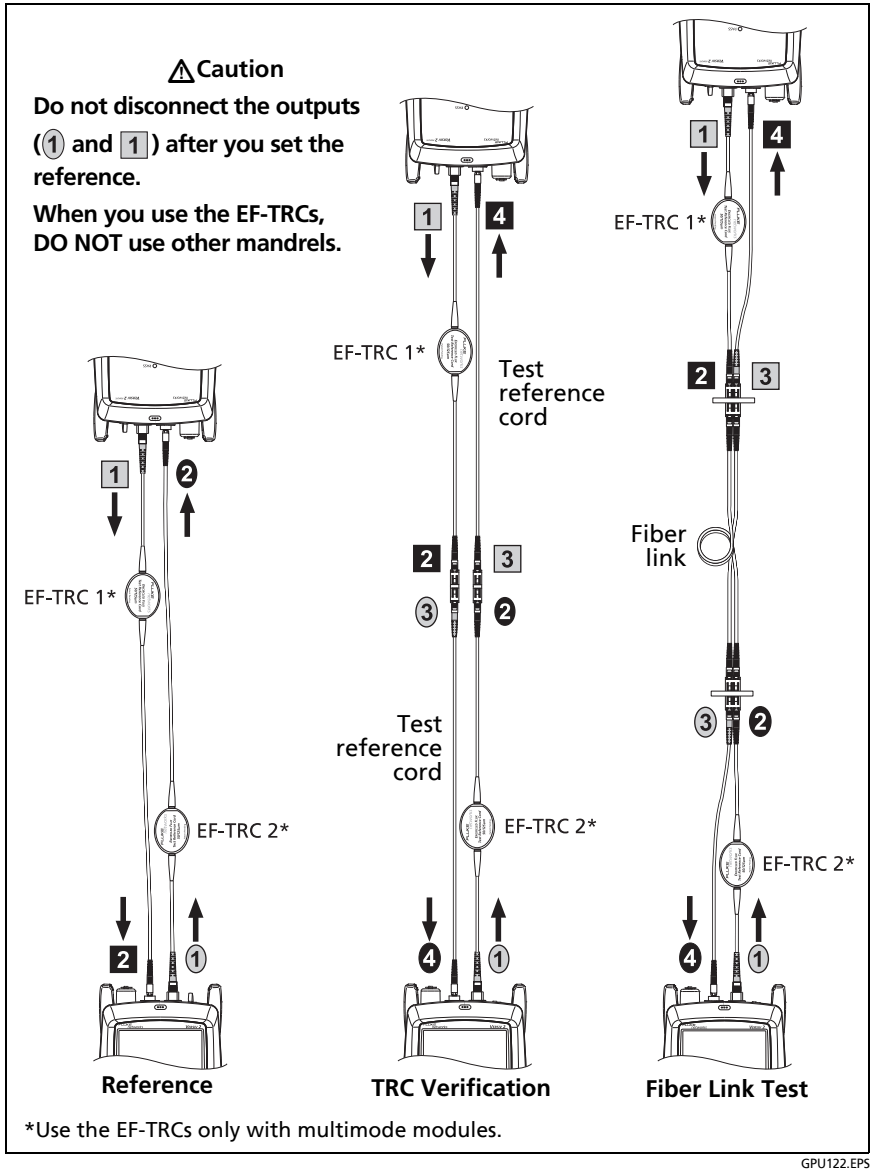

GPU122.EPS

Figure 120. Connections for Smart Remote Mode (1 Jumper Reference, Multimode Fiber)

Step 2: Measure the Loss of the Test Reference Cords You Will Add

⚠Caution

If you disconnected a test reference cord from the output of the tester or remote, you must set the reference again to make sure your measurements are reliable.

2-1 On the **SET REFERENCE** screen, when the reference procedure is completed, tap **NEXT**.

2-2 Disconnect the test reference cords from the INPUT ports on the tester and remote, then use test reference cords and adapters to make the connections to verify the TRCs, as shown on the screen and in Figure 120.

2-3 Tap **TRC VERIFICATION**. The tester measures and saves the loss of the test reference cords you added. The IDs for these results start with "TRC", show the date and time of the test, and have an ℹ for the test result.

The tester shows a warning if the loss of a TRC is more than these limits:

- **Maximum loss for multimode TRCs**: 0.15 dB
- **Maximum loss for single-mode TRCs**: 0.25 dB

If the tester shows a warning, clean and inspect the connectors on the TRCs in the path that has too much loss, make sure the cords are straight as shown in Figure 120, then do the TRC verification again.

Step 3: Do an Autotest in Smart Remote Mode

⚠Caution

If you disconnected a test reference cord from the output of the tester or remote, you must set the reference again to make sure your measurements are reliable.

3-1 On the **SET REFERENCE** screen, when the set reference or TRC verification procedure is completed, tap **NEXT** to see how to connect to the link under test.

3-2 Clean and inspect all the connectors.

3-3 Make the connections to do the test on the fiber link, as shown on the screen and in Figure 120, then press **HOME**.

3-4 Tap **TEST** on the main tester or press ✔TEST on the main or remote tester.

If the **CHECK FIBER CONNECTIONS** screen shows an open fiber:

- Make sure that all connections are good and no fibers have damage. Use the VFL to make sure the fibers in the link have continuity.
- Make sure that the remote is on.
- Switch the connections at one end of the patch panel.
- If you are not sure you are connected to the correct fibers, connect the main tester's INPUT fiber to different connections until the test continues or the INPUT fiber on the display is green. Then if necessary, connect the remote's INPUT fiber to different connections until the test continues.

(continued)

3-5 If **Bi-directional** is **On**: Halfway through the test, the tester tells you to switch the input and output fibers. See "Bi-directional Tests" on page 311.

3-6 Save the result:

- If **Auto Save** is on, the tester uses the next two IDs to save the results for the two fibers.
- If **Auto Save** is off, tap **SAVE** if the test passed or **FIX LATER** if the test failed. The **SAVE RESULT** screen shows the next two IDs available. You can change the IDs if necessary.

Autotest Results for Smart Remote Mode

Unsaved results show the results for both fibers. See Figures 121 and 122.

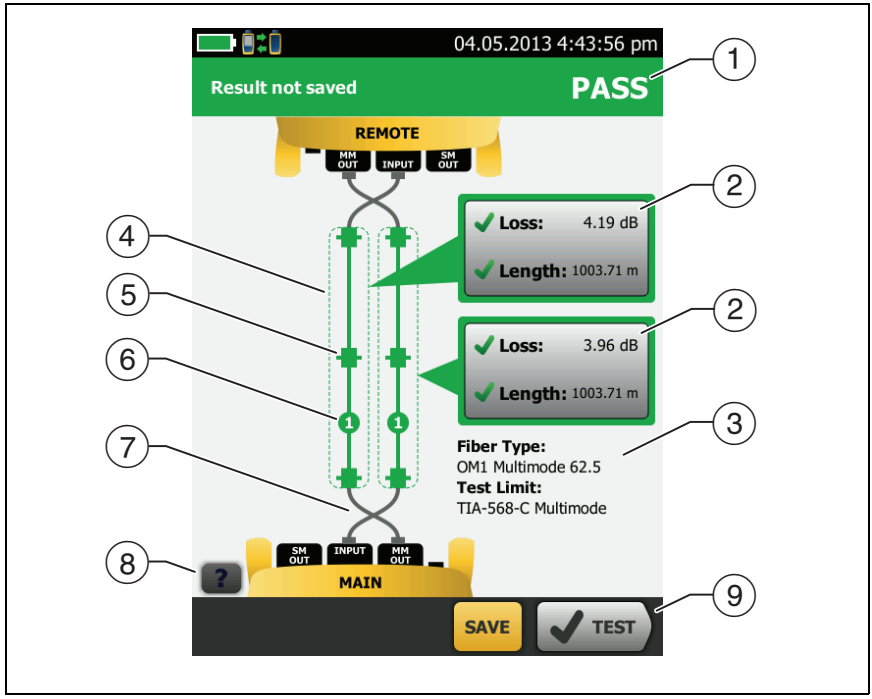

GPU118.EPS

Figure 121. Result for Smart Remote Mode (Unsaved Bi-directional Results Shown)

① The overall result for the Autotest.

② The fiber IDs and the loss and length measurements for the fibers:

The result exceeds the limit.

The result is within the limit.

The selected test limit does not have a limit for the test.

To see the results, limits, and margins for a fiber, tap the window. See Figure 122.

③ The settings the tester used for the test.

④ The dashed lines are around the connectors and fiber that are included in the loss and length results. Gray connectors and fibers are not included because you used them to set the reference.

⑤ Connector icons show the number you entered for the **TOTAL CONNECTIONS** setting on the **No. of Connectors/Splices** screen (Figure 117 on page 276). For Figure 121, the **TOTAL CONNECTIONS** setting is 4.

⑥ The round icon shows the number of splices entered for the **SPLICES** setting on the **No. of Connectors/Splices** screen.

⑦ Bi-directional results show the fibers crossed at the main and remote ports. The fibers show the connections as they are at the end of the test.

⑧ To see help for the screen, tap .

⑨ When more than one button shows at the bottom of the screen, the tester highlights one in yellow to recommend which one to tap. See “Buttons to Do Tests and Save Results” on page 63.



GPU146.EPS

Figure 122. Detailed Result for Smart Remote Mode (Unsaved Bi-directional Results Shown)

① The fiber that gave the results. **INPUT** and **OUTPUT** refer to the connector on the main tester where the fiber was connected at the end of the test.

② The **Test Type** and **Test Limit** used for the test.

③ The wavelengths the tester used for the test.

④ **LOSS**: Measurements of loss for each wavelength the tester used. The measurement is red if it exceeds the limit.

⑤ **LIMIT**: The maximum loss allowed by the selected test limit for each wavelength the tester used.

⑥ **MARGIN**: The difference between the limit and the measured loss for each wavelength the tester used. Margin is negative if the loss exceeds the limit.

⑦ Tap ? to see help for this screen.

If the results include warnings, tap ! to see the warnings.

⑧ **VIEW REFERENCE**: Tap this button to see the reference values and the date and time the reference was set.

⑨ **SETTINGS**: Tap this button to see the **TEST SETUP** settings used for the test.

⑩ **LENGTH**: This tab shows the length of the fiber, the maximum length allowed by the test limit, and the margin for the length measurement. If the distance to the end of the fiber does not agree at all wavelengths, this tab shows the longest length.

Note

The length shown for each fiber is half of the total length of both fibers.

⑪ **MAIN>REMOTE/REMOTE>MAIN**: If you did a bi-directional test, the tabs show the results for each direction for the second half of the test. Uni-directional results show only the **MAIN>REMOTE** tab.

Note

*The directions **Main>Remote** (main to remote) and **Remote>Main** (remote to main) in the bi-directional results are only the directions of the optical signals for the second half of the test. If a fiber fails, the direction does not tell you the location of the problem.*

Fiber IDs for Saved Results in Smart Remote Mode

If **Auto Save** is **On** and the test passed, the tester saves two records, one for each fiber. The records have the next two IDs in the ID list or sequence.

If your IDs are from a list, and you use the last ID in the list, the tester does not automatically save subsequent results. You must tap **SAVE** then enter one or both IDs to save the results.

How to Change Fiber IDs Before You Do Tests

Tap the **Next ID** panel on the home screen. On the **CHANGE ID** screen (Figure 123 on page 292), tap the **Input Fiber ID**, then enter a new ID. The tester automatically sets the **Output Fiber ID** to the next ID in the list or sequence.

How To Save Results with Non-Consecutive IDs

Set **Auto Save** to **Off** before you do the test. Then, on the **SAVE RESULT** screen, tap the **Input Fiber ID** or **Output Fiber ID** window to change the ID. For subsequent IDs, the tester uses the IDs that follow the **Output Fiber ID** you used.

How to Swap the Input and Output IDs

On the **CHANGE ID** and **SAVE RESULT** screens, you can tap  to swap the input and output IDs. The tester uses subsequent IDs from the list or sequence in descending order.

Figure 124 shows unsaved and saved results for bi-directional and uni-directional results.

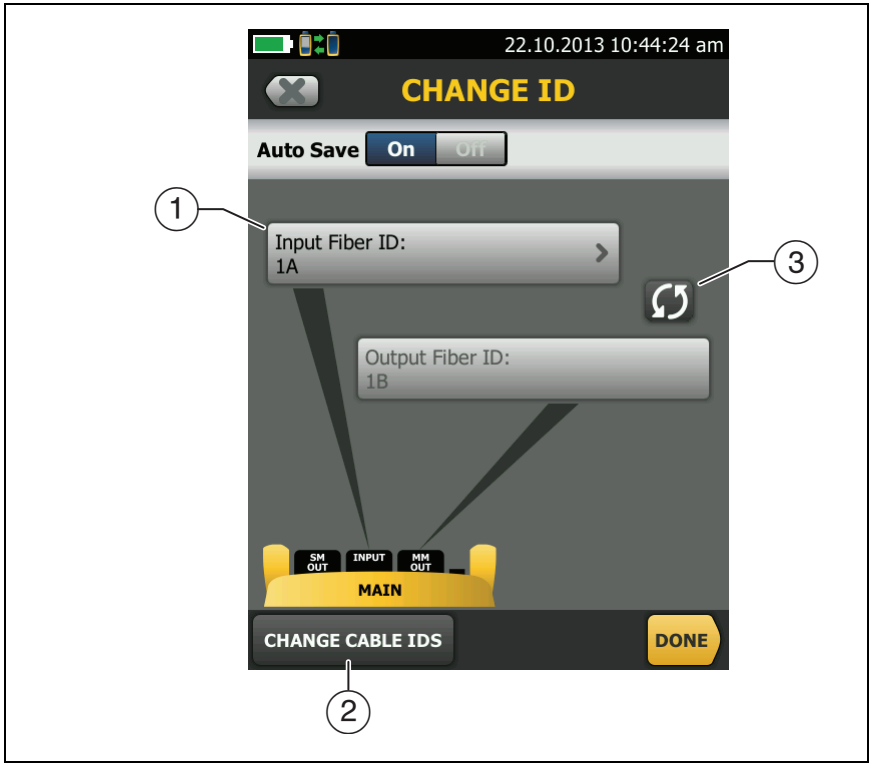

GPU161.EPS

Figure 123. CHANGE ID Screen for Smart Remote Mode

① **Input Fiber ID** and **Output Fiber ID** show the IDs for the fibers connected to the testers INPUT and OUTPUT ports at the end of the test. The **Input Fiber ID** follows the last **Output Fiber ID** you used. To see the input or output fiber IDs that have not been tested or to change the input ID, tap the **Input Fiber ID** window.

② To select or edit an ID set or to make a new ID set, tap **CHANGE CABLE IDs**.

③ To swap the input and output fiber IDs, tap . The tester uses subsequent IDs from the list or sequence in descending order.

Uni-Directional Results

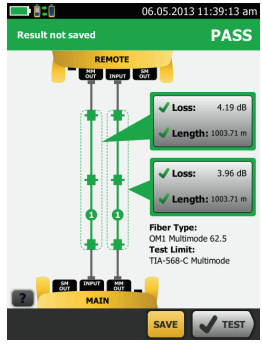

Unsaved uni-directional result

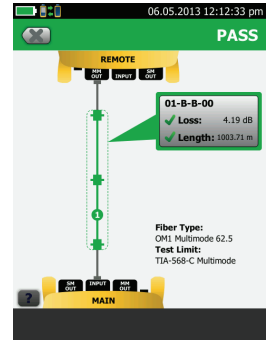

Saved uni-directional result for the input fiber

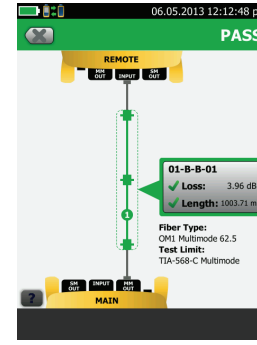

Saved uni-directional result for the output fiber

Bi-directional Results

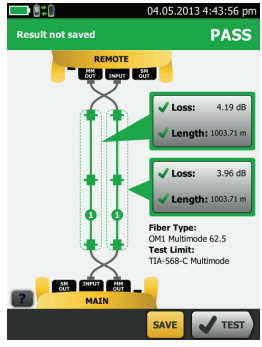

Unsaved bi-directional result.

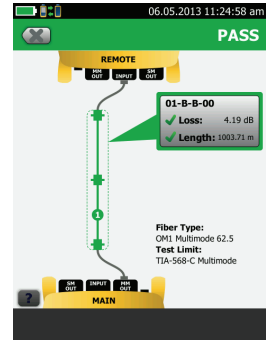

Saved bi-directional result for the output fiber.

Fiber 01-B-B-00 was connected to the INPUT port at the start of the test

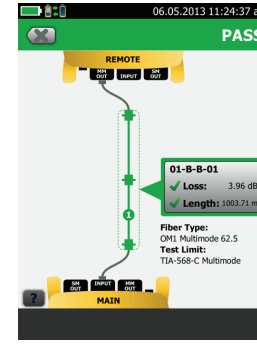

Saved bi-directional result for the input fiber

GPU145.EPS

Figure 124. Unsaved and Saved Result for Smart Remote Mode

Autotest in Loopback Mode

Use **Loopback** mode to do tests on spools of cable and segments of uninstalled cable.

In this mode, the tester measures loss and length at two wavelengths. If you turn on the **Bi-directional** function and swap the fibers halfway through the test, the tester makes measurements in both directions.

Figure 119 shows the equipment for tests in Loopback Mode.

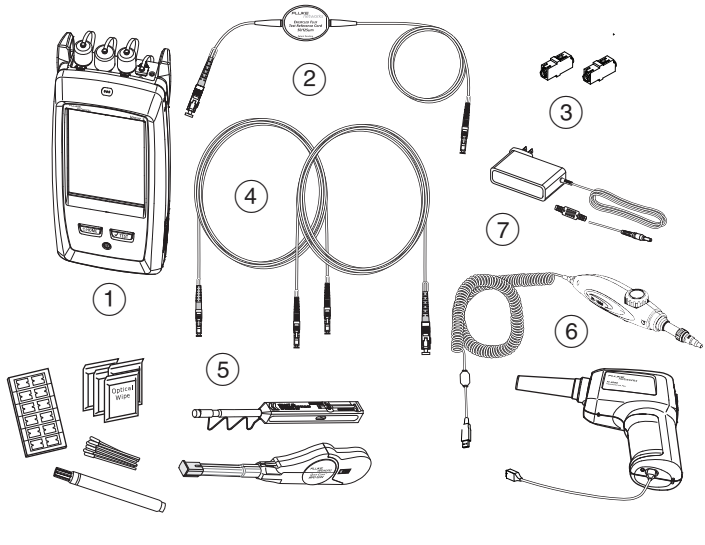

1. Main tester with CertiFiber Pro module installed
2. For multimode fiber: one EF-TRC test reference cord
3. Two single-mode adapters
4. For multimode fiber: one test reference cord. For single-mode fiber: two test reference cords.
5. Fiber cleaning supplies
6. FI-1000 or FI-3000 video probe with USB connector
7. AC adapters (optional)

Figure 125. Equipment for Autotests in Loopback Mode

Step 1: Set the Reference in Loopback Mode

1-1 Turn on the tester and let it sit for a minimum of 5 minutes. Let it sit longer if it is above or below ambient temperature.

1-2 Make sure that the home screen shows the correct settings for the job, and the test type is **Loopback**.

1-3 To make sure that other settings are correct, tap the test setup panel, make sure the correct test is selected on the **CHANGE TEST** screen, then tap **EDIT** to see more settings. Table 11 on page 272 describes the settings.

1-4 Clean and inspect the connectors on the tester and test reference cords.

1-5 On the home screen tap **SET REF**.

1-6 On the **SET REFERENCE** screen, tap **RUN WIZARD**.

Notes

*To only set the reference, and not measure the loss of your test reference cord, tap **SKIP WIZARD** on the **SET REFERENCE** screen.*

Fluke Networks recommends that you measure the loss of your test reference cord each time you set the reference.

1-7 Make the connection to set the reference, as shown on the screen, then tap **NEXT** to see the completed connections. Figure 126 also shows the completed connections.

Notes

*The **SET REFERENCE** screen shows reference connections for the selected reference method. Figure 126 shows connections for the **1 Jumper** reference.*

When you set the reference, keep the fiber as straight as possible.

(continued)

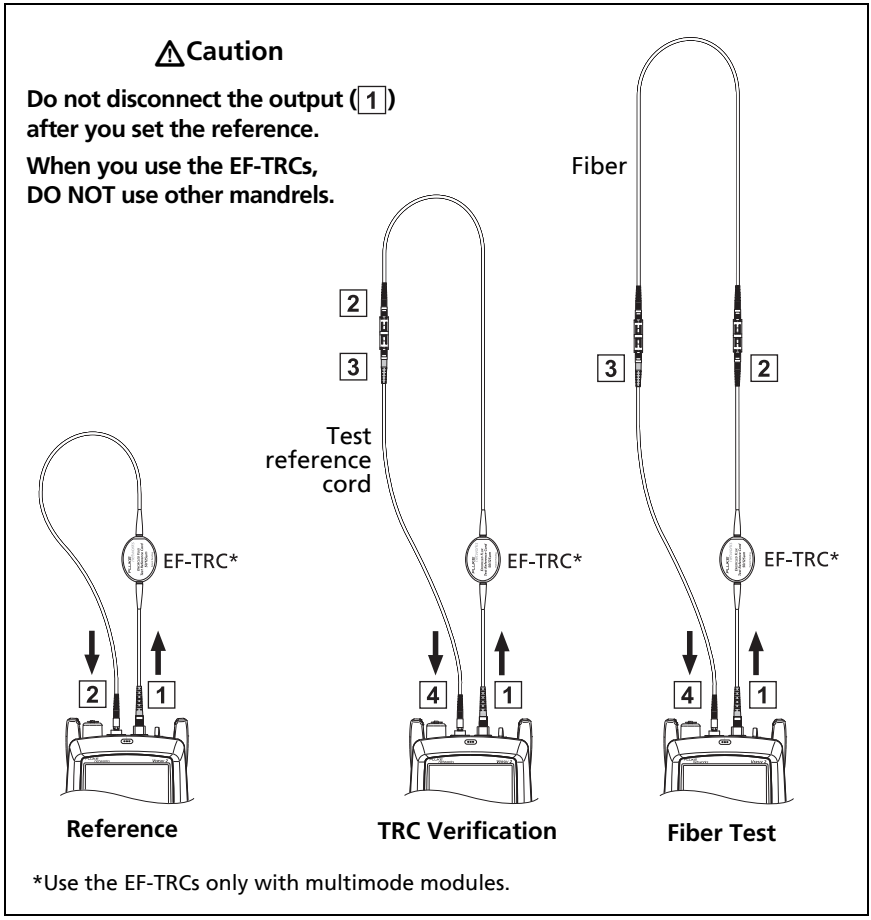

GPU131.EPS

Figure 126. Connections for Loopback Mode (1 Jumper Reference, Multimode Fiber)

1-8 To enter the length of the test reference cord you will add to connect to the fiber under test, tap **TRC LENGTH** on the **SET REFERENCE** screen. The length you enter does not change the test results. The tester saves the length with the results to meet TIA reporting requirements.

1-9 Tap **SET REFERENCE**.

If reference values are unacceptable, you can use the FiberInspector probe to inspect connectors. To turn on the probe, press the button on the probe. To go back to the reference screen, tap  .

1-10 If you did not use the connection wizard, go to step 3.

Step 2: Measure the Loss of the Test Reference Cord You Will Add

⚠Caution

If you disconnected the test reference cord from the output of the tester, you must set the reference again to make sure your measurements are reliable.

2-1 On the **SET REFERENCE** screen, when the reference procedure is completed, tap **NEXT**.

2-2 Disconnect the test reference cord from the INPUT port on the tester, then use a test reference cord and adapter to make the connections to verify the TRCs, as shown on the screen and in Figure 126.

2-3 Tap **TRC VERIFICATION**. The tester measures and saves the loss of the test reference cord you added. The ID for this result starts with "TRC", shows the date and time of the test, and has an  for the test result.

The tester shows a warning if the loss of a TRC is more than these limits:

- **Maximum loss for multimode TRCs**: 0.15 dB
- **Maximum loss for single-mode TRCs**: 0.25 dB

If the tester shows a warning, clean and inspect the connectors on the TRC, make sure the cords do not have tight bends, as shown in Figure 126, then do the TRC verification again.

Step 3: Do an Autotest in Loopback Mode

⚠Caution

If you disconnected the test reference cord from the output of the tester, you must set the reference again to make sure your measurements are reliable.

3-1 On the **SET REFERENCE** screen, when the set reference or TRC verification procedure is completed, tap **NEXT** to see how to connect to the fiber under test.

3-2 Clean and inspect the connectors on the fiber under test.

3-3 Make the connections to do the test on the fiber, as shown on the screen and in Figure 126, then press **HOME**.

3-4 Tap **TEST** on the main tester or press ✔TEST on the main or remote tester.

If the **CHECK FIBER CONNECTIONS** screen shows an open fiber:

- Make sure that all connections are good and no fibers have damage. Use the VFL to make sure the fiber under test has continuity.
- If you are connected to fibers at a patch panel that are connected together at the far end, and you are not sure you are connected to the correct fibers, connect the main tester's INPUT fiber to different connections until the test continues.

3-5 If **Bi-directional** is **On**: Halfway through the test, the tester tells you to switch the input and output fibers. See "Bi-directional Tests" on page 311.

3-6 If **Auto Save** is on, the tester uses the next ID to save the results.

If **Auto Save** is off, the **SAVE RESULT** screen shows the next ID available. You can change the ID if necessary.

Autotest Results for Loopback Mode

Figure 127 shows an example of Autotest results for Loopback mode.

① The overall result for the Autotest.

② The loss and length measurements for the fiber:

The result exceeds the limit.

The result is within the limit.

The selected test limit does not have a limit for the test.

To see the results, limits, and margins for the fiber, tap the window.

③ The settings the tester used for the test.

④ The dashed lines are around the connectors and fiber that are included in the loss and length results. Gray connectors and fibers are not included because you used them to set the reference.

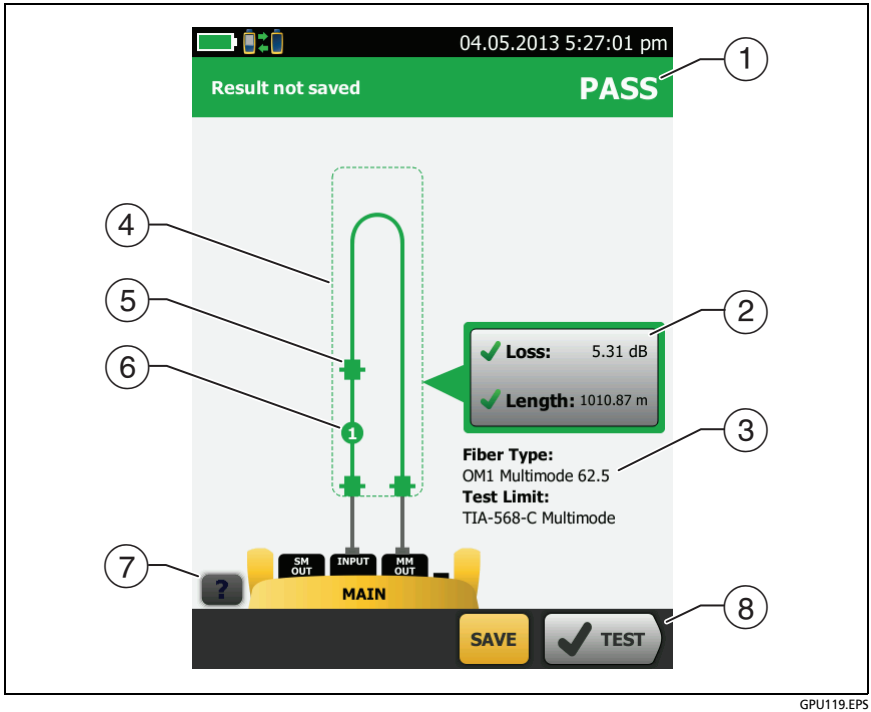

Figure 127. Result for Loopback Mode

⑤ Connector icons show the number you entered for the **TOTAL CONNECTIONS** setting on the **No. of Connectors/Splices** screen (Figure 117 on page 276). For Figure 127, the **TOTAL CONNECTIONS** setting is 3.

⑥ The round icon shows the number of splices entered for the **SPLICES** setting on the **No. of Connectors/Splices** screen.

⑦ To see help for the screen, tap ?.

⑧ When more than one button shows at the bottom of the screen, the tester highlights one in yellow to recommend which one to tap. See “Buttons to Do Tests and Save Results” on page 63.

Autotest in Far End Source Mode

Use **Far End Source** mode to measure loss at two wavelengths on one fiber.

In this mode, you can use the CertiFiber Pro remote or another source, such as the Fluke Networks SimpliFiber® Pro source, at the far end of the fiber.

⚠Caution

For Far End Source mode, use the EF-TRC cords only with the CertiFiber Pro modules or with sources approved by Fluke Networks for use with the cords. If a source does not have the correct LED and internal fibers, the EF-TRC cords will not make launch conditions that comply with encircled flux standards. If the source is not approved, use a standard mandrel.

Figure 128 shows the equipment for tests in Far End Source mode.

Auto Wavelength Modes

CertiFiber Pro modules and SimpliFiber Pro sources have an auto wavelength mode. In this mode, the output port transmits both wavelengths (850 nm and 1300 nm or 1310 nm and 1550 nm). The signal includes identifiers that tell the meter when to measure power at each wavelength. The CertiFiber Pro module in the remote always operates in auto wavelength mode.

To select **Auto CertiFiber Pro** or **Auto SimpliFiber Pro** mode, you tap the setting when the tester shows the **TEST MODE** window. The **TEST MODE** window shows each time you set the reference.

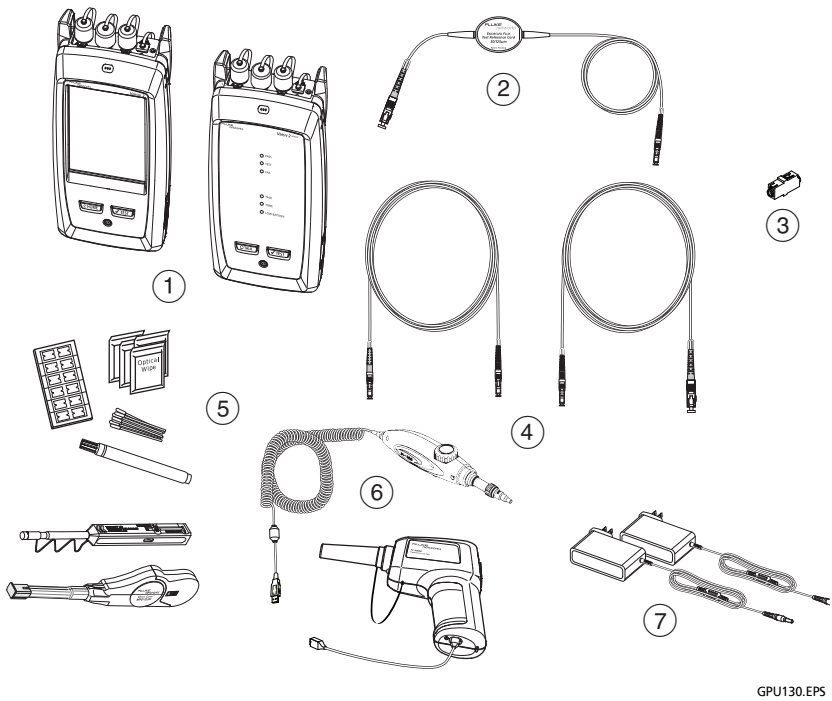

1. Main and remote testers with CertiFiber Pro modules installed
2. For multimode fiber: one EF-TRC test reference cord
3. One single-mode adapter
4. For multimode fiber: one test reference cord. For single-mode fiber: two test reference cords.
5. Fiber cleaning supplies
6. FI-1000 or FI-3000 video probe with USB connector
7. AC adapters (optional)

Figure 128. Equipment for Autotests in Far End Source Mode

Step 1: Set the Reference in Far End Source Mode

1-1 Turn on the tester and source let them sit for a minimum of 5 minutes. Let them sit longer if they are above or below ambient temperature, or if the instructions for the source specify a longer time.

1-2 Make sure that the home screen shows the correct settings for the job, and the test type is **Far End Source**.

To make sure that other settings are correct, tap the test setup panel, make sure the correct test is selected on the **CHANGE TEST** screen, then tap **EDIT** to see more settings. Table 11 on page 272 describes the settings.

1-3 Clean and inspect the connectors on the tester, source, and test reference cords.

1-4 On the home screen tap **SET REF**.

1-5 In the **TEST MODE** window, select **Auto CertiFiber Pro** or the type of source you will use, then tap **DONE**.

1-6 On the **SET REFERENCE** screen, tap **RUN WIZARD**.

Notes

*To only set the reference, and not measure the loss of your test reference cord, tap **SKIP WIZARD** on the **SET REFERENCE** screen.*

Fluke Networks recommends that you measure the loss of your test reference cord each time you set the reference.

1-7 Make the connections to set the reference as shown on the screen, then tap **NEXT** to see the completed connections. Figure 129 also shows the completed connections.

(continued)

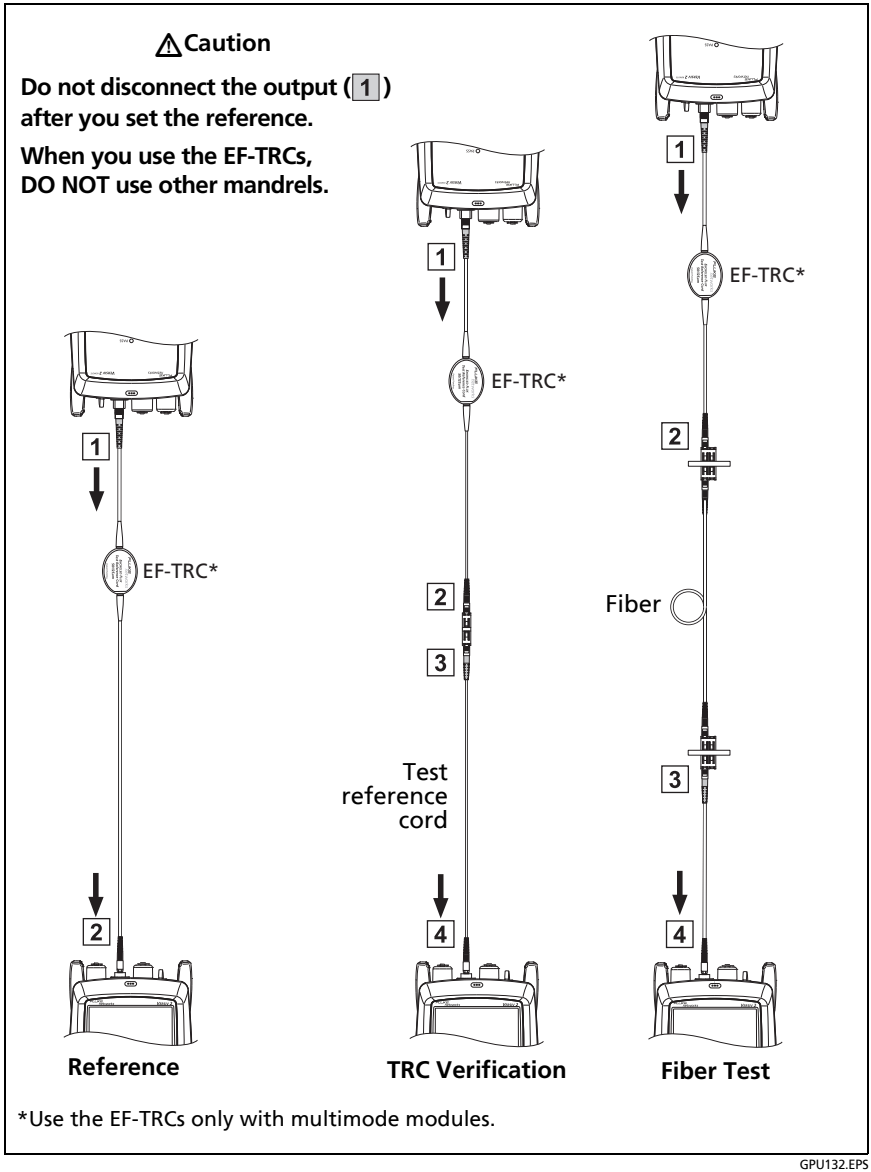

Figure 129. Connections for Far End Source Mode (1 Jumper Reference, Multimode Fiber)

Notes

*The **SET REFERENCE** screen shows reference connections for the selected reference method. Figure 129 shows connections for the **1 Jumper** reference.*

When you set the reference, keep the fiber as straight as possible.

1-8 Turn on the optical source. On the CertiFiber Pro remote module, hold down the button adjacent to the VFL port for 3 seconds to turn on the multimode source. See Figure 130.

On CFP-QUAD modules, to turn on the single-mode source, press the button again.

Note

The CertiFiber Pro module in the remote always operates in auto wavelength mode. The output port transmits both wavelengths (850 nm and 1300 nm or 1310 nm and 1550 nm). The signal includes identifiers that tell the main tester when to measure power at each wavelength.

1-9 To enter the length of the test reference cord you will add to connect to the fiber under test, tap **TRC LENGTH** on the **SET REFERENCE** screen. The length you enter does not change the test results. The tester saves the length with the results to meet TIA reporting requirements.

1-10 Tap **SET REFERENCE**.

If reference values are unacceptable, you can use the FiberInspector probe to inspect connectors. To turn on the probe, press the button on the probe. To go back to the reference screen, tap  .

1-11 If you did not use the connection wizard, go to step 3.

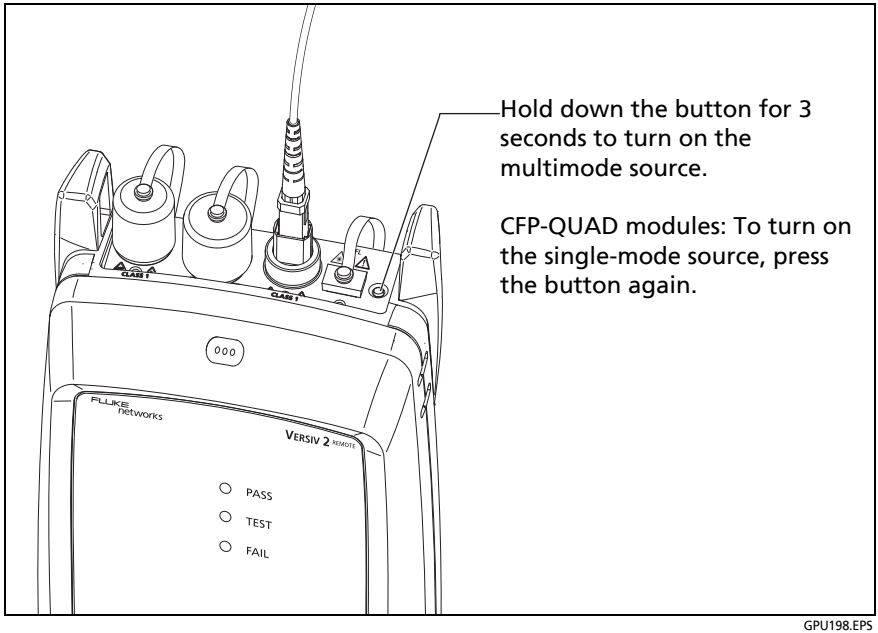

Figure 130. How to Turn on the Remote's Optical Source

Step 2: Measure the Loss of the Test Reference Cord You Will Add

⚠Caution

If you disconnected the test reference cord from the output of the tester, you must set the reference again to make sure your measurements are reliable.

2-1 On the **SET REFERENCE** screen, when the reference procedure is completed, tap **NEXT**.

2-2 Disconnect the test reference cord from the INPUT port on the tester, then use a test reference cord and adapter to make the connections to verify the TRCs, as shown on the screen and in Figure 129.

2-3 Tap **TRC VERIFICATION**. The tester measures and saves the loss of the test reference cord you added. The ID for this result starts with "TRC", shows the date and time of the test, and has an for the test result.

The tester shows a warning if the loss of a TRC is more than these limits:

- **Maximum loss for multimode TRCs**: 0.15 dB
- **Maximum loss for single-mode TRCs**: 0.25 dB

If the tester shows a warning, clean and inspect the connectors on the TRC, make sure the cords are straight as shown in Figure 129, then do the TRC verification again.

Step 3: Do an Autotest in Far End Source Mode

⚠Caution

If you disconnected the test reference cord from the output of the tester, you must set the reference again to make sure your measurements are reliable.

3-1 On the **SET REFERENCE**, when the set reference or TRC verification procedure is completed, tap **NEXT** to see how to connect to the fiber under test.

3-2 Clean and inspect the all connectors.

3-3 Make the connections to do the test on the fiber, as shown on the screen and in Figure 129, then press **HOME**.

3-4 If necessary, select **End 1** or **End 2**: On the home screen, tap the **Next ID:** panel, then tap the **End 1/End 2** control to select an end.

3-5 Tap **TEST** on the main tester or press TEST on the main or remote tester.

3-6 If the **CHECK FIBER CONNECTIONS** screen shows an open fiber:

- Make sure that all connections are good and no fibers have damage. Use the VFL to make sure the fiber under test has continuity.
- If you are connected to a fiber at a patch panel, and you are not sure you are connected to the correct fiber, connect the main tester's INPUT fiber to different connections until the test continues.

3-7 If **Auto Save** is on, the tester uses the next ID to save the results.

If **Auto Save** is off, the **SAVE RESULT** screen shows the next ID available. You can change the ID if necessary.

Note

*To put **End 1**/**End 2** results together in the same record, use LinkWare PC software to merge the results.*

Autotest Results for Far End Source Mode

Figure 131 shows an example of Autotest results for Far End Source mode.

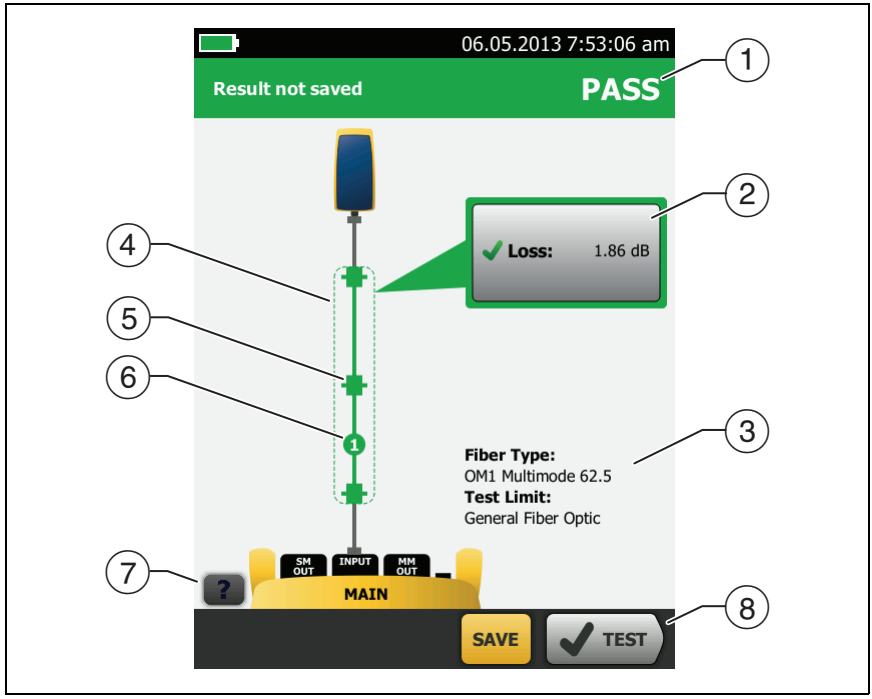

GPU120.EPS

Figure 131. Result for Far End Source Mode

① The overall result for the Autotest.

② The loss and length measurements for the fiber:

The result exceeds the limit.

The result is within the limit.

The selected test limit does not have a limit for the test. (see the note on the next page)

To see the results, limit, and margins for the fiber, tap the window.

Note

The Autotest in Far End Source mode does not show a PASS/FAIL result, limit, or margin if the selected test limit uses fiber length to calculate loss. An example of such a limit is the General Fiber Optic limit. The tester does not measure length in Far End Source mode.

③ The settings the tester used for the test.

④ The dashed lines are around the connectors and fiber that are included in the loss and length results. Gray connectors and fibers are not included because you used them to set the reference.

⑤ Connector icons show the number you entered for the **TOTAL CONNECTIONS** setting on the **No. of Connectors/Splices** screen (Figure 117 on page 276). For Figure 131, the **TOTAL CONNECTIONS** setting is 1.

⑥ The round icon shows the number of splices entered for the **SPLICES** setting on the **No. of Connectors/Splices** screen.

⑦ To see help for the screen, tap .

⑧ When more than one button shows at the bottom of the screen, the tester highlights one in yellow to recommend which one to tap. See "Buttons to Do Tests and Save Results" on page 63.

Bi-directional Tests

Do bi-directional tests when they are required by the manufacturer or by your customer.

The tester can automatically do bi-directional tests in Smart Remote and Loopback modes. To get bi-directional results in Far End Source mode, do a test from each end of the fiber.

In Smart Remote mode, the tester saves bi-directional results in two records. Each record contains the results for one fiber for both directions.

To do a bi-directional test

Note

*When you make connections for a bi-directional test in Smart Remote mode, connect the fiber that has the **Input Fiber ID** to the main tester's OUTPUT port, and the fiber that has the **Output Fiber ID** to the main tester's INPUT port. Halfway through the test, you will switch the connections.*

1 Set the reference and measure the loss of the TRCs for the mode you will use:

- Smart Remote mode: See "Set the Reference in Smart Remote Mode" on page 280 and "Measure the Loss of the Test Reference Cords You Will Add" on page 284
- Loopback Mode: See"Set the Reference in Loopback Mode" on page 295 and "Measure the Loss of the Test Reference Cord You Will Add" on page 297.

2 Connect to the link as shown on the left side of Figure 132.

3 On the home screen, tap the test setup panel, make sure the correct test is selected on the **CHANGE TEST** screen, then tap **EDIT**.

4 On the **TEST SETUP** screen, in the **Bi-directional** panel, tap the control to make it show **On**, then tap **SAVE**.

5 Do an Autotest.

6 Halfway through the test, the tester tells you to switch the input and output fibers. Connect to the link as shown on the right side of Figure 132.

⚠Caution

Switch the connections at both ends of the patch panel or fiber under test, not at the tester's and remote's ports. If you disconnect a test reference cord from an output port on the tester or remote, the reference value will be unreliable.

Note

*The directions **Main>Remote** (main to remote) and **Remote>Main** (remote to main) in the bi-directional results are only the directions of the optical signals for the second half of the test. If a fiber fails, the direction does not tell you the location of the problem.*

7 If **Auto Save** is on and the tester is in Smart Remote mode, the tester uses the next two IDs to save the results for the two fibers.

If **Auto Save** is off, the **SAVE RESULT** screen shows the next two IDs available. You can change the IDs if necessary.

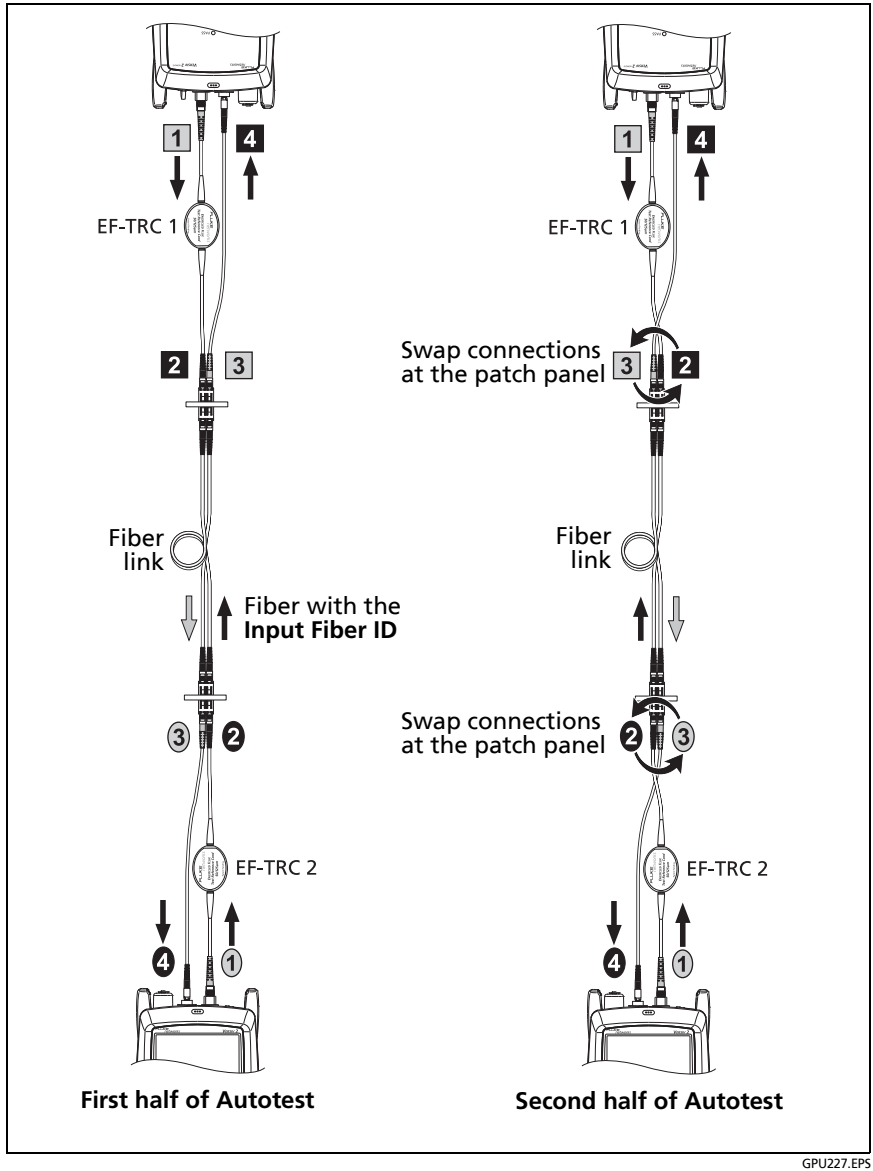

GPU227.EPS

Figure 132. Connections for a Bi-directional Test in Smart Remote Mode (1 Jumper Reference, Multimode Fiber)

How to Use the Talk Function

If you have two testers and two CertiFiber Pro OLTS modules, you can use the talk function to talk to the person at the other end of a duplex fiber link.

Note

The talk mode does not operate during tests.

To use the talk function

1. Connect the main and remote testers together through a duplex fiber link.
2. Connect headsets to the headset jacks on the testers (see Figure 111 on page 252).
3. Press the button on one of the headset microphones or press TALK on the remote tester, then speak into the microphone.

   When the talk function is on,  shows at the top of the screen on the main tester. On the remote tester, the **TALK** LED is on.
4. To adjust the volume at the main tester, press the button on the headset's microphone as necessary, or move the slider control in the **Talk Enabled** window.

   To adjust the volume at the remote tester, press TALK or the button on the headset's microphone as necessary. The LEDs on the remote show the volume level.
5. To turn off the talk function, hold down the button on one of the headsets or hold down TALK on the remote tester.

Chapter 10: The Power Meter and Light Source

You can use the CertiFiber Pro main tester to monitor and save measurements of optical power and loss, and you can use the main or remote tester and as an optical power source. You can use the main tester's power or loss meter and its light source at the same time.

How to Monitor Power and Loss

The power meter lets you monitor the optical power supplied by a source such as an optical network interface card or optical test equipment. You can do these tasks:

- Monitor minimum and maximum power levels in **dBm** (decibels per milliwatt), **mW** (milliwatts), **µW** (microwatts), or **nW** (nanowatts.
- Monitor power loss compared to a reference level.
- **Auto CertiFiber Pro** and **Auto SimpliFiber Pro** modes let you monitor power and loss at two wavelengths when you use a CertiFiber™ Pro or SimpliFiber® Pro source.
- Save power and loss measurements for two wavelengths in one record.

Figure 133 shows the equipment for power meter measurements.

Notes

*It is not necessary to select a **Fiber Type** or **Test Limit** when you monitor power or loss. These tests do not have **PASS**/**FAIL** results.*

Power and loss measurements from sources that transmit network data can change as the data rate changes.

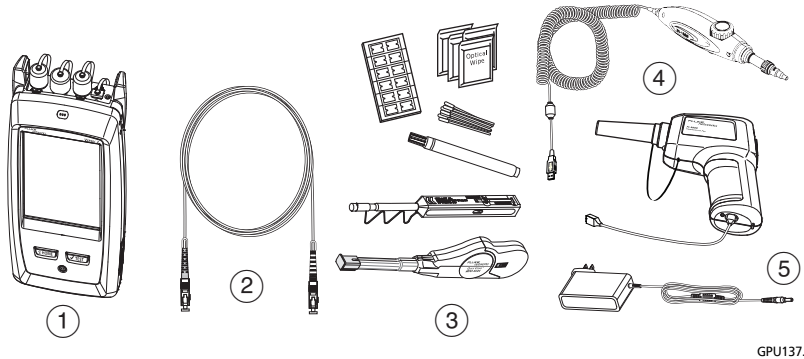

① Main tester with CertiFiber Pro module installed
② One test reference cord
③ Fiber cleaning supplies
④ FI-1000 or FI-3000 video probe with USB connector
⑤ AC adapter (optional)

Figure 133. Equipment for Power Meter Measurements

To monitor power

1. Clean and inspect the tester's input port and the connectors on the source and test reference cord.
2. Connect the tester to the source, as shown in Figure 134.
3. Turn on the source. On a CertiFiber Pro module, hold down the button adjacent to the VFL port for 3 seconds.
4. On the home screen, tap **TOOLS**, then tap **Power Meter / Light Source.**
5. The default mode for the power meter is **Auto CertiFiber Pro**. If the source is not a CertiFiber Pro tester, tap λ to select the correct mode.

Figure 135 shows the power meter and its controls.

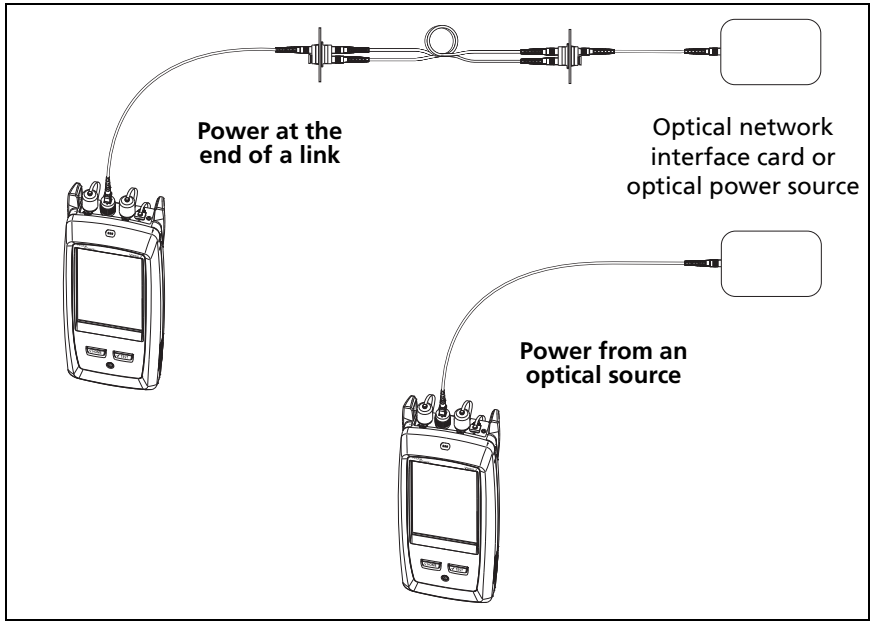

Figure 134. Connections to Monitor Power and Loss

To monitor loss

On the **POWER METER / LIGHT SOURCE** screen, tap **REF** to use the present power level as a reference. The meters show the difference between the reference power levels and the measured power levels.

To save the power and loss measurements

1 On the **POWER METER / LIGHT SOURCE** screen, tap **SAVE**.

2 On the **SAVE RESULT** screen, select **End 1** or **End 2**, make sure the **Cable ID** and **End** name are correct, then tap **SAVE**. Saved power meter results show these icons for **End 1** and **End 2**: PM2 PM1

The tester saves the present, minimum, maximum, and reference power and loss measurements for both wavelengths in one record.



GPU126.EPS

Figure 135. Power Meter Measurements and Controls

① The meters show the power levels received on the input port.

② This control shows when the meters measure absolute power. Tap the control to see the power measurement in **dBm** (decibels per milliwatt), **mW** (milliwatts), **µW** (microwatts), or **nW** (nanowatts).

③ To select a wavelength for the power meter, tap λ.

Use the **Auto CertiFiber Pro** and **Auto SimpliFiber Pro** modes only with a CertiFiber Pro or SimpliFiber Pro source. In these modes, the tester reads the wavelength identifiers transmitted by the source to know when to measure power at each wavelength.

④ To monitor power loss (⑨), tap **LOSS** or **REF**.

⑤ When you tap **REF**, the tester saves the present measurements as reference levels and the meters show power loss (⑨).

⑥ To save the power and loss measurements, tap **SAVE**.

⑦ To see the present, minimum, maximum, and reference power levels, tap a meter.

⑧ To set the minimum and maximum values to zero, tap **CLEAR MIN/MAX** in the **Min/Max/Ref** window.

⑨ When you tap **LOSS** (④), the meters show power loss. The loss is the difference between the reference power levels and the measured power levels.

⑩ To monitor absolute power, tap **POWER**.

How to Control the Light Source

When you do tests in Far End Source mode, you use the button on the module to turn on the remote's light source manually. You can also turn on the main tester's light source manually and use the main tester as an optical source.

Use the Display to Control the Main Tester's Light Source

1. Clean and inspect all connectors you will use.
2. Connect the tester's output port to the power meter.

   If your tester has a CertiFiber Pro Quad module installed, make sure you connect the fiber to the correct output port.
3. On the home screen tap **TOOLS**, tap **Power Meter / Light Source**, then select settings for the source. See Figure 136.

Use the Module's Button to Control the Light Source

The button next to the VFL port puts the output port in auto wavelength mode. In this mode, the port transmits both wavelengths (850 nm and 1300 nm or 1310 nm and 1550 nm). The signal includes identifiers that tell the meter when to measure power at each wavelength. Use this mode only with a CertiFiber Pro or SimpliFiber Pro power meter.

Note

The remote source always operates in auto wavelength mode.

1. Clean and inspect all connectors you will use.
2. Connect the tester's output port to the power meter.

   If your tester has a CertiFiber Pro Quad module installed, make sure you connect the fiber to the correct output port.
3. Hold down the button adjacent to the VFL port for 3 seconds.

   On CertiFiber Pro Quad modules, to turn on the single-mode source, press the button again.

   On a main tester used as a source, you can use the **POWER METER / LIGHT SOURCE** screen to select different settings for the source. See Figure 136.

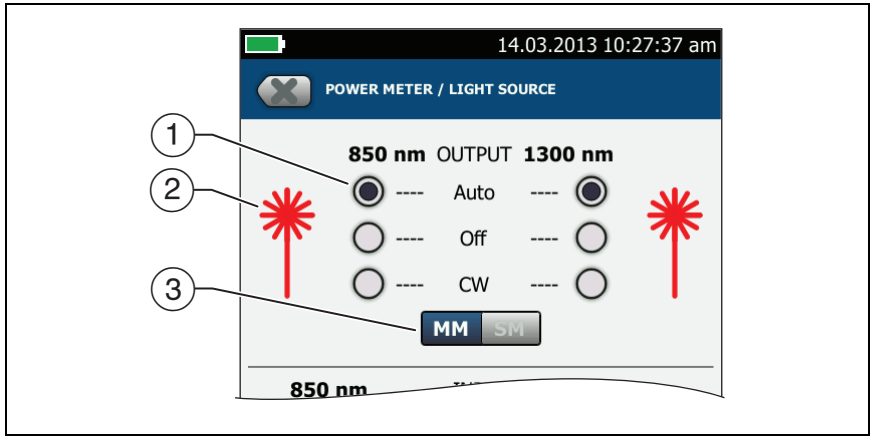

GPU127.EPS

Figure 136. Light Source Controls for the Main Tester

① Use the buttons to control the output port when you use the main tester as a light source:

- **Auto**: In this mode, the output port transmits both wavelengths. The signal includes identifiers that tell a CertiFiber Pro or SimpliFiber Pro power meter when to measure power at each wavelength. Use this mode only with a CertiFiber Pro or SimpliFiber Pro power meter.
- **Off**: The output port does not transmit the selected wavelength.
- **CW**: The output port transmits a continuous signal at one wavelength. Use this mode if the power meter is not a CertiFiber Pro or SimpliFiber Pro meter.

② The laser icon is red when the output port transmits the wavelength adjacent to the icon.

③ When the tester has a CertiFiber Pro Quad module installed, use this control to select multimode or single-mode wavelengths

Chapter 11: The OptiFiber Pro OTDR Module

Overview of the OTDR Module

⚠⚠⚠Warning

Before you use the OTDR module, read the safety information that starts on page 5.

The OptiFiber® Pro OTDR modules are Optical Time Domain Reflectometers that locate, identify, and measure reflective and loss events in multimode and single-mode fibers. Typical maximum test ranges are 35 km maximum at 1300 nm for multimode fiber and 130 km maximum at 1550 nm for single-mode fiber. The modules include these features:

- Automatic analysis of OTDR traces and events helps you identify and locate faults on multimode (850 nm and 1300 nm; 50 µm and 62.5 µm) and single-mode (1310 nm and 1550 nm) fiber.
- Shows OTDR results as an intuitive map of events, a table of events, and an OTDR trace.
- Automatic bi-directional averaging gives you more accurate loss measurements than measurements made in one direction.
- "Document Only" test limit is available if PASS/FAIL results are not necessary.
- Event editing function lets you edit loss events. See Chapter 13.
- Span function lets you limit OTDR results to a section of fiber that you define. See Chapter 13.
- SmartLoop™ test: One test gives you OTDR results for both fibers in a link.

- DataCenter OTDR™ test gives optimal performance when you do tests on fiber installations that have short links, many connections, and possibly large reflections.
- FaultMap™ test lets you make maps of your cable plant, see patch cords as short as 0.5 m, and see events that have poor reflectance.
- Visual fault locator helps you verify the continuity of fibers and locate faults in fibers and connectors.
- Optional video probe lets you inspect fiber endfaces and save the images in test reports.

OptiFiber Pro Connectors, Keys, and LEDs

Refer to Figure 137.

① LCD display with touchscreen.

② single-mode OTDR port with interchangeable SC adapter and protective cap. The LED in front of the port turns on when the port emits an optical signal.

⚠⚠Warning

Do not look directly into optical connectors. Some sources emit invisible radiation that can cause permanent damage your eyes.

⚠Caution

Do not connect APC (angled physical contact) connectors to the OTDR ports. An APC connector can damage the UPC fiber endface in the ports.

③ Multimode OTDR port with interchangeable SC adapter and protective cap. The LED in front of the port turns on when the port emits an optical signal.

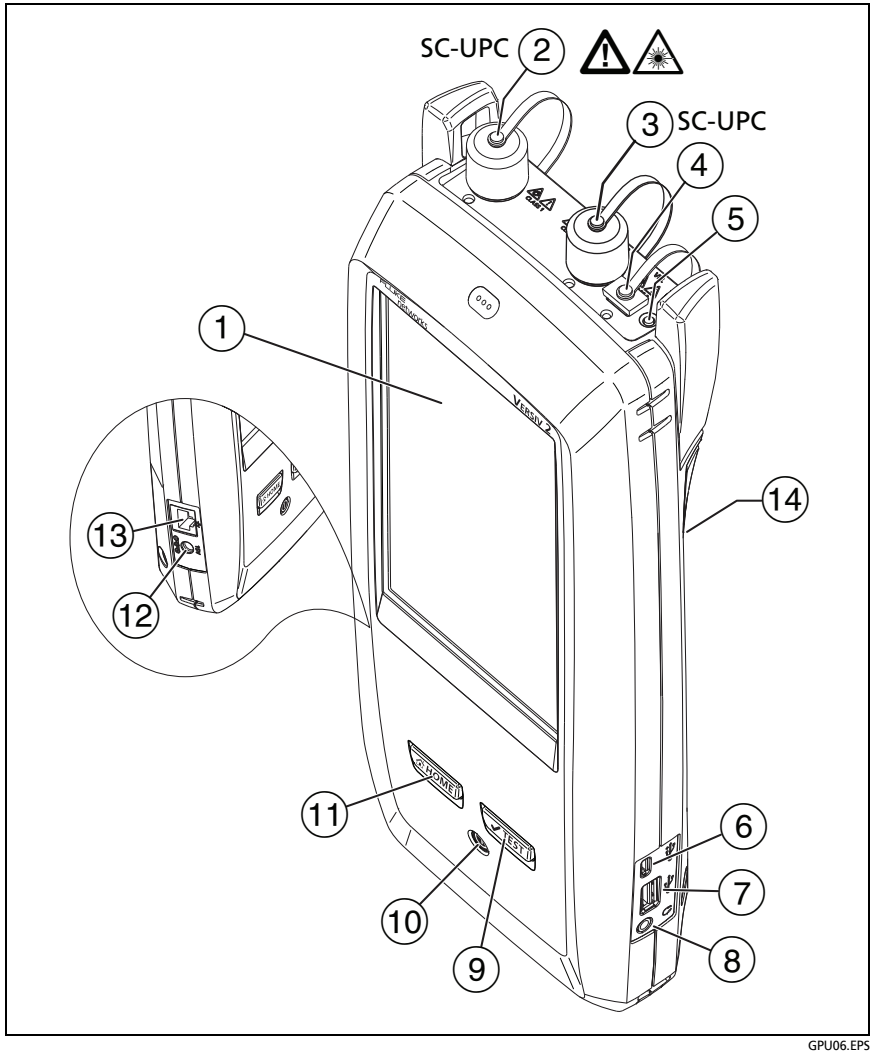

Figure 137. Main Versiv Tester with OptiFiber Pro OTDR Module (Versiv 2 with OptiFiber Pro Quad module shown)

④ Visual fault locator port and protective cap. The LED in front of the port turns on when the port emits an optical signal.

⑤ Button that controls the VFL.

⑥ Micro USB port: This USB port lets you connect the tester to a PC so you can upload test results to the PC and install software updates in the tester.

⑦ Type A USB port: This USB host port lets you save test results on a USB flash drive and connect the video probe to the tester. On a Versiv main tester, this port lets you connect a Wi-Fi adapter for access to Fluke Networks cloud services. (Versiv 2 testers have an internal Wi-Fi radio.)

⑧ Headset jack.

⑨ TEST: Starts a test. To start a test, you can also tap **TEST** on the display.

⑩ ⏻: Power button. Versiv 2: The LED in the power button shows the status of the battery charging process. See Table 2 on page 19.

⑪ HOME: Press HOME to go to the home screen.

⑫ Connector for the ac adapter. Versiv: The LED is red when the battery charges, and green when the battery is fully charged. The LED is yellow if the battery will not charge. See "Charge the Battery" on page 18.

⑬ RJ45 connector: Lets you connect to a network for access to Fluke Networks cloud services.

⑭ Decal with laser safety information:



How to Remove and Install the Connector Adapters

You can change the connector adapters on the OTDR ports of the modules to connect to SC, ST, LC, and FC fiber connectors. You can remove the adapter also to clean the fiber endface in the port. See Figure 138.

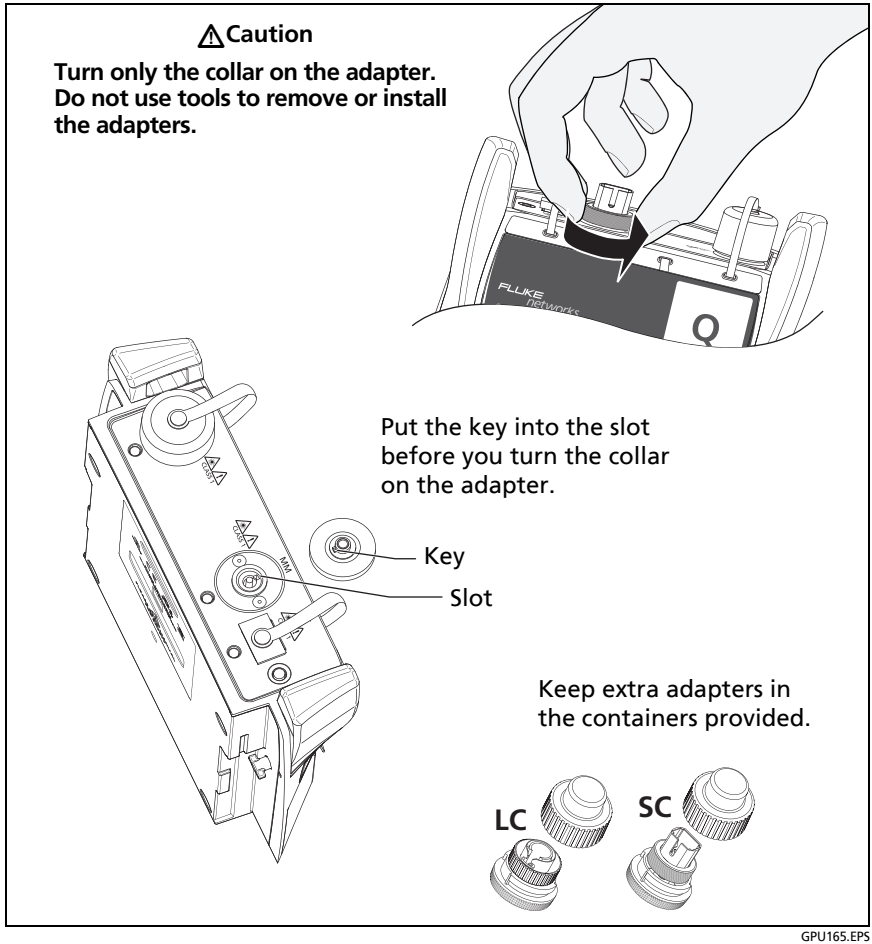

Figure 138. How to Remove and Install the Connector Adapters

The Home Screen for OptiFiber Pro Modules

The home screen (Figure 139) shows important test settings. Before you do a test, make sure these settings are correct.

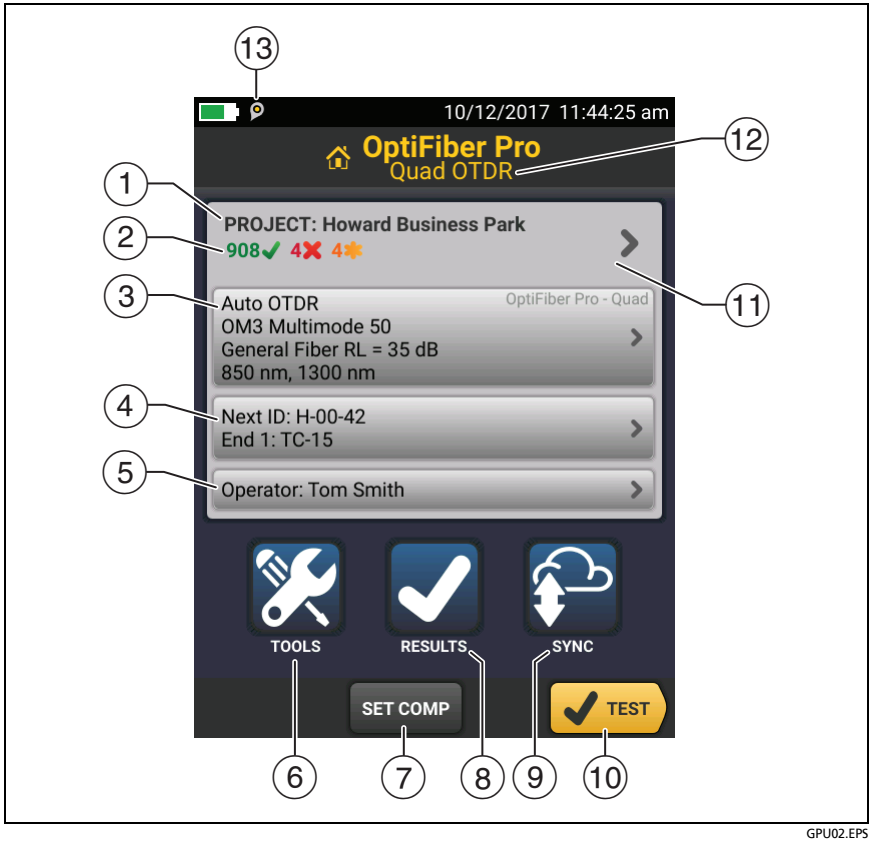

GPU02.EPS

Figure 139. The HOME Screen for OptiFiber Pro Modules

① **PROJECT**: The project contains the settings for a job and helps you monitor the status of a job. When you save test results, the tester puts them in the project. Tap the **PROJECT** panel to edit the project settings, select a different project, or make a new project.

② Shows a summary of the test results in the project:

✔: The number of tests that passed.

✘: The number of tests that failed.

③ The test setup panel shows the settings the tester will use when you tap **TEST** or press TEST.

To change these settings, tap the panel.

Note

You can set up tests for any module that the tester can use, even when no module is attached.

④ **Next ID**: The **Next ID** panel shows the ID that the tester gives to the next test results you save.

Tap **Next ID** to do these tasks:

- Enter an ID, select a different ID in the ID set, select a different set of IDs, or make a new set. The tester adds the IDs and ID sets you make to the project that shows on the home screen.
- Turn **Auto Save** on or off.
- Select **End 1** or **End 2** for OTDR and FiberInspector tests.
- Enter a name for **End 1** and **End 2**.

⑤ **Operator**: The name of the person who does the job. You can enter a maximum of 20 operator names. For each operator you can also enter the email address that the operator will use as an ID to sign in to LinkWare Live.

⑥ **TOOLS**: The **TOOLS** menu lets you set up the compensation function for the launch/tail cords, use tools such as the real-time trace and the FiberInspector test, see the status of the tester, and set user preferences such as the language and the display brightness.

⑦ **SET COMP**: Lets you select a launch method and set the lengths of launch and tail cords. See"About Launch and Tail Cords" on page 340.

⑧ **RESULTS**: Tap **RESULTS** to see and manage the results that are saved in the tester.

⑨ **SYNC**: To upload results to LinkWare Live, tap **SYNC**. See Chapter 18.

⑩ **TEST**: Tap **TEST** to do the test shown in the test setup panel.

⑪ **% Tested**: The percentage of the tests in the project that are completed. The tester uses the number of available IDs and the tests you selected on the **CABLE ID SETUP** screen to calculate this percentage. See Figure 208 on page 554. **% Tested** does not show if your project contains only a **Next ID** list. See "To Make ID Sets with International Characters" on page 581 for more information about the **Next ID** list.

⑫ The type of module attached to the tester.

⑬  The asset management icon shows when the owner of a LinkWare Live account has enabled the asset management service for the tester. See "Sign Your Tester Out of LinkWare Live" on page 597.

Settings for OTDR Tests

Table 12 gives descriptions of the settings for OTDR tests.

The Manual settings in Table 12 apply to these tests:

- **Manual OTDR**
- **SmartLoop OTDR (Manual)**

To set up a project, which includes the settings in Table 12, cable IDs, and operator names, see Chapter 17.

To set up an OTDR test

1 On the home screen, tap the test setup panel.

2 On the **CHANGE TEST** screen, tap an OTDR test to change, then tap **EDIT**.

Or to set up a new OTDR test, tap **NEW TEST**.

- If no module is installed, the **MODULE** screen shows. Tap the correct OptiFiber Pro module. Then on the **TEST TYPE** screen, tap a test.
- If the correct module does not show on the **TEST SETUP** screen, tap **Module**, then on the **MODULE** screen tap the correct OptiFiber Pro module.

3 On the **TEST SETUP** screen, tap the panels to change settings for the test. See Table 12.

4 On the **TEST SETUP** screen, tap **SAVE** when your test setup is completed.

5 On the **CHANGE TEST** screen, make sure the button next to the test is selected, then tap **USE SELECTED**.

Note

*For all **Test Types** except **FaultMap** and **FiberInspector**, you can use the **SETUP** button on the **TRACE** screen to change some OTDR settings manually after a test. See "How to Quickly Try Different OTDR Settings" on page 387.*

Table 12. Settings for OTDR Tests

Module	Select the OptiFiber Pro module you will use. To select a different module, tap the **Module** panel on the **TEST SETUP** screen, then tap a module.
Test Type	When you turn on the tester, the **Test Type** shows the test that was last selected. **Auto OTDR**: The tester automatically selects settings that give you the best view of the events on the cabling. This mode is the easiest to use and is the best choice for most applications. To see the settings the tester used for an **Auto OTDR** test, tap **SETTINGS** on the trace screen. *Note* *Some unusual faults can cause the **Auto OTDR** test to show an unsatisfactory trace. If this occurs, use the **Manual OTDR** test to get a better trace.* **Manual OTDR**: This mode lets you select settings to control the test parameters for the trace. See "The SmartLoop Test" on page 397 for details. **DataCenter OTDR**: This test is optimized for fiber installations that have short links, many connections, and the possibility of large reflections. The maximum range for this test is 1.2 km for multimode and 5 km for single-mode. For more details on DataCenter OTDR settings, see "OptiFiber Pro DataCenter OTDR Specifications" on page 657. *Notes* *By default, the **DataCenter OTDR** test uses 850 nm for multimode fiber and 1310 nm for single-mode fiber. These are the wavelengths typically used in data centers. You can select other wavelengths if necessary.* *If you use only one wavelength, the **Macrobend Detection** function will not identify bends.* *You must use launch compensation when you do a **DataCenter OTDR** test.* (continued)

Table 12. Settings for OTDR Tests (continued)

Test Type (continued)	**FaultMap**: The FaultMap test can show connections that do not show on the OTDR EventMap and connections that are poor because they have high reflectance. See "The SmartLoop Test" on page 397. **SmartLoop OTDR (Auto)** and **SmartLoop OTDR (Manual)**: The SmartLoop test lets you connect the far ends of the two fibers in a link so that one OTDR test gives you results for both fibers. The Auto and Manual settings operate the same as for the OTDR test. See "The SmartLoop Test" on page 397. **FiberInspector**: The FiberInspector test lets you use an optional FI-1000 FiberInspector or FI-3000/FI-3000-NW FiberInspector Pro video probe to inspect the endfaces in fiber optic connectors. See Chapter 8.
Manual OTDR Settings	This item shows only if you select **Manual OTDR** or **SmartLoop OTDR (Manual)** for the **Test Type**. Manual OTDR mode lets you select settings to control the test parameters for the trace.
Manual Settings: **Range**	The **Range** is the maximum distance shown on the trace. Select the range that is nearest to, but not less than, the distance to the event you want to examine. If the tester does not correctly identify the end event, select the next higher range, then do the OTDR test again. **Auto**: The tester selects a range that gives the best possible view of the events on the fiber. The range is not limited to the fixed ranges provided. For the manual SmartLoop OTDR test, the maximum range setting applies to the longest fiber in the pair, including the loopback and launch/tail fibers. The maximum settings are 20 km for multimode and 60 km for single-mode.

(continued)

Table 12. Settings for OTDR Tests (continued)

Manual Settings: **Pulse Width**	Adjust the pulse width to a wider setting to see farther down the fiber or to a narrower setting for better resolution. Narrower pulses let you see more detail in and around reflective events and help you see events that are close together (hidden events). But narrower pulses reduce the range of the OTDR and make traces that have more background noise between events. When you use narrower pulses, small loss events can possibly be hidden in the noise on the trace. Wider pulses increase the backscatter level, which gives a better signal-to-noise ratio around non-reflective events. This helps you see smaller loss events and measure their loss more accurately, but increases the dead zones of events. Wider pulses can also hide small reflections. **Auto**: The tester selects the narrowest pulse that still lets you see loss events. The averaging time is the time the tester uses to make measurements and calculate averages of the measurements. **Auto**: The tester adjusts the test settings to give a good view of events on the trace while it keeps the test time to a minimum. **Quick Test**: The tester adjusts the test settings to keep the test time to a minimum. This setting decreases accuracy, increases dead zones, and can give a trace that shows fewer details. Use this setting to do a test quickly when it is not necessary to see small details on the trace. A **Quick Test** can possibly take up to 3 minutes if the fiber length is near the maximum range for the tester for the selected pulse width. The **Quick Test** is not available for PON tests because PON links usually include splitters and so usually require long averaging times to get good results.

Table 12. Settings for OTDR Tests (continued)

Manual Settings: **Averaging Time**	**Best Resolution**: The tester adjusts the test settings to keep dead zones to a minimum. This setting lets you see more events in and around reflective events. The test usually takes longer than a test with **Auto** or **Quick Test** selected. Tests with **Auto** or **Best Resolution** selected can take up to 3 minutes per wavelength for some fibers. **3, 5, 10, 20, 40, 60, 90, 120,** and **180 seconds per wavelength**: Longer times give these results: • The trace has less noise, which increases the dynamic range and increases the accuracy of measurements. • You can see small events, such as splices, more clearly on the trace. • The tester makes more measurements, so the test takes more time. Shorter times give these results: • The trace has more noise, which decreases the dynamic range. • The increased noise hides small events on the trace. • The tester makes fewer measurements, so the test takes less time.
Manual Settings: **End Threshold**	Lets you set the threshold (in decibels) for detection of the end of the fiber. An event that is above the threshold is shown as the end of the fiber. The range for this setting is 1 dB to 25 dB inclusive. To set the threshold to **Auto**, tap **Auto** on the **END THRESHOLD** screen. For the SmartLoop OTDR test, the **End Threshold** is for unconnected end of the tail fiber (not for each fiber).

(continued)

Table 12. Settings for OTDR Tests (continued)

Manual Settings: **Loss Threshold**	Lets you set the threshold (in decibels) for loss (non-reflective) events. Events at or above the threshold are included in the event table. The range for this setting is 0.01 dB to 1.50 dB inclusive. When you select smaller threshold values (0.01 dB to 0.3 dB), the tester makes a trace with less noise. To do this, the tester makes more measurements to be averaged or uses wider pulse widths. Thus, smaller values can possibly increase test times or dead zones. **Auto** sets the threshold to a value based on the selected test limit, usually 0.10 dB. To set the threshold to **Auto**, tap **Auto** on the **LOSS THRESHOLD** screen. *Notes* *When you set a loss threshold, you cannot be sure that the tester will find all events that are at or above the threshold. The characteristics of the fiber and the use of a manual **Averaging Time** or **Pulse Width** can possibly reduce the number of events the tester finds.* *If you set the loss threshold to less than 0.1 dB, the tester can possibly find many false events caused by imperfections in the fiber.*
Manual Settings: **Macrobend Setup**	Enter the threshold for the difference in an event's loss between the two wavelengths shown. To identify a loss event as a bend, the tester compares the event's loss at two wavelengths, such as 1310 nm and 1550 nm. If the loss is more at the longer wavelength and is more than the macrobend threshold, the tester identifies the event as a bend. The default threshold for the loss difference is 0.50 dB. To use the bend detection function, make sure that **Macrobend Detection** on the **TEST SETUP** screen is set to **On**. *Note* *Macrobend detection is available only for single-mode fibers.*

Table 12. Settings for OTDR Tests (continued)

Bi-directional	This setting shows only if you select **SmartLoop OTDR (Auto)** or **SmartLoop OTDR (Manual)** for the **Test Type**. **Off**: The tester does the SmartLoop test in only one direction. **On**: The tester does the SmartLoop test in both directions and automatically calculates bi-directional averages of loss. See "Bi-directional SmartLoop Tests" on page 404.
Launch Compensation	Tap the control to turn the launch compensation function on or off. See"About Launch and Tail Cords" on page 340. This setting does not show for the SmartLoop test because it is always enabled for that test.
Macrobend Detection (single-mode only)	**On**: The tester identifies bends. To identify a loss event as a bend, the tester compares the event's loss at two wavelengths, such as 1310 nm and 1550 nm. If the loss is more at the longer wavelength and is more than the macrobend threshold, the tester identifies the event as a bend. This setting is **On** by default. For the **Auto OTDR** test, the threshold for the loss difference is 0.50 dB. To use a different threshold, set up a **Manual OTDR** test. See "Macrobend Setup" above. *Notes* *A bend always causes a **FAIL** result. If you want a **PASS** result for a link that has a bend, turn off **Macrobend Detection**.* **Off**: The tester does not identify bends. Bends show as loss events in the results.
Wavelength	Select the wavelengths you want to use. You can do tests at one or all of the wavelengths supported by the module you selected. The **FaultMap** and **FiberInspector** tests do not have this setting. *Note* *If you use only one wavelength, the **Macrobend Detection** function will not identify bends.*

(continued)

Table 12. Settings for OTDR Tests (continued)

Fiber Type	Select a fiber type that is correct for the type you will test. To see a different group of fiber types, tap **MORE**, then tap a group. To make a custom fiber type, see Chapter 19.
Fiber Type Settings	**IOR**: The tester uses the index of refraction to calculate the optical length of the fiber. Optical length usually differs slightly from the length of the fiber jackets in a link. This occurs because fibers are often curved inside their jackets and because there are small variations in the IOR of the fibers. Each fiber type includes a default value, which is the IOR specified for the fiber by the manufacturer. To use a different IOR, make a custom fiber type. See Chapter 19. *Note* *If you use a length-based test limit, the* **IOR** *value has an effect on the loss limit that the tester calculates. See "OTDR Settings for Limits that Calculate a Loss Limit" on page 339.*
Fiber Type Settings (cont.)	**Backscatter**: Backscatter is the backscatter coefficient. This is a measurement of the quantity of light that the fiber reflects back to the OTDR when the OTDR uses a 1 ns pulse. The tester uses this value to calculate the reflectance of events for OTDR tests and the overall ORL for the link. Each fiber type includes a default value, which is the backscatter coefficient specified for the fiber by the manufacturer. To use a different backscatter value, make a custom fiber type. See Chapter 19.

(continued)

Table 12. Settings for OTDR Tests (continued)

Test Limit	Select the correct test limit for the job. Generic limits, such as **General Fiber Optic** and **Document Only**, let you do tests when no industry-standard limit is applicable and you do not want to make a custom limit. These limits are in the **Miscellaneous** group. To see a different group of limits, tap **MORE**, then tap the name of a group. To make a custom test limit, see Chapter 19. Some test limits use the measured length of the fiber to calculate a limit for loss. See "OTDR Settings for Limits that Calculate a Loss Limit" on page 339.
Test Limit Settings	This item shows only if the selected test limit calculates a loss limit for each link. For such limits, enter the number of connectors and splices in the link. See Table 13 on page 340.

OTDR Settings for Limits that Calculate a Loss Limit

Some test limits do not specify a limit for overall loss. They specify maximum values of loss per kilometer of fiber and for the connectors and splices in the link. Then, the tester uses the measured length of the link, the number of connectors in the link, and the number of splices in the link to calculate a loss limit for that link.

When you select such a limit, you must enter the number of connectors and splices that are in the link. To enter these values, tap **Test Limit Settings** on the **TEST SETUP** screen. See Table 13.

Note

***Test Limit Settings** shows on the **TEST SETUP** screen only if the selected test limit calculates a loss limit for each link. For example, **Test Limit Settings** shows when you select the limit ISO/IEC 14763-3.*

Table 13. Settings for Test Limits that Use Length to Calculate a Loss Limit

Number of Connectors*	Enter the number of connectors that are in the link. If you do not use launch and tail cords, do not include the first and last connectors. If you use only a launch cord, include the first connector, but not the last connector.
Number of Splices*	Enter the number of splices that are in the link.

* For the SmartLoop OTDR test, the settings apply to each fiber in the link. Enter the number of connectors and splices for one of the fibers in the link. For example, if there are no connectors between the launch and loopback fibers, the **Number of Connectors** is 2.

About Launch and Tail Cords

Launch and tail cords let the tester measure the loss and reflectance of the first and last connectors in the cabling and also include them in the measurement of overall loss. Without launch and tail cords, no backscatter is available before the first connector nor after the last. To measure the properties of a connector, the tester must measure the backscatter before and after the connector.

The launch cord also lets the you see events that are close to the OTDR. Without a launch fiber, those events can be hidden by the large reflection caused by the OTDR's port.

Fluke Networks recommends that you use launch and tail cords. You should also use the launch/tail cord compensation function to remove the lengths and attenuation of these fibers from the OTDR measurements.

If you select a test limit that requires you to use launch and tail cords, the tester shows a warning message when you try to do an OTDR test without launch and tail cords.

⚠Caution

- **For tests on cabling that has angled physical contact (APC) connectors, use only launch/tail cords that have APC connectors at the ends connected to the cabling. Other connector types cause large reflections that can cause unreliable test results.**
- **Make sure the end of the launch cord you connect to the OTDR port has the correct type of connector, UPC or APC, for the OTDR module. OptiFiber Pro modules have UPC ports. OptiFiber Pro HDR modules have APC ports. Connecting the wrong type of connector can damage the OTDR port, and the large reflection at the OTDR port can cause unreliable test results.**
- **To help make sure the tester can find the Tail event when you do tests on fibers with APC connectors, use a tail cord that is terminated with a non-APC connector at the far end.**

Notes

Do not use hybrid patch cords to connect the launch or tail cords to the cabling under test. Use launch and tail cords with the correct connectors to connect directly to the cabling under test. This gives the best measurement of the first and last connectors in the link. Launch and tail cords with different types of connectors are available from Fluke Networks.

The style of the case for your launch/tail cords can be different from the cords shown in this manual.

How To Compensate for Launch and Tail Cords

The launch compensation function lets you specify the lengths of the launch and tail cords. The OTDR can then remove the losses, lengths, and attenuation coefficients of the launch and tail cords from overall OTDR results. It does not remove the losses of the connections at the launch and tail cords.

Launch compensation also gives a more accurate ORL (optical return loss) measurement if you entered the correct backscatter coefficient for the fiber you will test.

Methods of Launch Compensation

The tester has four methods of compensation:

- **Launch Only:** Does an OTDR test to find the end of the launch cord.
- **Launch + Tail:** Does an OTDR test to find the ends of the launch cord and tail cords.
- **Launch + Fiber + Tail:** Use this method for links that have different connectors on the near and far ends of the fiber.
- **Manual Entry (APC)**: Lets you enter the lengths of the launch and tail cords without doing an OTDR test to find the ends of the cords. See "How To Enter Lengths Manually" on page 348.

  When you use launch/tail cords that have connectors with low reflectance, such as APC connectors, the tester possibly will not find the correct launch and tail events. If this occurs, enter the lengths of the cords manually.

  Note

  ***Launch + Tail** compensation usually gives the most accurate measurements.*

How to Set Up the Launch Compensation Function

1. Select launch and tail cords that have the same type of fiber as the fiber you will test.
2. On the home screen, tap the test setup panel. On the **CHANGE TEST** screen, select an OTDR test to change, then tap **EDIT**. Or to set up a new OTDR test, tap **NEW TEST** then tap **Auto OTDR**, **Manual OTDR**, or **DataCenter OTDR**.
3. On the **TEST SETUP** screen, tap the **Launch Compensation** control to set it to **On**.
4. On the **TEST SETUP** screen, make sure the **Fiber Type** is correct. Change it if necessary.
5. On the **TEST SETUP** screen, tap **SAVE**.
6. On the home screen, tap **SET COMP**.
7. On the **SET LAUNCH METHOD** screen tap the type of compensation you want to do. For descriptions of the methods, see “Methods of Launch Compensation” on page 342.
8. Clean and inspect the OTDR port and the launch/tail cord connectors.
9. Make the connections for the type of compensation you selected, as shown on the **SET LAUNCH METHOD** screen. See Figures 140, 141, and 142.
10. Tap **SET**.
11. When the **SET LAUNCH COMP** screen shows, select the event or events that are the end of the launch cord and the start of the tail cord (if you used a tail cord). When you do **Launch + Tail** compensation, the end of the launch cord and the start of the tail cord are the same event. See Figure 143.
12. Tap **SAVE**.

Figure 157 shows an example of an OTDR trace with launch and tail markers enabled.

Note

If you change the launch or tail cord, do the compensation procedure again.

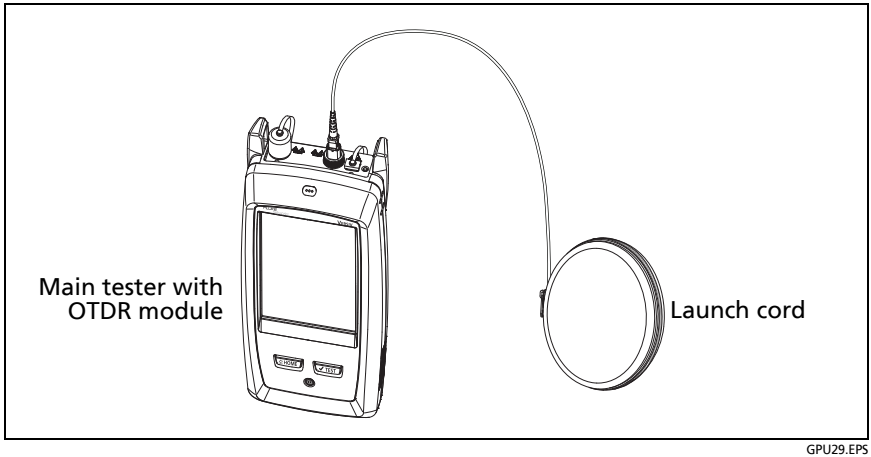

Figure 140. Connections for Launch Only Compensation

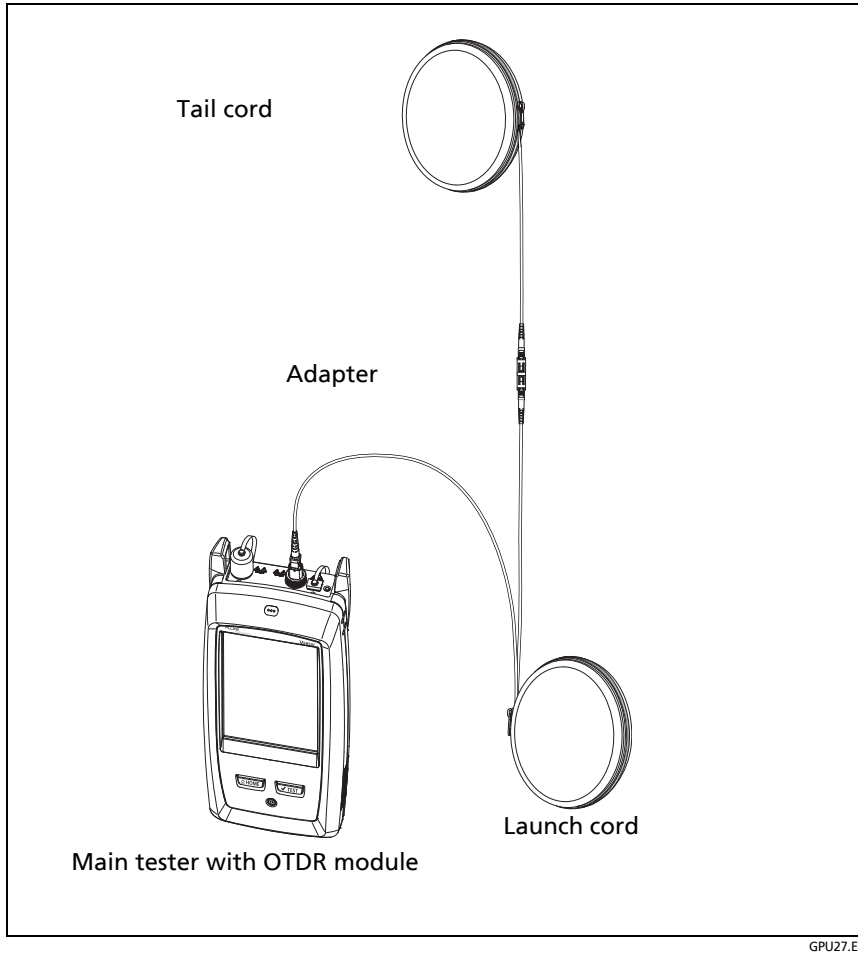

Figure 141. Connections for Launch + Tail Compensation

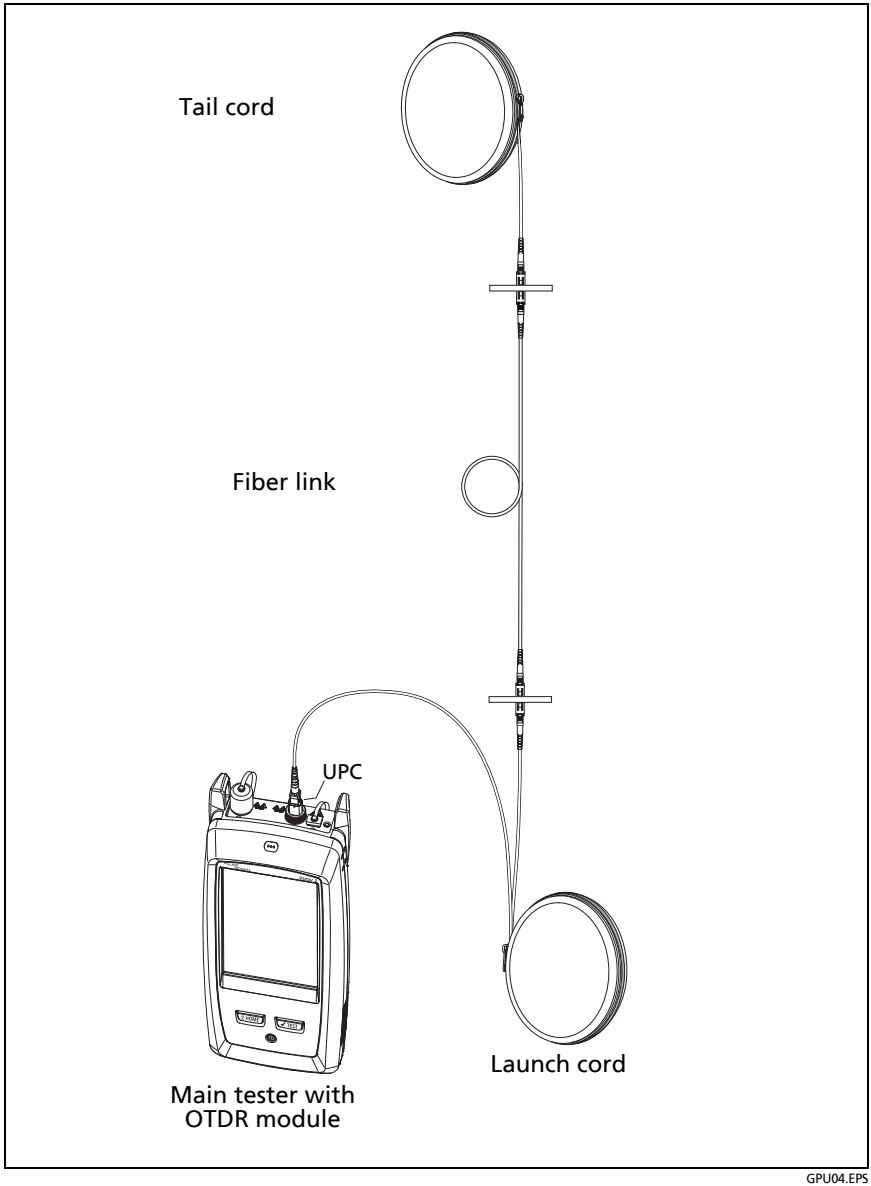

GPU04.EPS

Figure 142. Connections for Launch + Fiber + Tail Compensation

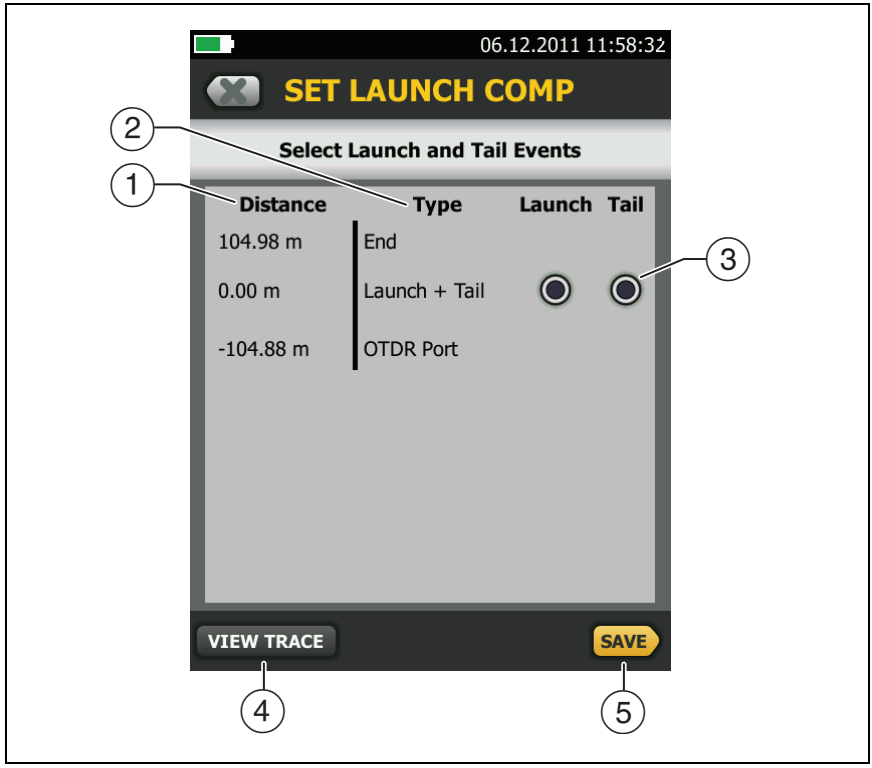

GPU23.EPS

Figure 143. SET LAUNCH COMP Screen

① The distance to the event.

② The type of event. The tester looks for **Launch** and **Tail** events approximately 100 m to 1 km from the fiber ends for multimode fiber, and approximately 130 m to 3 km from the fiber ends for single-mode fiber.

③ Select one event in the **Launch** column and one event in the **Tail** column to be the launch and tail events.

: When the tester finds other events, it shows gray buttons for events that you cannot select as a launch or tail event. For example, all events after the **Launch + Tail** event have gray buttons in the **Launch** column, and all events before that have gray buttons in **Tail** column.

④ To see the OTDR trace for the events on this screen, tap **View Trace**.

⑤ Tap **SAVE** to save your settings.

How To Enter Lengths Manually

When you use launch and tail cords that have APC connectors, it is possible that the tester will not find the connectors when you try to set up the launch compensation function. If this occurs, enter the lengths of the launch and tail cords manually.

You can also use the manual-entry method when you do not have an adapter to connect the launch and tail cords together.

To enter the launch and tail cord lengths manually

1 On the home screen, tap the **TOOLS** icon, then tap **Set Launch Compensation**.

Note

Set Launch Compensation *shows on the* ***TOOLS*** *menu only when an OTDR module is installed.*

2 Tap **Manual Entry,** then tap **SET**.

3 Tap **Launch Cord**, use the keyboard to enter the length of the launch cord, then tap **DONE**.

Note

You cannot enter a length less than 120.0 m (393.7 ft) for a single-mode launch cord or 90 m (295 ft) for a multimode launch cord.

4 If you will use a tail cord, tap **Tail Cord**, use the keyboard to enter the length of the tail cord, then tap **DONE**.

How To See the Launch Compensation Settings

1 On the home screen, tap the **TOOLS** icon, then tap **Set Launch Compensation**.

2 The **SET LAUNCH METHOD** screen shows the launch compensation settings.

About Virtual Launch and Tail Events

If launch compensation is on, and the tester does not find a launch event when you do an OTDR test, the tester adds one at the location specified in the launch compensation settings. These are called virtual events. This function lets you use launch cords that have low-reflectance connectors, such as APC connectors, at the end you connect to the link. Because these connectors make very small reflections or show as loss events, the tester possibly will not find the launch event when you use such cords.

If the tester cannot find the launch and tail event when you set up the launch compensation function, enter the lengths of the cords manually.

If you enter the launch and tail cord lengths manually, and the tester does not find a tail event at the location you specified, it adds a tail event at that location. This function lets you use tail cords that have low-reflectance connectors, such as APC connectors, at the end of the link.

If launch compensation is on, and the tester does not find a launch event when you do an OTDR test (within about 4 meters of the expected location; within 0.5 meters if using manual entry), the tester adds one at the location specified in the launch compensation settings.

Added launch and tail events show on the EventMap and in the event table and have 0 dB reflectance. The OTDR trace shows the launch and tail event markers (orange, dashed lines) at the locations shown on the EventMap and event table. The tester shows a warning when it adds a launch or tail event.

Some conditions can possibly prevent the tester from adding a tail event:

- The link is shorter than the tail cord.
- The end event does not show at the same location for both wavelengths.
- The reflectance of the end event is less than -20 dB.
- There are events after the end of the link.

How to Prevent Damage to the Launch Cord Connectors

When you do not use a launch cord, keep the connectors attached to the case or inside the case. See Figure 144.

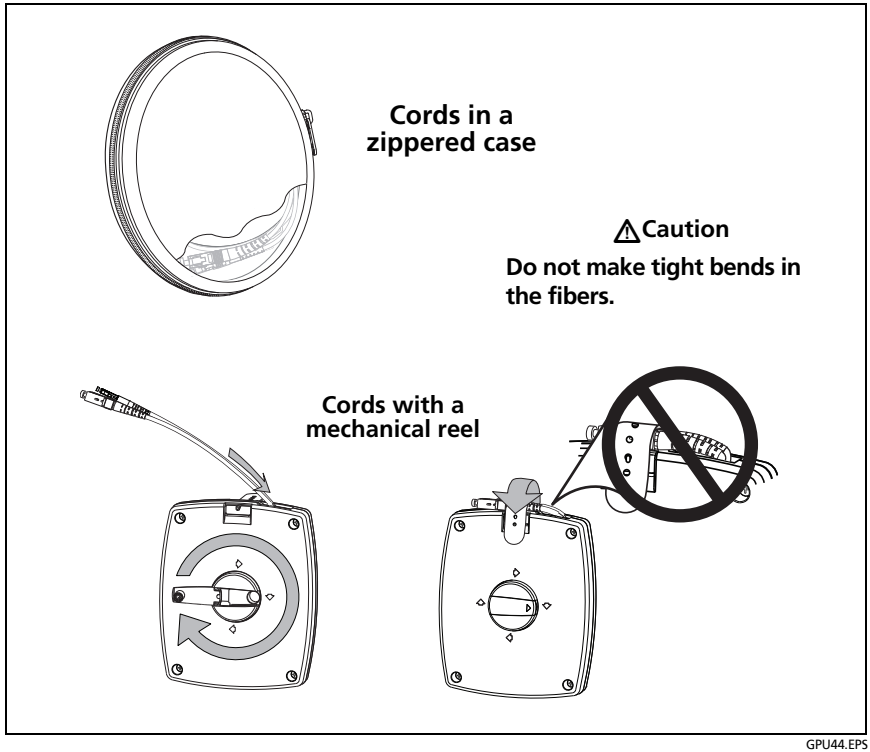

Figure 144. How to Prevent Damage to the Launch Cord Connectors

How to Hang the Launch Cords

The optional TPAK magnet and strap let you hang the launch cords from metal surfaces (Figure 145).

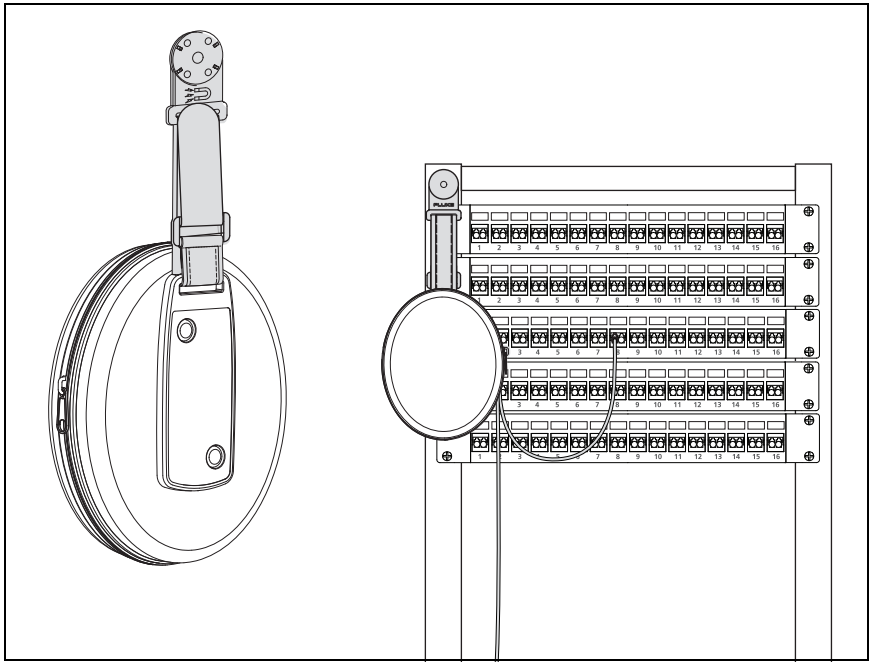

Figure 145. How to Use the Optional TPAK Magnetic Hanger

OTDR Port Connection Quality

When you do an OTDR test, the test shows the quality of the OTDR port connection (Figure 146). If a test takes more than approximately 3 seconds, the **PROGRESS** screen also shows a preview of the OTDR trace. The trace is black for one wavelength and blue for the other wavelength.

If the Gauge is Not in the Good Range

- Clean the OTDR port and the fiber connector. Use a video probe to inspect the endfaces in the port and fiber connector for scratches and other damage. If an endface on the tester shows damage, contact Fluke Networks for service information.
- If the gauge stays outside the **Good** range, remove the adapter from the module and inspect the adapter for damage. Make sure that the white plastic ring inside the center tube shows no damage.

A poor OTDR connection increases the dead zone at the connector. The dead zone can hide faults that are near the OTDR connector.

A poor connection also decreases the strength of the signal from the OTDR. The weaker signal causes more noise on the trace, which can cause the OTDR to miss events. It also decreases the dynamic range.

When the test is completed, the quality gauge shows in the details for the **OTDR Port** event on the EventMap screens. The tester includes the gauge with the test results you save.

Port Connection Quality for SmartLoop Tests

For SmartLoop tests, the **OTDR Port** connection for the second fiber is the input connector of the loopback cord. See Figures 164 on page 402 and 166 on page 409. If the tester shows a message about the connection quality of the OTDR port, but the OTDR connection on the tester is good, inspect the ends of the loopback cord.

"STOP" Button for Manual Tests

When a trace shows on the **PROGRESS** screen for a manual OTDR test with multiple wavelengths, you can tap the **STOP** button to stop the OTDR test at the current wavelength and start the test at the next wavelength. This lets you control the time the tester takes to give OTDR results. You can stop the test to get results more quickly, but the results are possibly less accurate.

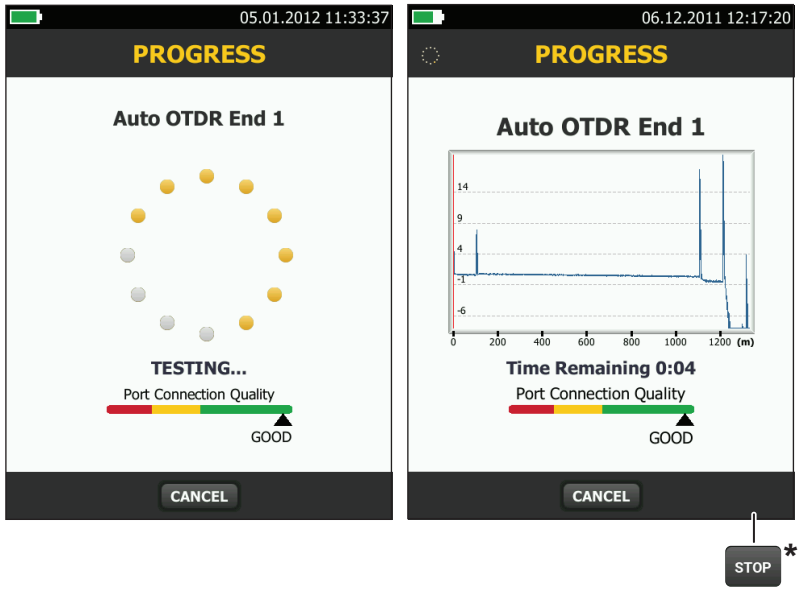

* Shows during **Manual OTDR** tests.

GPU17.EPS

Figure 146. The OTDR Port Connection Quality Gauge and Progress Screen

How to Do an OTDR Test

Figure 147 shows the equipment for OTDR tests.

1. Make sure that the home screen shows the correct settings for the job.
2. Set up the launch compensation function. See page 343.
3. Clean and inspect the connectors on the launch and tail cords and the fiber to be tested.
4. Connect the tester to the link as shown in Figure 148, 149, or 150.
5. Tap **TEST** or press TEST.

Note

The tester shows a warning if there is an optical signal on the fiber.

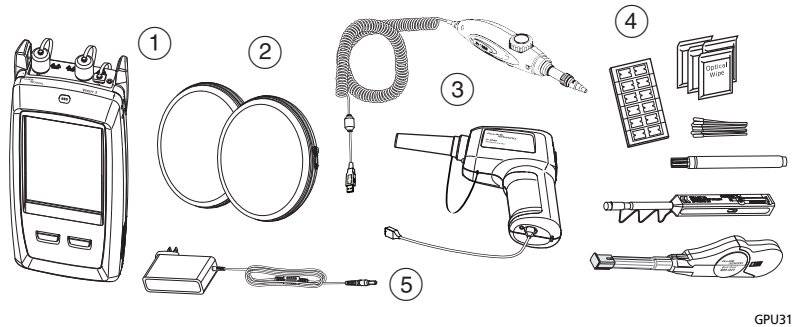

1. Main tester with OTDR module installed
2. Launch and tail cords (match the fiber to be tested)
3. FI-1000 or FI-3000 video probe with USB connector
4. Fiber cleaning supplies
5. AC adapter (optional)

Figure 147. Equipment for OTDR Tests

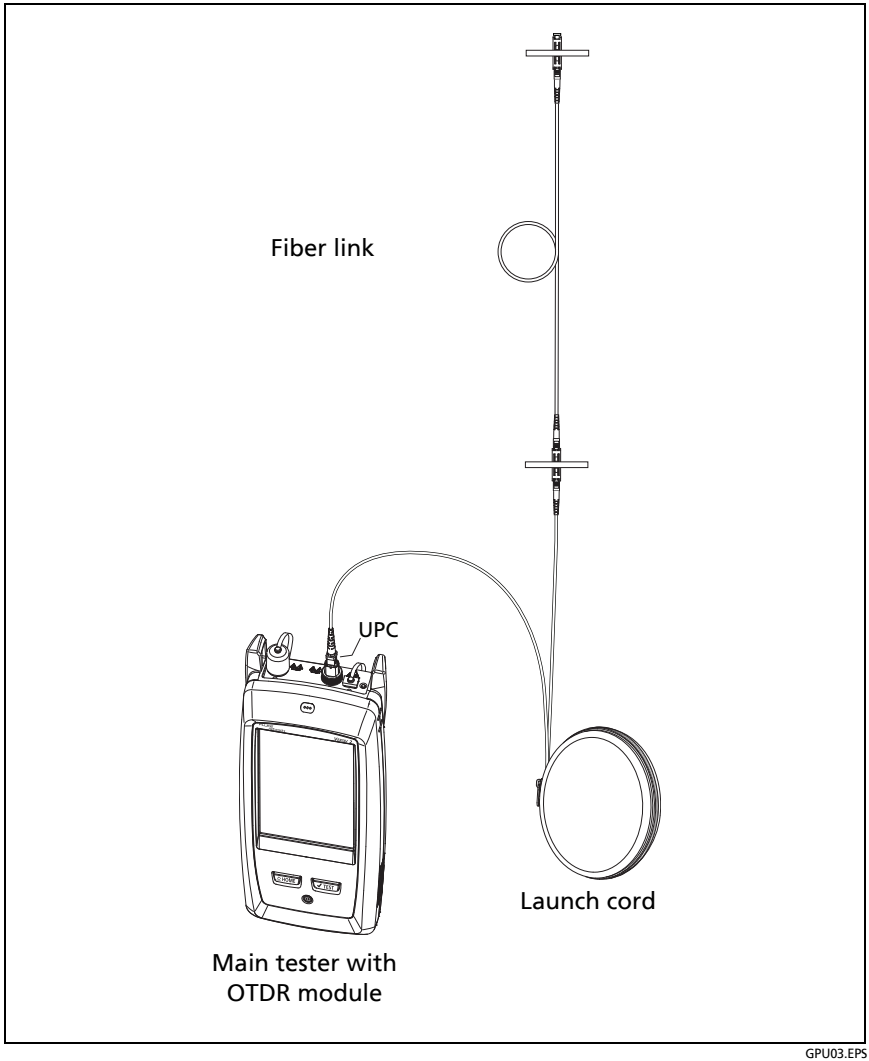

Figure 148. OTDR Connected with a Launch Cord

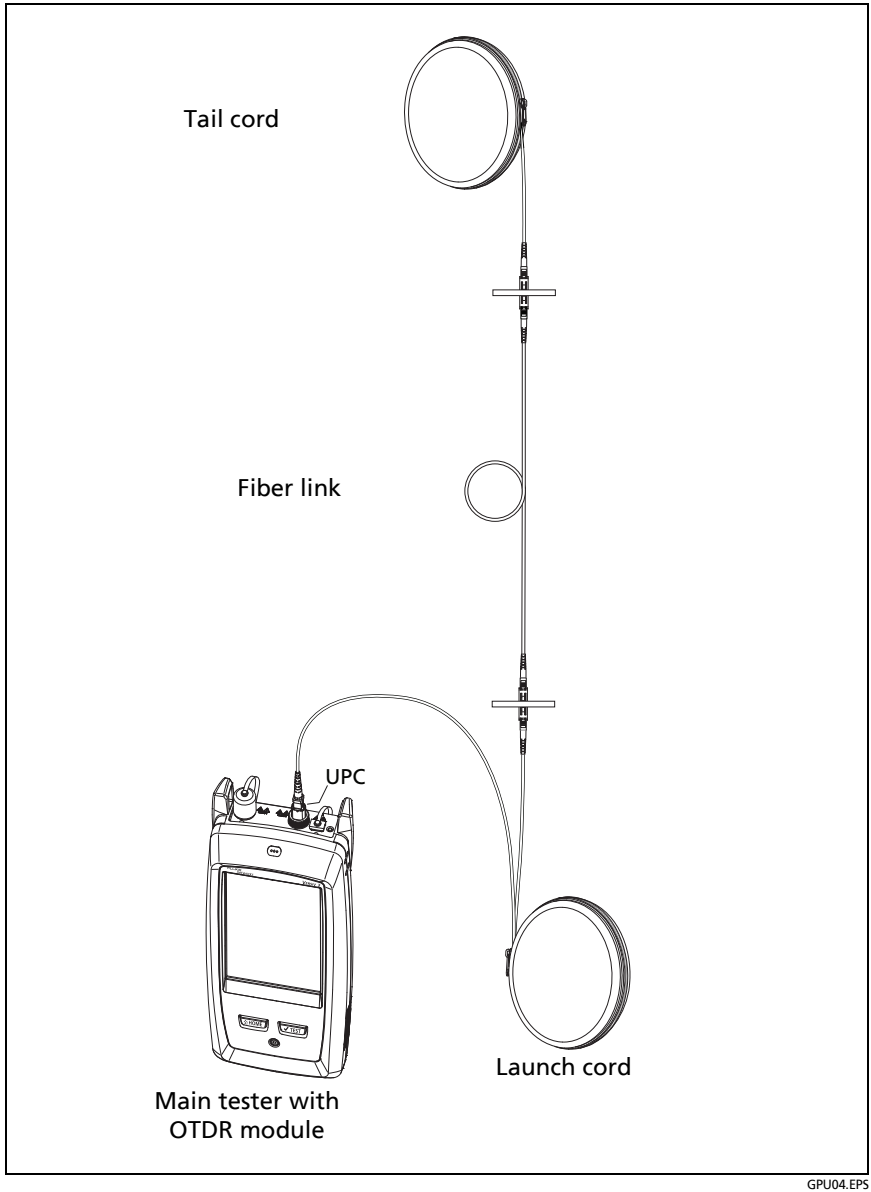

Figure 149. OTDR Connected with Launch and Tail Cords

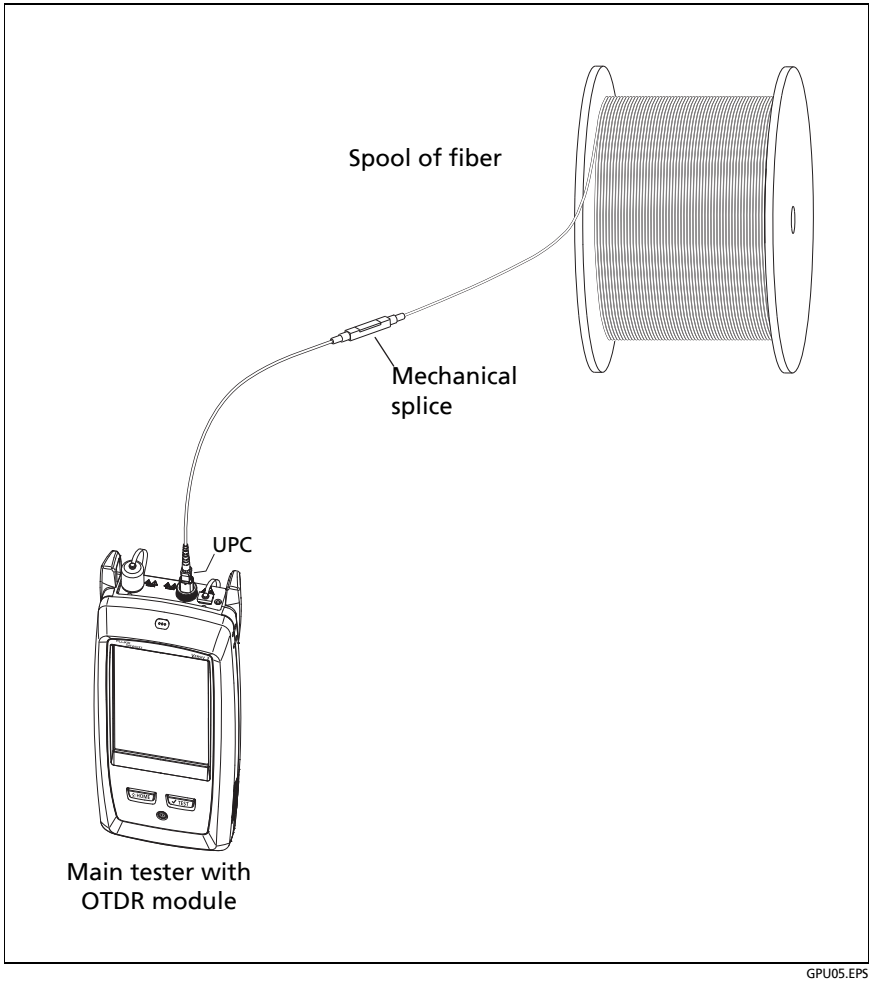

Figure 150. OTDR Connected to a Spool of Fiber

OTDR Results

Notes

The tester shows measurements with ">" or "<" when the actual value is possibly more or less than the value shown. For example, this can occur for hidden events or for measurements that are out of the range of the tester.

*When a test is completed, the type of screen the tester shows first (**EventMap**, **TABLE**, or **TRACE**) is the type you looked at last.*

EventMap

The EventMap shows a diagram of the events on the fiber. Figures 151 and 152 show examples of the EventMap. For more information on events, see Table 14 on page 368.

Notes

The EventMap combines the results for all wavelengths used for the test. If an event on the EventMap does not show on the OTDR trace, change the wavelength on the OTDR screen.

The EventMap does not show ghosts.

① The ID for the results. If **Auto Save** is off, **Result not saved** shows.

② The end of the fiber.

③ The length of the fiber segment between two events.

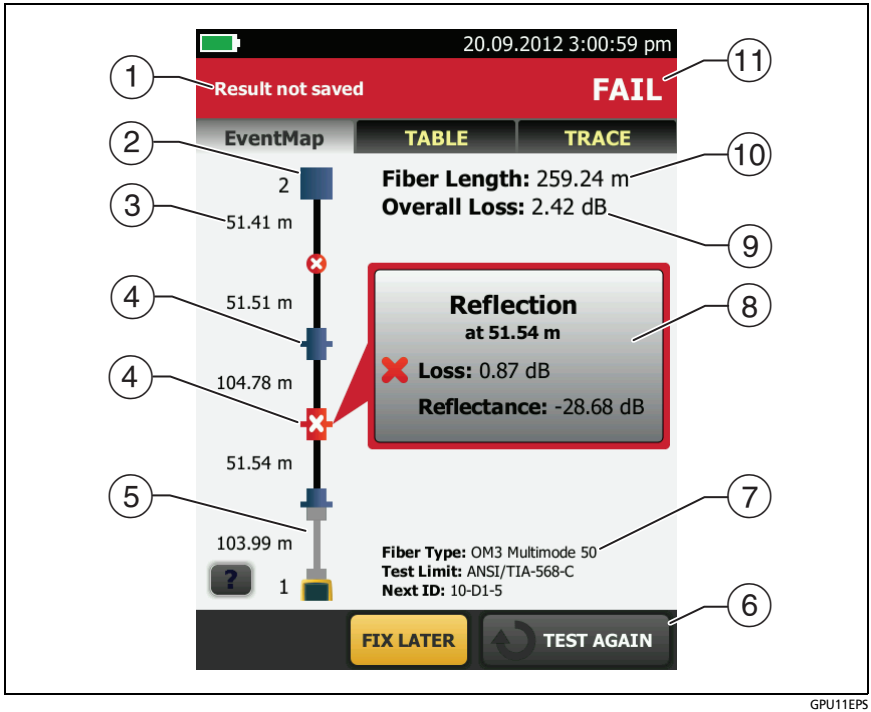

GPU11EPS

Figure 151. EventMap Example 1

④ A reflective event:

: A reflective event, which is usually a connector. Measurements for the event are all within the test limits.

: One or more measurements for the event exceeds the limit. This event could also be a **Ghost Source**.

⑤ : Launch and tail cords and their connectors show in gray. The map shows these if **Launch Compensation** is on and the cords are connected.

: The arrow icon shows when there are more events that do not show on the screen. To see the events, tap the icon or scroll the map.

⑥ When more than one button shows at the bottom of the screen, the tester highlights one in yellow to recommend which one to tap. See "Buttons to Do Tests and Save Results" on page 63.

⑦ The fiber type and test limit the tester used for the test, and the ID the tester will use for the next results that you save.

⑧ When a test is completed, the window shows information for the event that has the worst measurement. The information windows show the worst results of the wavelengths used for the test.

If the window border is green, the measurements for the event do not exceed the limits.

If the window border is red, a measurement exceeds the limits.

If the window border is blue, the tester does not give a pass or fail result to the event because it cannot do a full analysis of the event. This occurs for **OTDR Port**, **Hidden**, and **End** events. This occurs for all events if you use the **Document Only** test limit because **Document Only** does not have values for limits.

When you use a test limit that has a reflectance limit, **Hidden** events show a fail status if their reflectance exceeds the limit.

: The measurement exceeds the limit.

: The measurement is within the limit.

To see details for the event, tap the window. See Figure 155 on page 377.

To see information for another event, tap another icon on the map.

Note

Events before the launch cord connector and after the tail cord connector do not have a pass or fail status.

⑨ **Overall Loss**: The loss of the cabling. This does not include the OTDR connection and the loss of the last event. If **Launch Compensation** is on, the overall loss includes the launch and tail connectors, but not the launch and tail fibers.

If you did the test at two wavelengths, the tester shows the highest loss of the two wavelengths.

N/A shows for the **Overall Loss** if the tester cannot measure the loss. This can occur when events are too close together or when there is a large reflective event near the end of the fiber.

⑩ **Fiber Length**: The length of the fiber. The units show in meters (**m**) or feet (**ft**). If **Launch Compensation** is on, the length does not include the length of the launch and tail cords.

⑪ **PASS/FAIL**: The overall result for the fiber.

- **PASS**: All measurements are within the test limits.
- **FAIL**: One or more measurements exceed the limit.

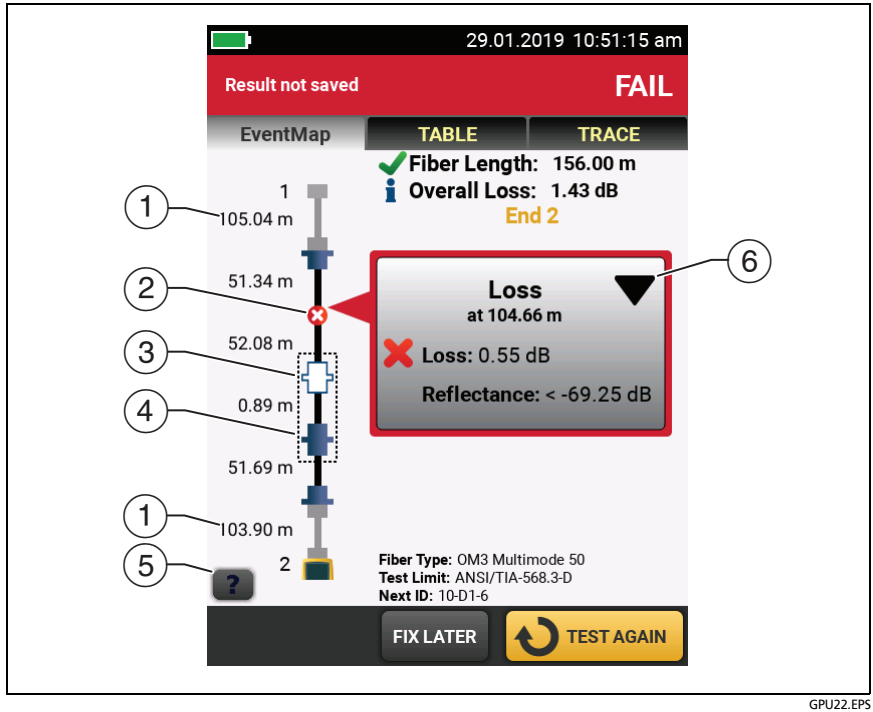

GPU22.EPS

Figure 152. EventMap Example 2

① Length of the tail cord (top) and launch cord (bottom).

② A non-reflective loss event:

: An APC connector or a splice. Measurements for the event are all within the test limits. If the event has negative loss, it is a **Gainer**. See page 372.

If **Macrobend Detection** is **Off**, this could be a bend. If the event is a bend, and **Macrobend Detection** is **On**, the EventMap shows the bend icon. Macrobend detection is available only for single-mode fibers.

: One or more measurements for the event exceeds the limit.

: A bend with loss that exceeds a macrobend threshold. If **Macrobend Detection** is **Off**, the EventMap shows the blue circle shown above. Macrobend detection is available only for single-mode fibers.

③ : The event is hidden by a previous event.

The map shows a dotted line around hidden events and the event that causes them to be hidden. The tester combines the loss of all the events that are in the dotted line. To see the combined loss, tap the event that causes the hidden event. (④). The tester does not show loss measurements for hidden events. See **HIDDEN** on page 370.

: The event is hidden by a previous event. The reflectance of the event exceeds the limit. This icon shows only when the test limit has a limit for reflectance.

④ The cause of the hidden event. In this example, the cause is a connector on a short patch cord. The loss of the second connector is hidden in the attenuation dead zone of the first connector.

⑤ Tap ? to see information about the selected event.

⑥ The event editing function lets you edit loss events. See "How to Edit a Loss Event" on page 507.

Event Table

The event table shows a list of the events on the fiber. To see the event table, tap **TABLE** on the OTDR results screen. Figure 153 shows an example of an event table. Table 14 gives descriptions of the event types.



GPU12.EPS

Figure 153. Event Table

① To see details for an event, tap the event in the table. Scroll the table if necessary to see all the events.

- **(ft)** or **(m)**: The distance to the event
- **LOSS**: The loss of the event.
- **REFLECT**: The reflectance of the event.
- **TYPE**: The event type. See Table 14. This is the type that best matches the characteristics of the event at all wavelengths. It can be different from the event type shown on the OTDR plot, which is the type for each wavelength.

Notes

*The **OTDR Port** and **End** events always show **N/A** for loss because backscatter measurements are not available on both sides of those events.*

*If an event shows "---" in the **LOSS** and **REFLECT** columns, the tester did not find the event at the selected wavelength. Tap an arrow button (⑤) to see the measurements for the other wavelength.*

② Tap ? to see help for this screen.

③ **OVERALL**: Tap this button to see overall measurements of length, loss, and optical return loss for the fiber.

④ When more than one button shows at the bottom of the screen, the tester highlights one in yellow to recommend which one to tap. See "Buttons to Do Tests and Save Results" on page 63.

⑤ If the tester made measurements at two wavelengths, tap the arrow buttons to see results for the other wavelength. Possibly, some events show only at one wavelength.

⑥ The icons show the overall status of the event at all wavelengths. This can be different from the event status shown on the OTDR plot, which is the status for each wavelength.

: The measurement is within the limit.

: The measurement exceeds the limit.

: The tester does not give a pass or fail result to the event. This occurs for **OTDR Port**, **Hidden**, and **End** events. This occurs for all events if you use the **Document Only** test limit because **Document Only** does not have values for limits.

When you use a test limit that has a reflectance limit, **Hidden** events show a **FAIL** status if their reflectance exceeds the limit.

To see details for an event, such as limits for measurements and the **SEGMENT ATTENUATION** coefficient, tap the event in the table.

Table 14. Event Types in the Event Table

Event	Description
Reflection A pulse of light reflected back to the OTDR.	Reflections are caused by a connector, a tight bend, a mechanical splice, or a crack in the fiber. Reflective events can possibly be ghost events. These are frequently smaller than reflective events that are connectors. If the reflection is not caused by a connector, inspect the cable for tight bends or damage. Use a visual fault locator to verify the fault.
OTDR Port The connector on the OTDR.	This event is the OTDR port on the tester. The **OTDR Port** event always shows **N/A** for loss because backscatter measurements are not available on both sides of the event. For SmartLoop tests, the **OTDR Port** event for **Fiber B** is the near end of the loopback cord. For the second part of a bi-directional test, the **OTDR Port** event for **Fiber A** is the near end of the loopback cord. See Figures 164 on page 402 and 166 on page 409. The tester does not give a **PASS/FAIL** status to this event.
Launch The end of the launch cord. **Tail** The start of the tail cord.	The tester identifies these events if you connected launch and tail cords and turned on **LAUNCH COMPENSATION** on the **TEST SETUP** screen. See "About Launch and Tail Cords" on page 340.

Table 14. Event Types in the Event Table (continued)

Loss An event where the level of reflected light suddenly decreases, and the reflection from the event is too small to measure.	Caused by a splice, bend, or a low-reflectance connection, such as an angled physical contact (APC) connection. You can use the **Change Event Type** menu to edit loss events. See "How to Edit a Loss Event" on page 507. You can use the **OTDR Trace Viewer** in LinkWare PC to label loss events as splices, APC connectors, or splitters. The tester uses the loss limit for a splice (typically 0.30 dB) to give a **PASS** or **FAIL** result to a loss event. A good APC connection that has a higher loss than a splice will have a **FAIL** result. To change this result to a **PASS**, use LinkWare PC to edit the event in the **OTDR Trace Viewer**. If the loss event is not caused by a splice or APC connection, inspect the cable for tight bends, especially if the loss is more at a higher wavelength. If **Macrobend Detection** is **On** tester can identify bends. When the tester uses a narrower pulse width, some loss events can show as reflective events.
Bend A loss event that the tester identifies as a bend in the fiber.	The tester identifies loss events as bends when these three conditions are true: • The event has more loss at higher wavelengths. • The difference between the losses at two wavelengths (such as 1310 nm and 1550 nm) is more than the macrobend threshold. See "Macrobend Setup" on page 336. • **Macrobend Detection** is **On**. If it is **Off**, the tester shows bends as loss events. *Note* *Macrobend detection is available only for single-mode fibers.*

Table 14. Event Types in the Event Table (continued)

End The end of the fiber or a loss greater than the end threshold.	The **End** event always shows **N/A** for loss because backscatter measurements are not available on both sides of the event. For SmartLoop tests, the **End** event for **Fiber A** is the far end of the loopback cord. The tester does not give a **PASS/FAIL** status to this event, unless you use a custom test limit that includes a limit for segment attenuation, and the segment before the **End** event fails.
Hidden End The end of the fiber is in the attenuation dead zone of the previous event.	The tester cannot give an accurate distance to the end of the fiber because the end is hidden. The tester does not give a **PASS/FAIL** status to this event.
Hidden The event is in the attenuation dead zone of the previous event.	The tester detected the event, but does not have enough information to measure its loss separately from the previous event. Thus, the tester includes the loss of the hidden event with the loss of the previous event. The loss of the hidden event shows as **N/A**. A hidden event is often the end of a patch cord that is hidden in the dead zone made by the first connector on the cord. To get a better view of hidden events, do a **Manual OTDR** test with the **Averaging Time** set to **Best Resolution**. Narrow pulse widths can also help you see hidden events. If the event is not a connection, inspect the fiber near the location of the event. Use a visual fault locator to see faults such as cracks or breaks in the fiber. Ghosts anywhere on the fiber and splices near the end of the fiber can also cause hidden events. The tester does not give a **PASS/FAIL** status to this event, unless the test limit has a limit for reflectance and the hidden event exceeds the limit.

Table 14. Event Types in the Event Table (continued)

Ghost (Also known as an "echo".) The event is a copy of another reflection. It is caused by light bouncing back and forth between connectors. Page 530 shows OTDR traces with gainers.	Caused by a dirty or unseated connector, highly-reflective connector, a connector with an incorrect polish, a sharp bend, or a crack in a fiber. To see where to look for the fault, find the **Ghost Source** in the event table. The ghost source is always before the ghost. The event table does not show ghosts that occur after the end event. If the ghost source is a hidden event, the tester possibly will not identify a ghost event as a ghost. The tester does not give a **PASS/FAIL** status to this event.
Ghost Source A reflective event that causes an ghost.	Caused by a dirty or unseated connector, a connector with solvent on its endface, a highly-reflective connector, a connector with the wrong polish, a sharp bend, or a crack in a fiber. On traces with multiple ghosts, the event table possibly shows only the strongest ghost source. You can usually see that other reflections are ghosts because they occur at multiples of distances to connectors and they show almost no loss. Verify that the connector is seated properly. Inspect connectors that cause ghosts. If a connector is apparently not the ghost source, use a visual fault locator to look for bends or cracks in the fiber near the ghost source.

Table 14. Event Types in the Event Table (continued)

Gainer An apparent gain in the strength of the returned signal. A gainer shows as a negative value of loss. Page 529 shows OTDR traces with gainers.	Caused by a splice or connection between two fibers that have different backscatter coefficients, numerical apertures, core diameters, or mode field diameters. The tester compares the loss of non-reflective gainers to the limits for splice loss to give the event a **PASS/FAIL** status. If a gainer occurs at a connection, the gainer shows as a **Reflection** event with negative loss. The tester compares reflective gainers to the limits for reflective events to give the event a **PASS/FAIL** status. Strong reflections at or before an event can cause tailing after the event, which can cause a measurement of negative loss. To find the cause of a gainer, see if the fiber type is different before and after the splice or connection. Replace fiber if necessary. Fibers that are the same can possibly have different tolerances, which can cause gainers at a splice. When this occurs, the splice is usually good and does not require rework.
Gainer (continued)	If you do the OTDR test from the other end, the gainer event will show a loss. If you save the result with the same ID as the result from the other direction, the tester automatically calculates bi-directional averages of loss measurements and includes the averaged values in the test record. The averaged loss is more accurate than the loss measured in one direction. See “Averaged Bi-directional Results” on page 410. Gainers at launch events can occur when the launch cord does not have the same properties as the fiber under test. In this situation, you can get more reliable results if you do a bi-directional test. Use a tail cord that has the same properties as the launch cord and use **Launch + Tail** compensation.

Table 14. Event Types in the Event Table (continued)

No Fiber The tester does not see a fiber connected to the OTDR port.	No fiber is connected to the OTDR port, the fiber is broken or cracked near the port, the port has very high loss, or the fiber is too short. Connect a fiber to the port or to the launch cord. If a fiber is connected: • Make sure the connection is tight and there are no breaks or cracks in the fiber near the port. • Clean and inspect the port connector. • Do a **Manual OTDR** test with a narrow pulse width.
Out of Range The tester did not find an end event.	This can occur for **Manual OTDR** tests when the range you selected is too short. Select a higher range on the **TEST SETUP** screen. For **Auto OTDR** tests, **Out of Range** can occur when the cabling is much longer than the range of the module. Rarely, very bad connections along the cabling can cause the OTDR to select a range that is too short. Compare the expected cabling length to the maximum range of the module. If the length is within range, try the **Manual OTDR** test with the maximum range setting. For **DataCenter OTDR** tests, **Out of Range** can occur if the link is longer than the range of the test.

Table 14. Event Types in the Event Table (continued)

Weak Signal The signal is attenuated below the background noise level before the tester found the end of the fiber.	No fiber is connected to the OTDR port, the fiber is too short, there is a bad connector in the link, the fiber is broken or bent, or the fiber is very long. **Weak Signal** can also occur if the fiber has very high loss or you did a **Manual OTDR** and the pulse width was too narrow.
No Signal The tester did not receive any reflected light from the fiber or from the OTDR port connector.	There is a problem with the module. If this event continues to occur, contact Fluke Networks for assistance.

OVERALL FIBER RESULTS Screens

The **OVERALL FIBER RESULT** screen shows more information about the link. To see this screen, tap **OVERALL** on the **TABLE** screen. See Figure 154.

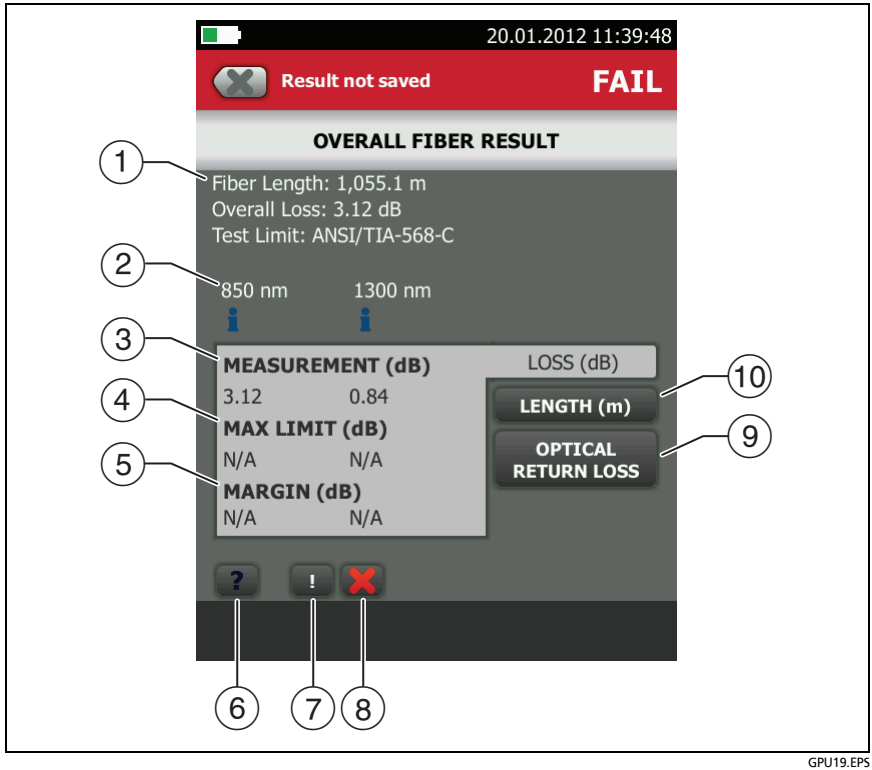

GPU19.EPS

Figure 154. OVERALL FIBER RESULT Screen

① **Fiber Length**: The length of the fiber.

Overall Loss: The loss of the connectors and the fiber in the link.

Test Limit: The test limit the OTDR used for the test.

② The wavelengths the tester used for the test.

③ Measurements of overall loss for each wavelength the tester used. The measurement is red if it exceeds the limit.

④ **LIMIT**: The maximum loss allowed by the selected test limit for each wavelength the tester used.

⑤ **MARGIN**: The difference between the limit and the measured loss for each wavelength the tester used. Margin is negative if the loss exceeds the limit.

⑥ Tap  to see help for this screen.

⑦ If the results include warnings, tap  to see the warnings.

⑧ If a warning caused the test to fail, tap  to see the warning. Some conditions make the OTDR test fail even when all measurements are within the limits.

⑨ **OPTICAL RETURN LOSS**: This tab shows the ORL for the link. Optical return loss is the ratio of the light from the source to the light that the link reflects back to the source. The reflected light is the total light reflected by the fiber and components in the link. This includes the launch/tail cord events, fiber segments, connectors, splices, and faults. If launch compensation is on, this includes only the fiber between the launch and tail connections, including the launch and tail events. If launch compensation is off, it includes the fiber from the OTDR port connection, including the OTDR port connection, to the end of the fiber. The last connector is not included, unless it has a reflectance that is below the reflectance of the fiber, as can occur with APC connectors.

ORL values are in units of positive decibels. A larger ORL value shows that less light is reflected back to the source. For example, a link with an ORL of 45 dB reflects less light back to the source than a link with an ORL of 30 dB.

⑩ **LENGTH**: This tab shows the length of the fiber and the maximum length allowed by the test limit. If the distance to the end of the fiber does not agree at all wavelengths, this tab shows the longest length.

EVENT DETAILS Screen

The **EVENT DETAILS** screen shows more information about events. To see this screen, tap the information window for an event in the EventMap or in the event table. See Figures 155 and 156.

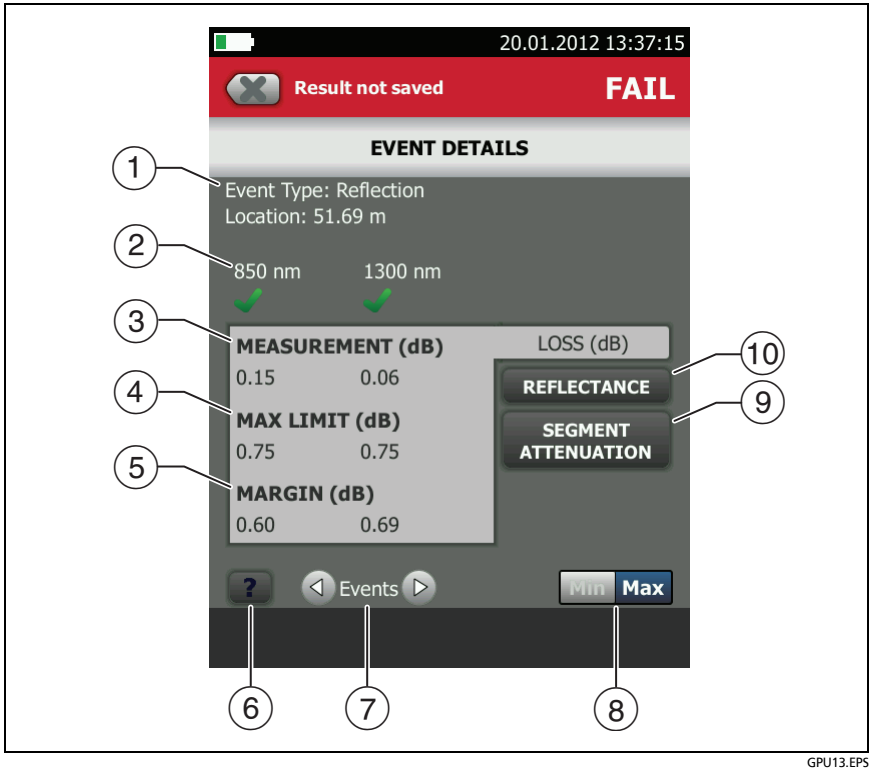

GPU13.EPS

Figure 155. EVENT DETAILS Screen for a Reflection

① The type of event (see Table 14) and the distance from the tester to the event.

② The wavelengths the tester used for the test. Possibly, some events show only at one wavelength.

③ The loss of the event for the wavelength the tester used.

④ **MAX LIMIT**: The maximum loss allowed by the selected test limit for each wavelength the tester used. **N/A** shows if there is no test limit for the measurement.

⑤ **MARGIN**: The difference between the limit and the measured loss for each wavelength the tester used. Margin is negative if the loss exceeds the limit. **N/A** shows if there is no test limit for the measurement.

⑥ Tap ? to see help for this screen.

⑦ To see details for the event before or after this one, tap ◁ or ▷ next to **Events**.

⑧ The **Min/Max** control shows if the test limit has a minimum and maximum value for the measurement. Tap the control to see the values. Most industry-standard limits do not have minimum values.

⑨ **SEGMENT ATTENUATION**: This tab shows the attenuation coefficient of the fiber segment before the event. This is the attenuation per unit of length for the segment. This value shows as **N/A** if the tester could not measure it accurately. This can occur for short segments or if the connector before the segment has too much tailing.

⑩ **REFLECTANCE**: Reflectance is the return loss for one event. It is the ratio of the light reflected at one point on the fiber to the light that gets to that point from the source. Reflectance values are in units of negative decibels. A smaller (more negative) reflectance value shows that less light is reflected back to the source. For example, a reflectance of -45 dB shows for a good multimode connection. A reflectance of-20 dB shows for a bad multimode connection that reflects more light back to the OTDR.

Reflectances that exceed the measurement range of the tester show a ">" (greater than) symbol. If any reflection shows ">", ORL shows "<" (less than).

Reflectances from hidden events can possibly show "<" because the tester cannot measure the backscatter before the event.

Note

*Reflectance measurements are affected by the backscatter value you enter on the **TEST SETUP** screen.*

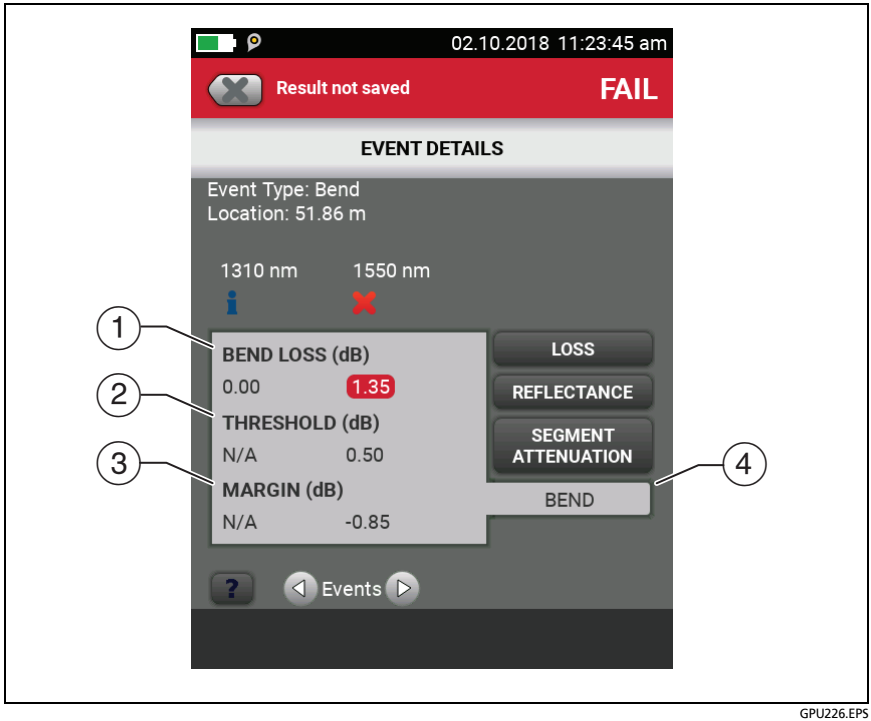

GPU226.EPS

Figure 156. EVENT DETAILS Screen for a Bend

① The difference between the loss measurements for the longer and shorter wavelengths. The value for the longer wavelength is red if it exceeds the threshold for the difference in loss between the two measurements. The shorter wavelength shows 0 dB and an result on the **BEND** and **LOSS** tabs because it is the reference for the calculation of the bend's loss. If you need to see the bend's loss at each wavelength, do the test again with **Macrobend Detection** turned off.

② **THRESHOLD**: If the difference between the loss measurements for the wavelengths is more than the threshold, the tester identifies the event as a bend. The default is 0.50 dB.

③ **MARGIN**: The **THRESHOLD** value minus the delta value (①).

Note

Macrobend detection is available only for single-mode fibers.

About Measurements that Show "<" and ">"

In some situations, measurements show with a "<" or ">" (less than or greater than) symbol. This occurs if the fiber is too long, the signal is weak, events are very close together, or a measurement is beyond the range of the tester.

OTDR Trace

To see the OTDR trace, tap **TRACE** on the OTDR results screen. Figure 157 shows an example of an OTDR trace.

① The decibel scale shows the level of backscatter. The tester sets the backscatter level at the start of the trace to approximately 0 dB.

② The measurement cursor. To measure loss and distance, tap the yellow circle so that **MARK** shows, drag the cursor to the start of the measurement, tap **MARK**, then drag the cursor to the end of the measurement. See "How to Use the Measurement Cursor on the OTDR Trace" on page 384.

③ When the cursor is on an event, this area shows the event type. See Table 14 on page 368. The text is green if the event passed, red if the event failed, or black is there is no limit for measurement. The pass or fail status is for the wavelength shown. The event type does not show after you tap **MARK** to use the measurement cursor.

Note

*Sometimes events show as different types at different wavelengths. This occurs because the component that causes the event reacts differently to different wavelengths. For example, an APC connector can show as a **Loss** event at 1310 nm, and a **Reflection** at 1550 nm. In these situations, the tester shows a **Reflection** in the **TABLE** and **EventMap**, and uses the limits for a reflective event.*

④ Tap ? to see help for this screen.

⑤ Tap **SETUP** to change the **RANGE**, **PULSE WIDTH**, **AVERAGING TIME**, and wavelengths for the test. You can also see the settings used on the test. See "How to Quickly Try Different OTDR Settings" on page 387.

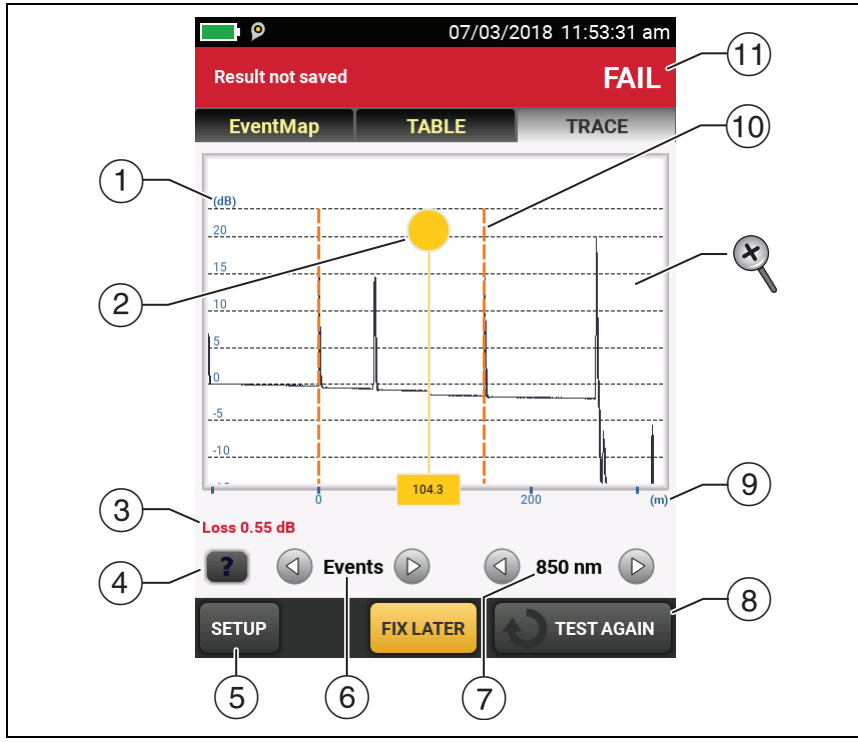

GPU14.EPS

Figure 157. OTDR Trace

⑥ Tap ◁ or ▷ to move the cursor to another event.

⑦ The wavelength the tester used for the test. If the tester used more than one wavelength, tap ◁ or ▷ to see the other wavelength. Possibly, some events show only at one wavelength.

You can also tap ◁ or ▷ to see the trace overlay screen. When **All** shows, the screen shows the traces for all wavelengths.

⑧ When more than one button shows at the bottom of the screen, the tester highlights one in yellow to recommend which one to tap. See “Buttons to Do Tests and Save Results” on page 63.

⑨ The distance scale shows the distance along the fiber.

⑩ Markers for the end of the launch cord and the beginning of the tail cord are orange, dashed lines.

⑪ **PASS**: All measurements were within the limits.

FAIL: One or more measurements exceeded its limit.

To zoom in and out, use the pinch, reverse-pinch, and double-tap gestures on the touchscreen. You can also use the zoom controls to change the magnification on the distance and decibels scales independently. See Figure 5 on page 25.

How to Use the Measurement Cursor on the OTDR Trace

You can use the cursor on the OTDR trace to measure distance and loss along the cabling. As you move the cursor, the tester calculates averages around the mark and cursor locations. This decreases the effects of noise on measurements.

To use the measurement cursor

Refer to Figure 158:

1. Tap the yellow circle at the top of the cursor (②) so that **MARK** shows.
2. While **MARK** shows, use one of these methods to move the cursor to the point where you want to start the measurement:
   - Drag the cursor with the yellow circle (②).
   - Tap or press and hold ◁ or ▷ (③).
   - To move the cursor to an event, tap ◁ or ▷ next to **Events** (⑥).
3. Tap **MARK**, then while **UNMARK** shows, move the cursor to the point where you want to end the measurement.

Note

*If **UNMARK** and the cursor controls do not show, tap the yellow circle.*

These indicators show on the screen:

- **ΔdB =** : The difference in the power levels (in decibels) between the start and end of the green measurement bar.
- **Δm** or **Δft =** : The distance between the start and end of the green measurement bar.
- **ΔdB/km** or **ΔdB/kft =** : Power loss (in decibels) that would occur over 1 km (1000 m) or 1 kft (1000 ft) of fiber. The tester uses the loss between the start and end of the green measurement bar to calculate this value.

(continued)

4 To make a new measurement, tap the yellow circle, tap **UNMARK** (⑨), then do steps 1, 2, and 3 again.

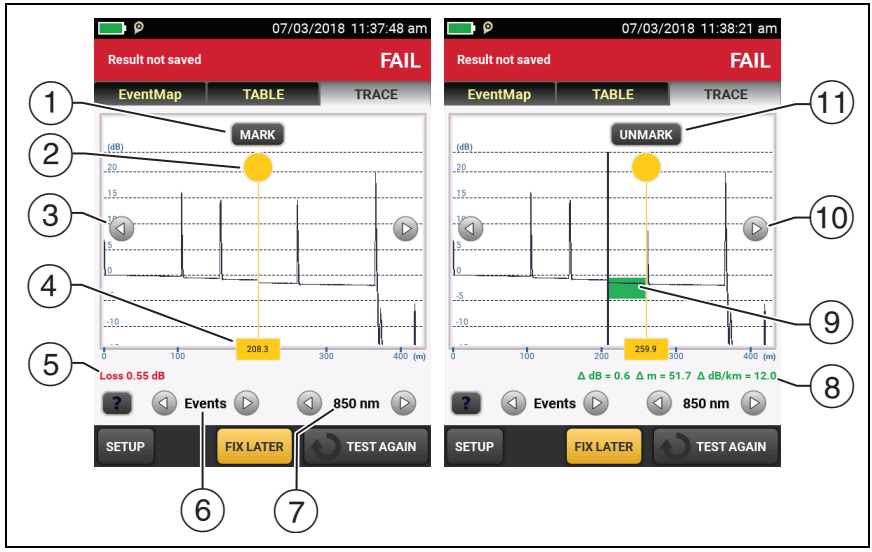

GPU18.EPS

Figure 158. How to Use the Measurement Cursor on the ODTR Trace

Refer to Figure 158:

① To specify the start of a measurement, tap the yellow circle (②), then tap **MARK**.

② To see the **MARK** and **UNMARK** buttons, tap the yellow circle.

③ To move the cursor in small increments, tap or press and hold  or . If these buttons do not show, tap the yellow circle on the cursor.

④ The measurement in the square is the distance from the start of the fiber to the yellow cursor.

⑤ When the cursor is on an event before you set the mark, this area shows the event type. See Table 14 on page 368. The text is green if the event passed, red if the event failed, or black is there is no limit for measurements. After you set the mark, the event type does not show.

⑥ To move the cursor to an event, tap  or .

⑦ If the tester used two wavelengths, tap  or  to see the other wavelength. When **All** shows, the screen shows the traces for all wavelengths.

⑧ Δ **dB**: The difference in the power levels (in decibels) between the start and end of the green bar.

Δ **m** or Δ **ft**: The distance between the start and end of the green bar.

Δ **dB/km** or Δ **dB/kft**: The power loss (in decibels) that would occur over 1 km (1000 m) or 1 kft (1000 ft) of fiber based on the loss between the start and end of the green bar.

⑨ The green measurement bar goes from the start point to the end point of your measurement.

⑩ When **MARK** or **UNMARK** show, you can tap or touch and hold these arrows to move the yellow cursor in small increments.

⑪ To start another measurement, tap **UNMARK**. If **UNMARK** does not show, tap the yellow circle (②).

How to Quickly Try Different OTDR Settings

After an OTDR test, you can quickly change some OTDR settings when you want to try different settings on the same fiber. After you do a test, tap **SETUP** on the **TRACE** screen, then select settings on the **MANUAL OTDR** screen (Figure 159).

You can save your settings to the **Active** test setup or to a **New** test setup, or you can tap **TEST** to do a test without saving the settings.

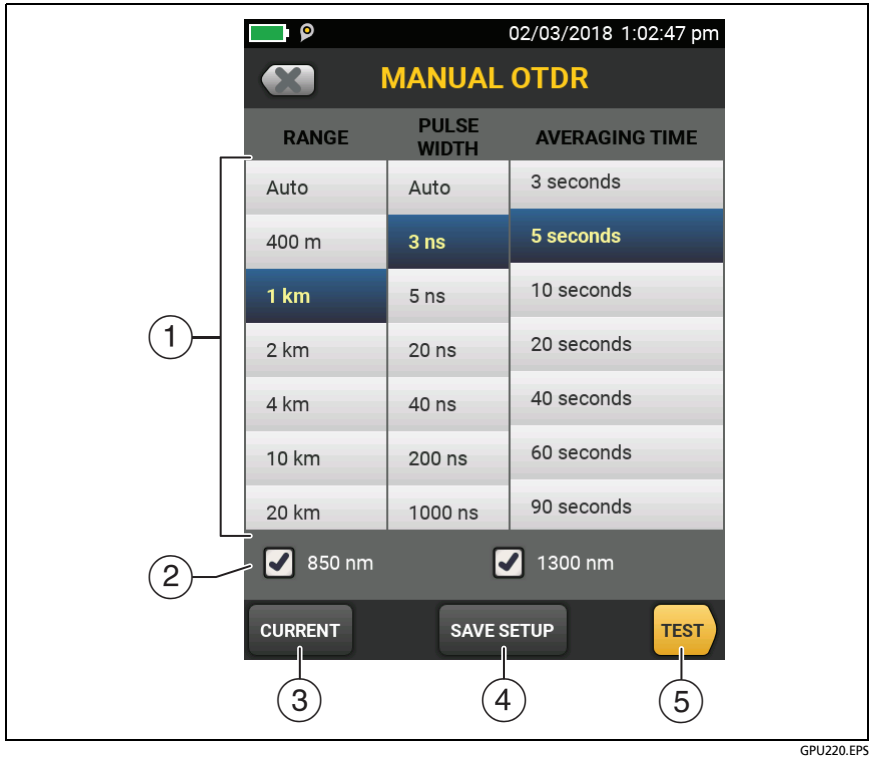

GPU220.EPS

Figure 159. Manual OTDR Screen for Quick Changes to Test Settings

① Tap the settings you want. You can scroll some columns to see more settings. Table 12 on page 332 gives descriptions of the settings.

② Select the wavelengths to use for the test.

③ Tap **CURRENT** to see the settings the tester used for the last test.

④ The **SAVE SETUP** button lets you save your settings:

Note

*The **SAVE SETUP** button does not show if the module selected in the test setup does not match the installed module. For example, the button does not show if the **OptiFiber Pro - Quad OTDR** module is installed, but the active test setup is for an **OptiFiber Pro - Multimode OTDR** or **OptiFiber Pro - single-mode OTDR** module.*

Active: The tester saves the settings in the active test setup, and changes the active **Test Type** to **Manual**.

New: The tester saves the settings in a new **Manual** test setup that is added to the project. The tester uses the **Manual** setup until you save the results or exit the results screen then start a test from the home screen. Then the tester uses the test setup it had before you changed the OTDR settings.

If you save your settings in a new test setup:

The tester uses your settings until you save the results or exit the results screen then start a test from the home screen. Then the tester uses the test setup it had before you changed the settings.

If you do not save your settings:

The tester uses your settings until you save the results or exit the results screen then start a test from the home screen. Then the tester uses the test setup it had before you changed the settings.

⑤ Tap **TEST** or press TEST to do a test with the settings you selected.

How To Do Bi-directional Tests on Single Fibers

Notes

For bi-directional tests on links with two fibers, Fluke Networks recommends that you use the SmartLoop feature. See "Bi-directional SmartLoop Tests" on page 404.

*If a span is defined when you do a bi-directional test, you can see the results from both ends of the fiber, but the tester does not calculate averaged bi-directional results. See item ④ in Figure 167 on page 411. To remove the span definition, tap **Tools**, **Span**, then tap **Delete**.*

A bi-directional test gives you OTDR results for both directions on a fiber. The tester automatically calculates averages of the two results and includes the averaged values in the test record.

1. On the home screen, tap the **Next ID** panel.
2. On the **CHANGE ID** screen, turn off the **Auto Save** function and set the **End 1**/**End 2** control to **End 1**.
3. Enter names for the ends of the fiber (optional):
   a. On the **CHANGE ID** screen, tap the panel that shows **End 1:**.
   b. On the **EDIT END NAME** screen, tap the **End 1** and **End 2** panels to use the keyboard to enter names for each end. Tap **DONE** to save the names.
4. On the **CHANGE ID** screen, tap **DONE**.
5. Clean and inspect all connectors, then connect the tester to **End 1** of the link.
6. Tap **TEST** or press TEST, then save the result.

7 Clean and inspect the connector for **End 2** of the link, then connect the tester to **End 2**.

8 Press HOME, then tap the **Next ID** panel.

9 Tap the **End 1/End 2** control at the top of the screen to make it show **End 2**, then tap **DONE**.

10 Tap **TEST** or press TEST.

11 Save the result with the same ID you used for **End 1**.

The tester automatically calculates bi-directional averages of loss measurements and includes the averaged values in the test record. For descriptions of these results, see "Averaged Bi-directional Results" on page 410.

How To Do Bi-directional Tests for All IDs in a Set

In this procedure, you test all the links from **End 1**, then test them all again from **End 2**.

1 On the home screen, tap the **Next ID** panel.

2 If necessary, tap **CHANGE CABLE IDs** to select or make an ID set.

3 On the **CHANGE ID** screen, turn on the **Auto Save** function and set the **End 1/End 2** control to **End 1**.

4 Enter names for the ends of the fiber (optional):

a. On the **CHANGE ID** screen, tap the panel that shows **End 1:**.

b. On the **EDIT END NAME** screen, tap the **End 1** and **End 2** panels to use the keyboard to enter names for each end. Tap **DONE** to save the names.

5 Tap **DONE** on the **CHANGE ID** screen.

6 Clean and inspect the connector for **End 1** of the link that has the first ID in the set.

7 Connect the tester to **End 1** of the link, then tap **TEST** or press ✔TEST.

8 Clean and inspect the connector for **End 1** of the link that has the next ID in the set.

9 Connect the tester to **End 1** of the next link, then tap **TEST** or press ✔TEST.

10 Repeat steps 8 and 9 for all IDs in the set.

11 Press HOME, then tap the **Next ID** panel.

12 On the **CHANGE ID** screen, tap the **End 1/End 2** control at the top of the screen to make it show **End 2**. In the list under **IDs Untested**, the tester highlights the first ID that does not include results for **End 2**. This should be the first ID in the set.

13 Tap **DONE** on the **CHANGE ID** screen.

14 Clean and inspect the connector for **End 2** of the link that has the first ID in the set.

15 Connect the tester to **End 2** of the link, then tap **TEST** or press ✔TEST.

16 Clean and inspect the connector for **End 2** of the link that has the next ID in the set.

17 Connect the tester to **End 2** of the next link, then tap **TEST** or press ✔TEST. For a description of bi-directional test results, see "Averaged Bi-directional Results" on page 410.

18 Repeat steps 16 and 17 for all IDs in the set.

Real Time Trace

The real time trace lets you see changes in the OTDR trace as they occur. In this mode, the tester updates the OTDR trace several times each second. This mode helps you do tasks such as these:

- Find intermittent problems, such as those that occur only when you bend a fiber or apply force to a connector.
- Quickly see differences in segment lengths and the locations of connections in different links. Use the real time trace to look at one link, then connect to another link to quickly see a trace and compare it to the previous trace.
- Align fibers when you make a splice.

⚠Caution

Before you use the OTDR to help you make a splice, read the instructions for the splice machine. The light pulses from the OTDR can cause problems for some splice machines.

Note

The real time trace uses a lot of battery power. Use the ac adapter when you use this test for an extended period of time.

The real time trace test has two modes: auto length and fixed length.

- **AUTO LENGTH**: The tester makes necessary adjustments in its range and pulse width periodically or whenever the trace changes. These adjustments make the trace fill the screen for the best overall view of the fiber. The locations shown for connections and other features change if the range changes. The real time trace starts in auto length mode.

- **FIXED LENGTH**: The tester does not change any parameters for measurements, even if the trace changes. (The tester possibly adjusts the resolution and range at the beginning of the test for a faster test.) This mode helps you stay zoomed-in on an event when the fiber changes.

  If a large change in the fiber length occurs, change to **AUTO LENGTH** mode, then change to **FIXED LENGTH** mode again.

To use the real time trace

1. Clean and inspect the connectors on the launch and tail cords and the fiber to be tested.
2. Connect the tester to the link as shown in Figure 148, 149, or 150.
3. On the home screen, tap the **TOOLS** icon then tap **Real Time Trace**.
4. In the **SELECT A WAVELENGTH** popup, select a wavelength for the test:
   - **Auto**: The tester selects the wavelength that gives the best dynamic range and the smallest dead zones for the link.
   - **Manual**: This takes you to the manual settings screen for the real time trace (Figure 161), where you can select a wavelength. You can also select a **RANGE** and **PULSE WIDTH** if you do not want use the automatic settings.
5. On the **Real Time Trace** screen (Figure 160):
   - To zoom in and out on the trace, use the pinch, reverse-pinch, and double-tap gestures on the touchscreen. See Figure 5 on page 25.
   - To use the fixed-length mode, tap **FIXED LENGTH** (①).
   - To change the **RANGE** and **PULSE WIDTH** tap **SETUP (**②). See Figure 161.
   - To stop and start the test, tap **STOP** (③) and **RESUME**.

- To exit the test, tap **STOP** (③) then tap **EXIT**.
- To save the current results, tap **STOP** (③) then tap **SAVE**.

Notes

The results for the real time trace show only the OTDR trace at one wavelength.

*The real time trace result does not include a **PASS**/**FAIL** status.*

The real time trace does not show the markers for the launch and tail cords.

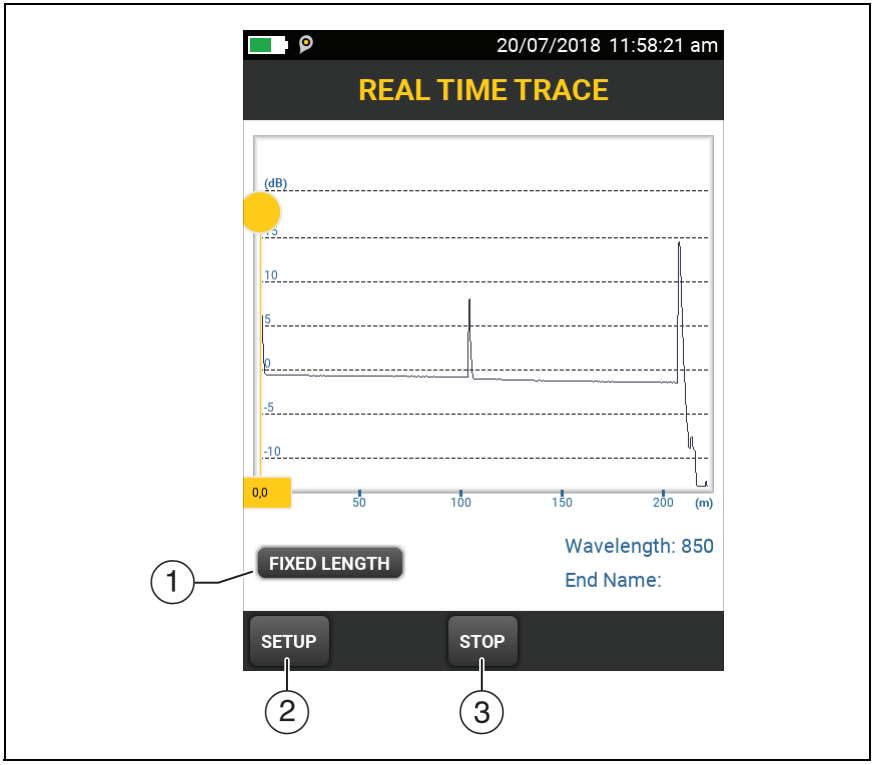

GPU231.EPS

Figure 160. Real Time Trace Screen (OptiFiber Pro module)

How to Quickly Try Different OTDR Settings in Real Time Trace Mode

During a **Real Time Trace** test, you can quickly change some OTDR settings when you want to try different settings on the same fiber. During the test, tap **SETUP** on the **REAL TIME TRACE** screen, then select settings on the **MANUAL OTDR** screen (Figure 161).

You can save your settings to the **Active** test setup or to a **New** test setup, or you can tap **TEST** to do a test without saving the settings.

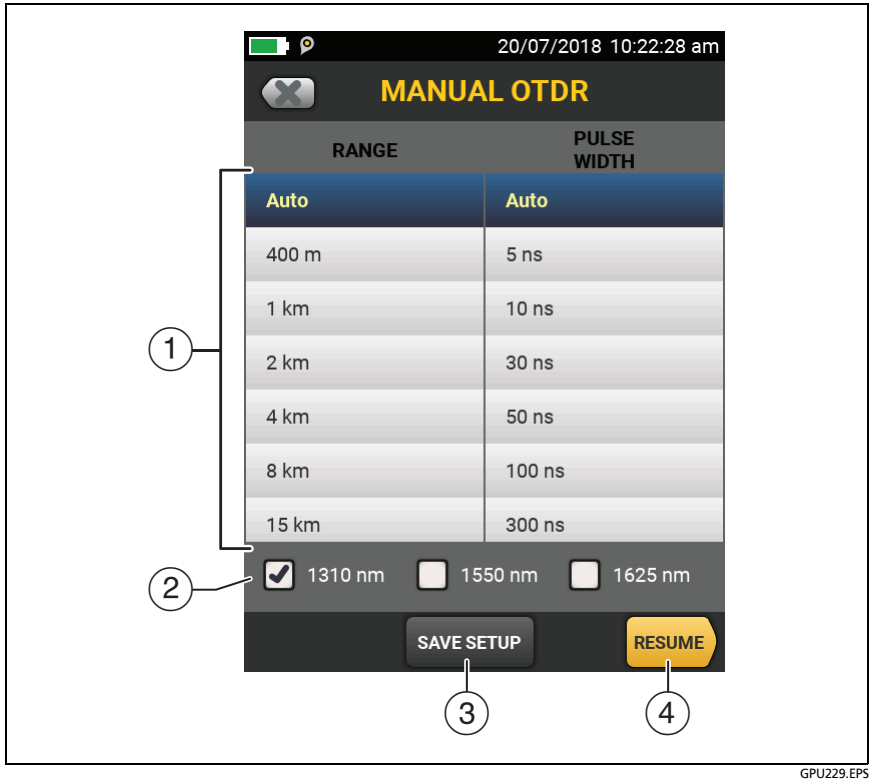

GPU229.EPS

Figure 161. Manual OTDR Screen for Quick Changes to Settings in Real Time Trace Mode

① Tap the settings you want. You can scroll some columns to see more settings. Table 12 on page 332 gives descriptions of the settings.

② Select the wavelengths to use for the test.

③ The **SAVE SETUP** button lets you save your settings:

Active: The tester saves the settings in the active test setup, and changes the active **Test Type** to **Manual**. This selection is not available if the module selected in the active test setup does not match the installed module.

New: The tester saves the settings in a new **Manual** test setup that is added to the project. The tester uses the **Manual** setup until you save the results or exit the results screen then start a test from the home screen. Then the tester uses the test setup it had before you changed the OTDR settings.

If you save your settings in a new test setup:

The tester uses your settings until you save the results or exit the results screen then start a test from the home screen. Then the tester uses the test setup it had before you changed the settings.

If you do not save your settings:

The tester uses your settings until you save the results or exit the results screen then start a test from the home screen. Then the tester uses the test setup it had before you changed the settings.

④ Tap **RESUME** or press ✔TEST to do a test with the settings you selected.

The SmartLoop Test

The SmartLoop test lets you connect the far ends of the two fibers in a link and do one OTDR test to get separate results for each fiber. This reduces your test time by approximately 50% and lets you keep the tester at one end of the links.

You use a launch cord to connect the fibers together at the far end of the link. When you do the SmartLoop test, the tester uses the launch compensation settings to remove the effects of the loopback cord and its connectors.

The tester saves the results in two records, one for each fiber in the link.

The Auto and Manual settings for the SmartLoop test operate the same as for the OTDR test. See Table 12 on page 332.

Figure 162 shows the equipment for the SmartLoop test.

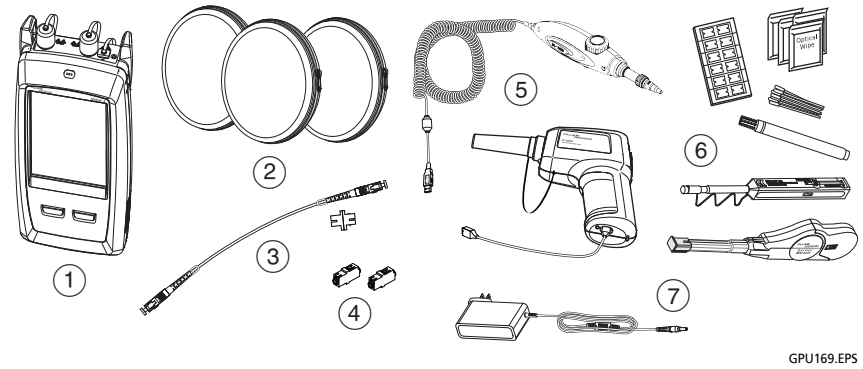

① Main tester with OTDR module installed

② Three launch cords for launch, tail, and loopback connections (match the fiber and connectors to be tested)

③ Short patch cord (30 cm (12 in) maximum) and adapter for bi-directional tests (optional)

④ Two adapters

⑤ FI-1000 or FI-3000 video probe with USB connector

⑥ Fiber cleaning supplies

⑦ AC adapter (optional)

Figure 162. Equipment for SmartLoop Tests

How To Do an Auto SmartLoop Test

Set Up SmartLoop Launch Compensation

1 On the home screen, tap the test setup panel.

2 On the **CHANGE TEST** screen, tap the button next to the Auto SmartLoop test, then tap **USE SELECTED**.

If an Auto SmartLoop test is not available, tap **NEW TEST** to add one to the project. Select settings as necessary on the **TEST SETUP** screen. See “Settings for OTDR Tests” on page 332.

3 Select three launch cords that have the same type of fiber as the fiber you will test. The connectors must be the correct type for each connection you will make. If necessary, you can connect two launch cords together to make a loopback cord that has the same connectors on both ends.

4 On the home screen, tap **SET COMP**.

5 On the **SET LAUNCH METHOD** screen tap **SmartLoop**.

6 Clean and inspect the OTDR port and connectors on the three launch cords.

7 Make the connections shown in Figure 163.

8 Tap **SET**.

9 When the **SET LAUNCH COMP** screen shows, make sure the tester shows the correct distances for the end of the launch cord and the start of the tail cord.

Note

*If the fibers have APC connectors, the tester possibly will not find the correct launch and tail events. If this occurs, do the compensation again and select **Manual Entry** to enter the lengths of the cords manually.*

10 Tap **SAVE**.

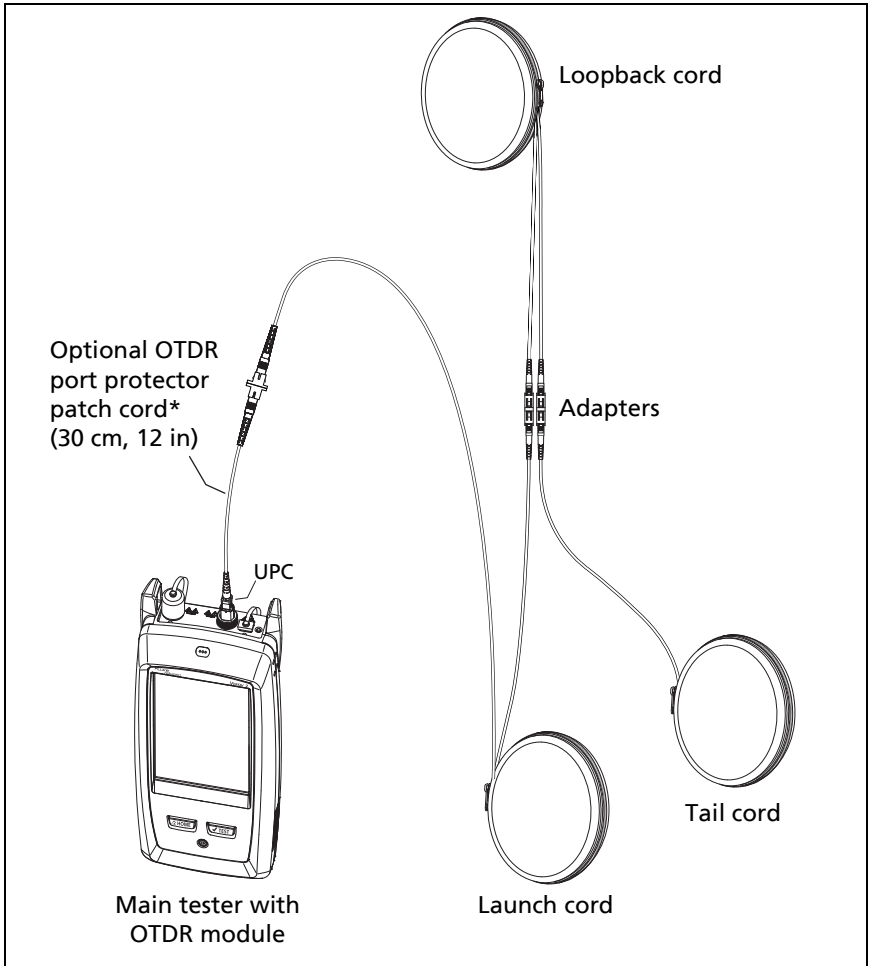

*Optional for tests in one direction. Recommended for bi-directional tests to protect the OTDR port from wear. These cords are available from Fluke Networks.

GPU170.EPS

Figure 163. SmartLoop Launch Compensation Connections

Do the SmartLoop Test

1 Make the connections shown in Figure 164.

2 On the home screen, make sure the IDs for the fibers are correct. The tester uses the **Fiber A** ID for the fiber connected to the launch cord.

3 Tap **TEST** or press TEST.

Note

If the tester shows a message about the connection quality of the OTDR port, but the OTDR connection on the tester is good, inspect the ends of the loopback cord. See "Port Connection Quality for SmartLoop Tests" on page 353.

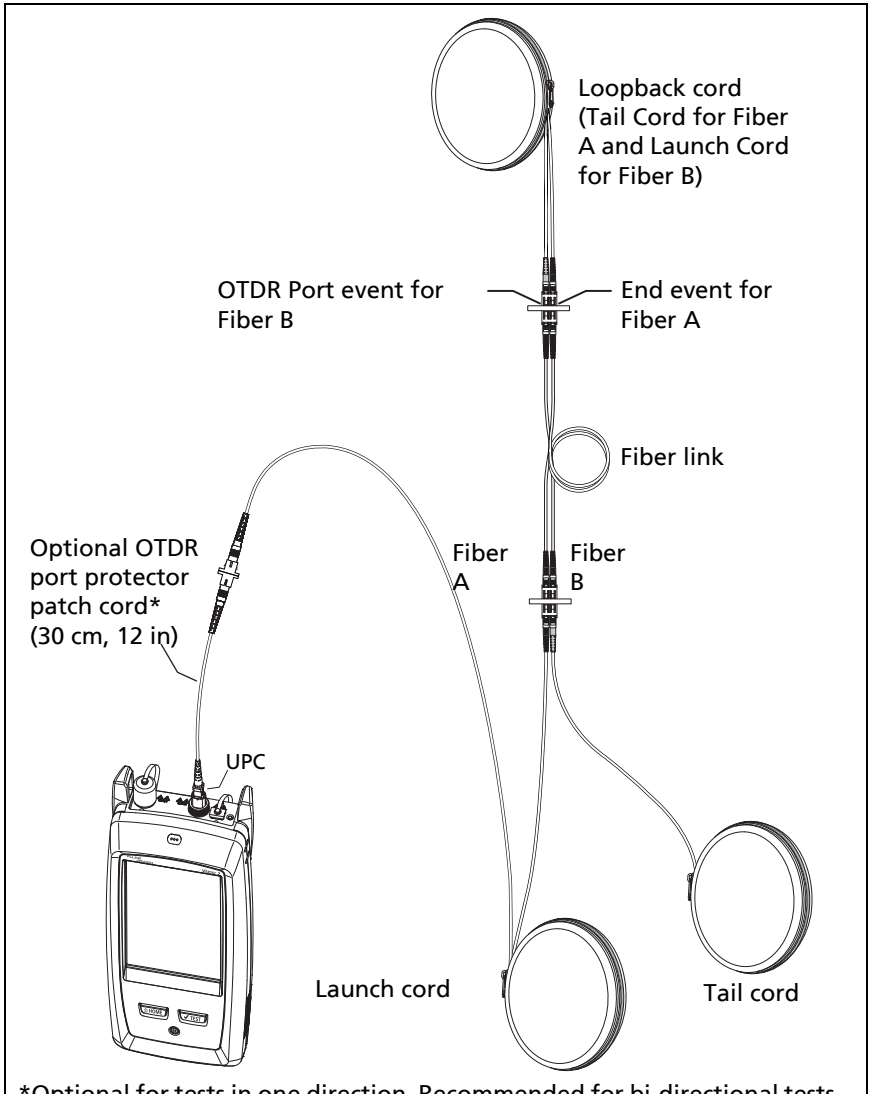

Figure 164. SmartLoop Test Connections

SmartLoop Results

The tester shows the SmartLoop results on two sets of **EventMap**, **TABLE**, and **TRACE** screens, one for each fiber in the link. See Figure 165.

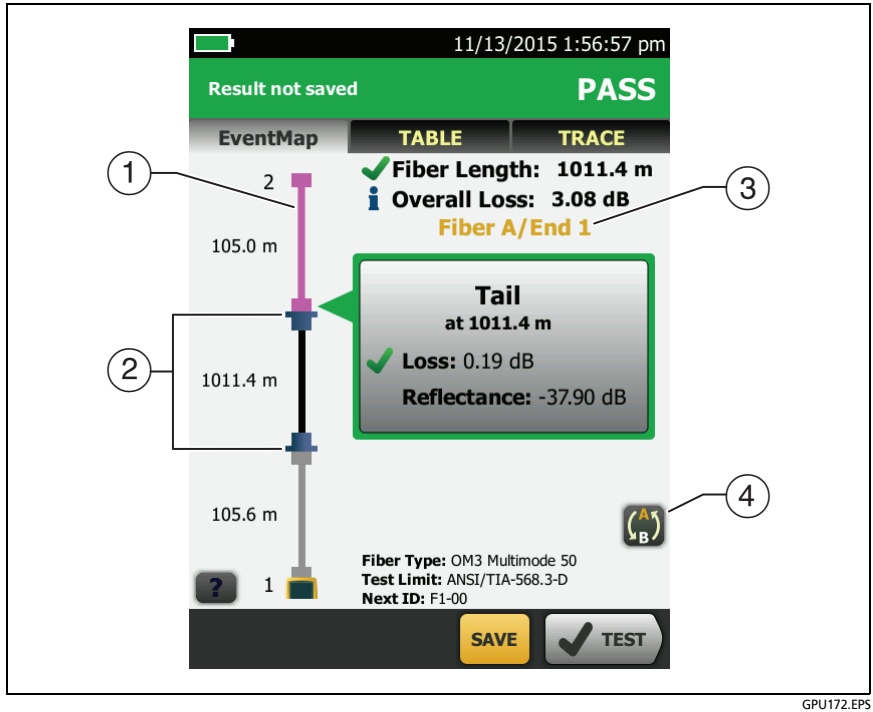

GPU172.EPS

Figure 165. EventMap from a SmartLoop Test

① The purple fiber is the loopback cord.

Note

In saved SmartLoop results, the loopback cord is gray.

② The fiber between the launch cord and the loopback cord is the fiber on one side of the link.

③ **Fiber A** is the side of the link connected to the OTDR at **End 1**.

④ To switch between results for fibers A and B, tap  on the EventMap screen.

Note

When you save SmartLoop results, the tester saves the results in two records, one for each fiber in the link.

Bi-directional SmartLoop Tests

The bi-directional SmartLoop test gives you bi-directional OTDR results for both fibers in a link. The tester also automatically calculates averages of the two results and includes the averaged values in the test record.

Why Do Bi-directional Tests?

OTDR tests from both ends of a fiber can give different results because some properties of fiber and fiber components can cause differences between the loss measurements for each direction.

For example, the loss of an event is the difference between the backscatter levels before and after the event. If a segment after a connector or splice has a higher backscatter value than the segment before, the tester shows different values of loss for the connector or splice from the two directions.

For splices, which have very little loss, the difference in the backscatter of the two fibers can cause an apparent gain in power across the splice in one direction. On multimode fibers, the loss of a splice can be different for the two directions, even if the backscatter of the fibers before and after the splice are the same. This difference is caused by differences in the modal distribution of light in the launch cords and differences in how multimode light propagates down the fiber in each direction.

For these and other reasons, bi-directional averages of connector and splice loss in both directions are more accurate than measurements from one direction.

When To Do Bi-directional Tests

You might need to do bi-directional OTDR tests to meet customer requirements. You should also do a bi-directional test if you get these results:

- The OTDR event table shows a gainer (see Table 14).
- The OTDR event table shows a hidden event (see Table 14).
- The loss of a connector or splice is unusually low.
- The loss of a connector or splice is unusually high, and you are sure that the connector or splice is good.
- There is a splice on the fiber, but it does not show in the OTDR test results.

Note

To do bi-directional tests on single fibers, see *"How To Do Bi-directional Tests on Single Fibers" on page 389.*

How to Do a Bi-directional SmartLoop Test

Set Up SmartLoop Launch Compensation

1. On the home screen, tap the test setup panel, make sure the correct SmartLoop test is selected on the **CHANGE TEST** screen, then tap **EDIT**.

   If an Auto SmartLoop test is not available, tap **NEW TEST** to add one to the project. Select settings as necessary on the **TEST SETUP** screen. See "Settings for OTDR Tests" on page 332.

2. On the **TEST SETUP** screen, in the **Bi-directional** panel, tap the control to make it show **On**, then tap **SAVE**.

3. On the **CHANGE TEST** screen tap **USE SELECTED**.

4. Select three launch cords that have the same type of fiber as the fiber you will test. The connectors must be the correct type for each connection you will make. If necessary, you can connect two launch cords together to make a loopback cord that has the same connectors on both ends.

5. On the home screen, tap **SET COMP**.

6. On the **SET LAUNCH METHOD** screen tap **SmartLoop**.

7. Clean and inspect the OTDR port and connectors on the three launch cords.

8. Make the connections shown in Figure 163 on page 400.

9. Tap **SET**.

10 When the **SET LAUNCH COMP** screen shows, make sure the tester shows the correct distances for the end of the launch cord and the start of the tail cord.

Note

*If the fibers have APC connectors, the tester possibly will not find the correct launch and tail events. If this occurs, do the compensation again and select **Manual Entry** to enter the lengths of the cords manually.*

11 Tap **SAVE**.

Do the SmartLoop Test

1 On the home screen, make sure the IDs for the fibers are correct. The tester uses the **Fiber A** ID for the fiber connected to the launch cord at the start of the test.

2 Make the connections for **End 1** as shown in Figure 166.

Notes

To decrease the wear on the OTDR connector and help keep it clean, use an OTDR port protector (30 cm, 12 in) patch cord to connect the OTDR to the launch and tail cords for bi-directional SmartLoop tests.These cords are available from Fluke Networks.

To minimize the effect of the port protector patch cord on results, do not use a cord longer than 50 cm (20 in).

3 Tap **TEST** or press ✔TEST.

4 Halfway through the test, the tester tells you to connect the tail cord to the OTDR port. Make the connections for **End 2** as shown in Figure 166, then tap **DONE**.

The tester automatically calculates bi-directional averages of loss measurements. See "Averaged Bi-directional Results" on page 410.

⚠Caution

Switch the launch and tail connections at the end of the short patch cord. If you switch the connectors at the patch panel, you will possibly get less accurate results for those connections during the second half of the test.

5 If **Auto Save** is on, the tester uses the next two IDs to save the results for the two fibers.

If **Auto Save** is off, and you tap **SAVE** or **FIX LATER**, the **SAVE RESULTS** screen shows the next two IDs available. You can change the IDs if necessary.

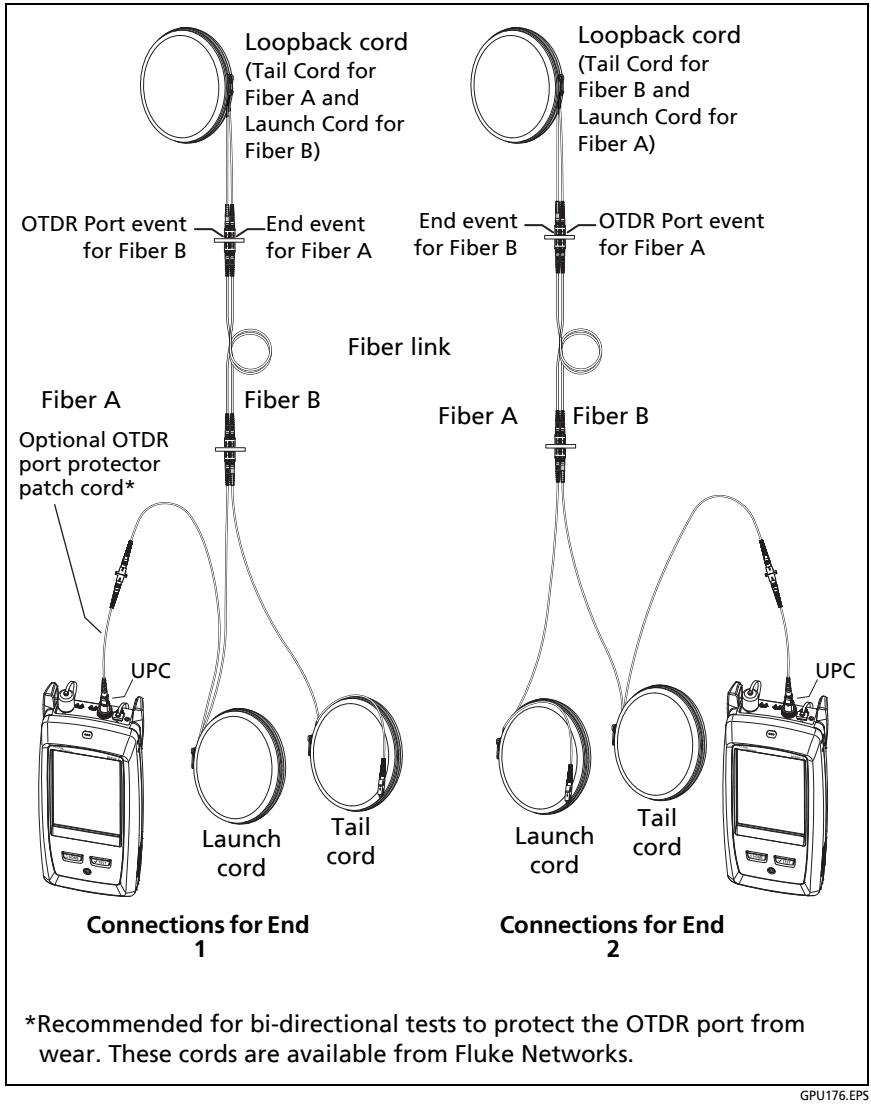

GPU176.EPS

Figure 166. SmartLoop Test Connections for a Bi-Directional Test

Averaged Bi-directional Results

Note

Unless otherwise noted, this section applies to bi-directional results from SmartLoop tests and bi-directional OTDR tests on single fibers.

Figure 167 shows an **EventMap** with averaged results from a bi-directional SmartLoop test.

- For averaged results, the tester shows the **EventMap** and the event **TABLE** tabs, but not the **OTDR** tab. The averaged results do not include **Ghost** events.
- For **Hidden** events, the tester calculates the average loss of the event that causes the hidden event, then divides that loss among the events inside the dotted lines. For example, if the average loss of an event is 0.24 dB, and the event causes one event to be hidden, then the average results show 0.12 dB for the event and 0.12 dB for the hidden event.
- For these measurements, the averaged results show the larger or the worst of the two results:
  - Distance between events: larger distance is shown
  - Reflectance: worst value is shown (for example, -30 dB is worse than -40 dB). The reflectance measurements from the unconnected ends are not used in the averaged results.
  - Segment length: larger value is shown
  - Segment attenuation: larger value is shown
  - Fiber length: larger value is shown
  - Overall loss: average value is shown
  - Optical return loss: worse value is shown (for example, 30 dB is worse than 40 dB)

- The **Port Connection Quality** in the averaged results is the rating from End 1.
- The tester does not calculate averaged results in some situations, for example if a launch, tail, or loopback cord was not detected during a SmartLoop test, or if the distance to the end was not the same in both directions.

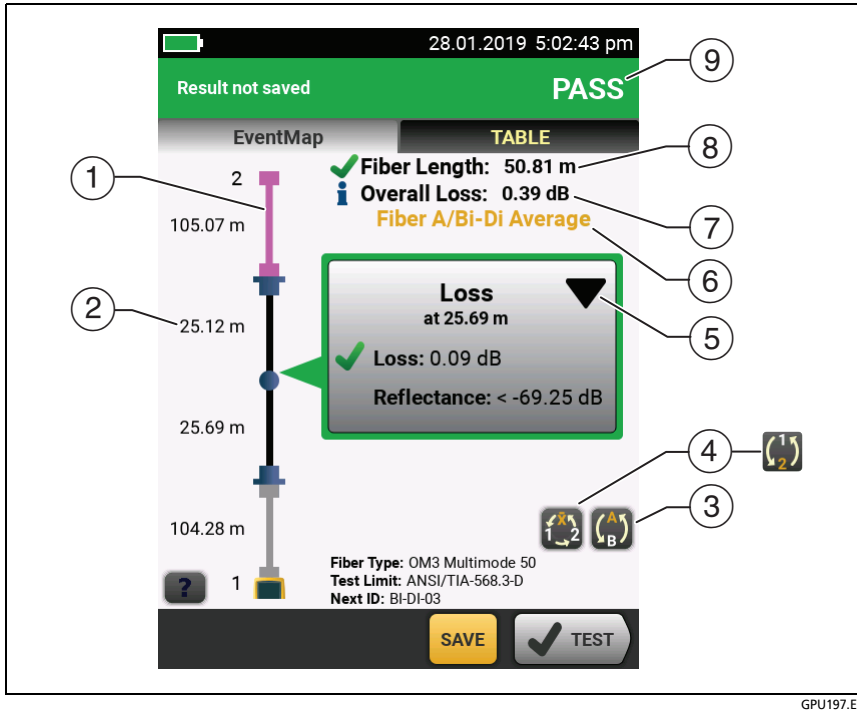

GPU197.EPS

Figure 167. EventMap for Averaged, Bi-directional SmartLoop Results

① The purple fiber is the loopback cord.

② The longest segment length of the two directions.

③  Tap this button to see the results for the other fiber (**A** or **B**).

Touch  for 3 seconds to see a summary of the results from ends 1 and 2 on fibers A and B. To see the EventMap for a result in the list, tap the result.

④  This button shows with bi-directional SmartLoop results and bi-directional OTDR results from single fibers. Tap this button to see results from each direction (**End 1** or **End 2**) or the averaged results ($\overline{X}$).

 This button shows if you do a bi-directional test on a single fiber, but the tester does not calculate averaged results. This can occur for example if the distance to the end was not the same in both directions or if a span was defined when you did the test. Tap this button to see results from each direction (**End 1** or **End 2**). To remove the span definition, tap **Tools**, **Span**, then tap **Delete**.

⑤  The event editing function lets you edit loss events. See "How to Edit a Loss Event" on page 507.

⑥ This line shows which results are on the display. Use the selection buttons (④ and ⑤) to see other results.

⑦ **Overall Loss**: The average loss of the two directions.

⑧ **Fiber Length**: The longest length of the two directions.

⑨ **PASS/FAIL**: The overall result for the fibers.

- **PASS**: The averaged results passed. It is possible for one or both directions to have **FAIL** results, while the overall result is **PASS**.
- **FAIL**: The averaged results failed.

Note

*The tester does not use the bi-directional average results in the calculation for the % **Tested** that shows on the home screen.*

The FaultMap Test

The FaultMap test helps you record the connections in a fiber link and identify bad connections. It can show short patch cords and find connections that have high reflectance. The FaultMap test gives you these results:

- Shows a map of the connectors in the link that possibly do not show on the OTDR EventMap. The map includes connectors that are hidden in the dead zones made by previous events. The FaultMap test shows patch cords as short as 0.5 m for lengths < 2 km.
- Shows connections that are poor because they have high reflectance (> -35 dB).
- Reflective events that are apparently not connectors do not show on the FaultMap diagram. Loss events, including bends, are also not shown.

The FaultMap test finds events that have a reflectance larger than approximately -50 dB on multimode fiber and -60 dB on single-mode fiber. (More negative values mean less reflectance and a better connection. For example, a connector with a reflectance of -40 dB is better than one with -35 dB.)

Notes

Since the FaultMap test finds only reflections, do not use it to look for fusion splices or angled physical contact (APC) connectors.

*FaultMap results do not include a **PASS**/**FAIL** status. The results are only for your documentation of the link.*

FaultMap tests on single-mode fiber usually take more time than OTDR tests. The test uses very narrow pulses on single-mode fiber to make the smallest event dead zones possible, and does more analysis on the reflections in the link.

How to Do the FaultMap Test

Notes

The FaultMap test does not use the launch compensation settings.

The FaultMap test uses the wavelength that gives the best results.

Figure 168 shows the equipment for the FaultMap test.

1. Clean and inspect the connectors on the launch and tail cords or patch cords and the link to be tested.
2. Connect the launch cord to the OTDR port and the link to be tested, as shown in Figure 169. Connect a tail cord to the far end of the link if necessary.

   Or, you can use a patch cord that is 1 m long at minimum to connect the tester to the link. To see results for the far-end connector, connect a tail cord or patch cord (>1 m) to the far end of the link.
3. On the home screen, tap the test setup panel.
4. On the **CHANGE TEST** screen, tap the **FaultMap** test, then tap **USE SELECTED**. If a FaultMap test is not available, tap **NEW TEST** to add one to the project.

   Tap **TEST** or press ✔TEST.

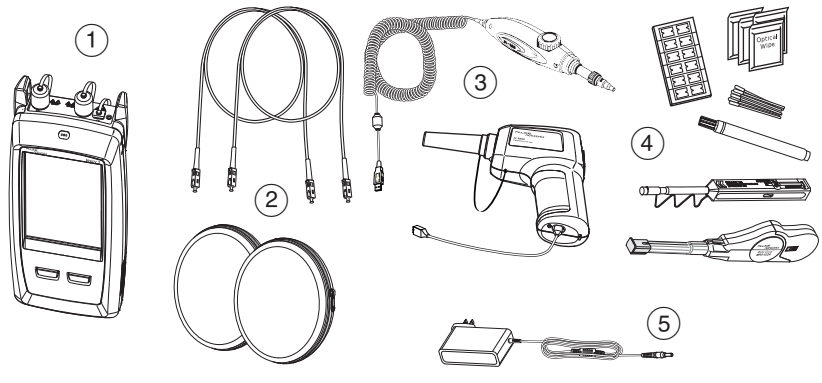

1. Main tester with OTDR module installed
2. Launch and tail cords or patch cords (match the fiber to be tested)
3. FI-1000 or FI-3000 video probe with USB connector
4. Fiber cleaning supplies
5. AC adapter (optional)

Figure 168. Equipment for FaultMap Tests

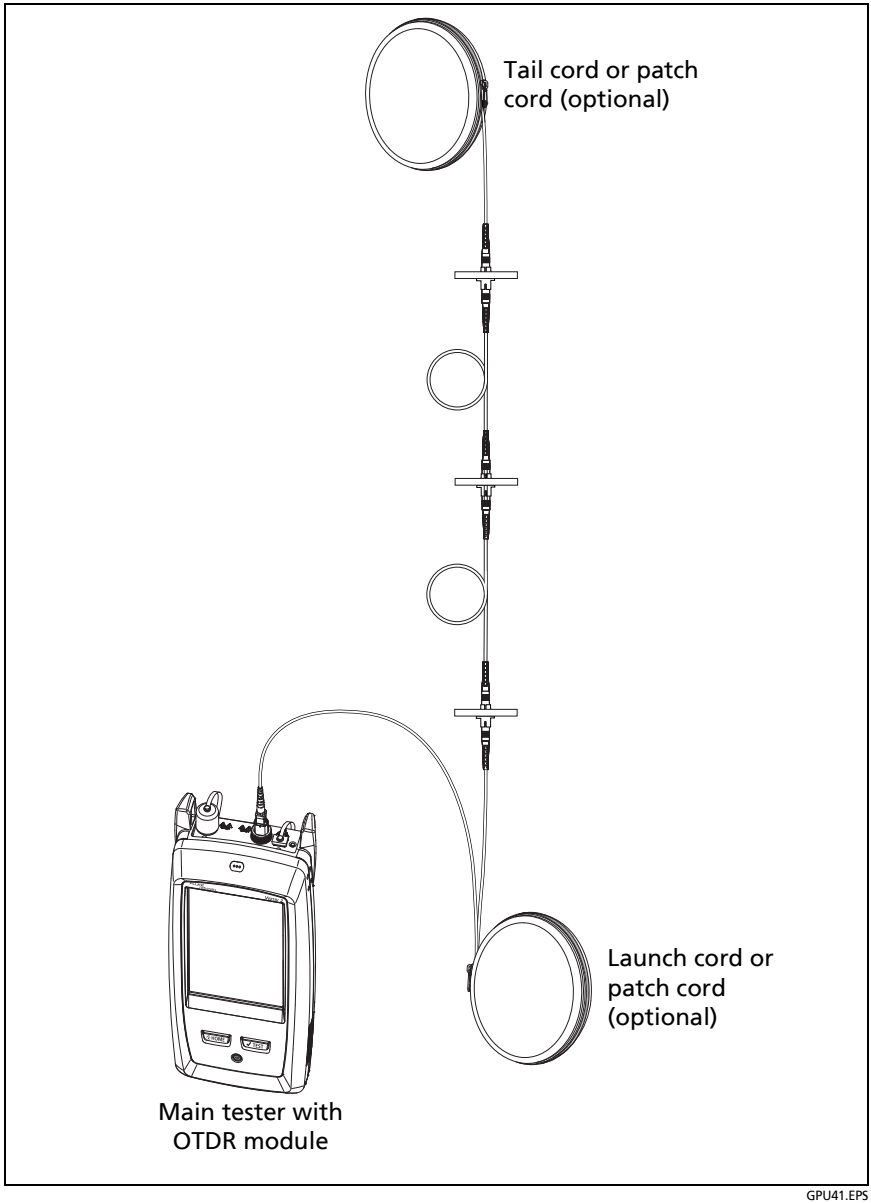

Figure 169. FaultMap Test Connections

FaultMap Screen



GPU15T.EPS

Figure 170. FaultMap Screen

Note

The FaultMap test does not use the launch compensation settings. The results show the launch and tail cords and their connectors in the same colors as other cords and connectors.

① The ID for the results. If **Auto Save** is off, **Result not saved** shows.

② : An event that has a reflectance smaller than -35 dB.

③ The length of the fiber segment between two events.

④ : An event that has a reflectance larger than -35 dB. It is possibly a connector that is dirty, poorly polished, scratched, cracked, misaligned, unseated, worn, or the wrong type.

: The arrow icon shows when there are more events that do not show on the screen. To see the events, tap the icon or scroll the screen.

⑤ Names for the ends of the link. For example, the names can describe the locations of the ends: “TELECOM” for the ends in the telecommunications closet and “OFFICE” for the ends in offices. You can enter names on the **CHANGE ID** screen. See Figure 209 on page 556.

⑥ When more than one button shows at the bottom of the screen, the tester highlights one in yellow to recommend which one to tap. See “Buttons to Do Tests and Save Results” on page 63.

⑦ If the window is blue, the reflectance of the event is smaller than -35 dB. If the window is orange, the reflectance is larger than -35 dB.

To see the window for another event, tap another icon on the fiber.

⑧ **Fiber Length**: The length of the fiber. This includes the lengths of the launch and tail cords, if you used them.

Chapter 12: The OptiFiber Pro HDR OTDR Module

Overview of the HDR OTDR Module

⚠⚠⚠Warning

Before you use the OTDR module, read the safety information that starts on page 5.

The OptiFiber® Pro HDR (High Dynamic Range) Optical Time Domain Reflectometer (OTDR) module attaches to a Versiv and Versiv™ 2 main unit to make a rugged, hand-held tester that lets you locate, identify, and measure reflective and loss events on single-mode fibers in outside plant (OSP) and premises installations. The HDR OTDR test results includes the location and performance of unpowered (passive) splitters used in PON (passive optical network) installations. A typical maximum test range is 260 km for a link with no splitters. The modules include these features:

- Automatic analysis of OTDR traces and events helps you identify and locate faults on single-mode fiber.
- Shows OTDR results as an intuitive map of events, a table of events, and an OTDR trace. PON OTDR test results include the locations and split ratios of optical splitters.
- Automatic bi-directional averaging gives you more accurate loss measurements than measurements made in one direction.
- **Document PON** test limit is available if PASS/FAIL results are not necessary.
- Event editing function lets you edit loss events. See Chapter 13.

- Span function lets you limit OTDR results to a section of fiber that you define. See Chapter 13.
- SmartLoop™ test: One test gives you OTDR results for both fibers in a link.
- DataCenter OTDR™ test gives optimal performance when you do tests on fiber installations that have short links, many connections, and possibly large reflections.
- FaultMap™ test lets you make maps of your cable plant, see patch cords as short as 0.5 m, and see events that have poor reflectance.
- Visual fault locator helps you verify the continuity of fibers and locate faults in fibers and connectors.
- Optional video probe lets you inspect fiber endfaces and save the images in test reports.

OptiFiber Pro HDR Connectors, Keys, and LEDs

Refer to Figure 171.

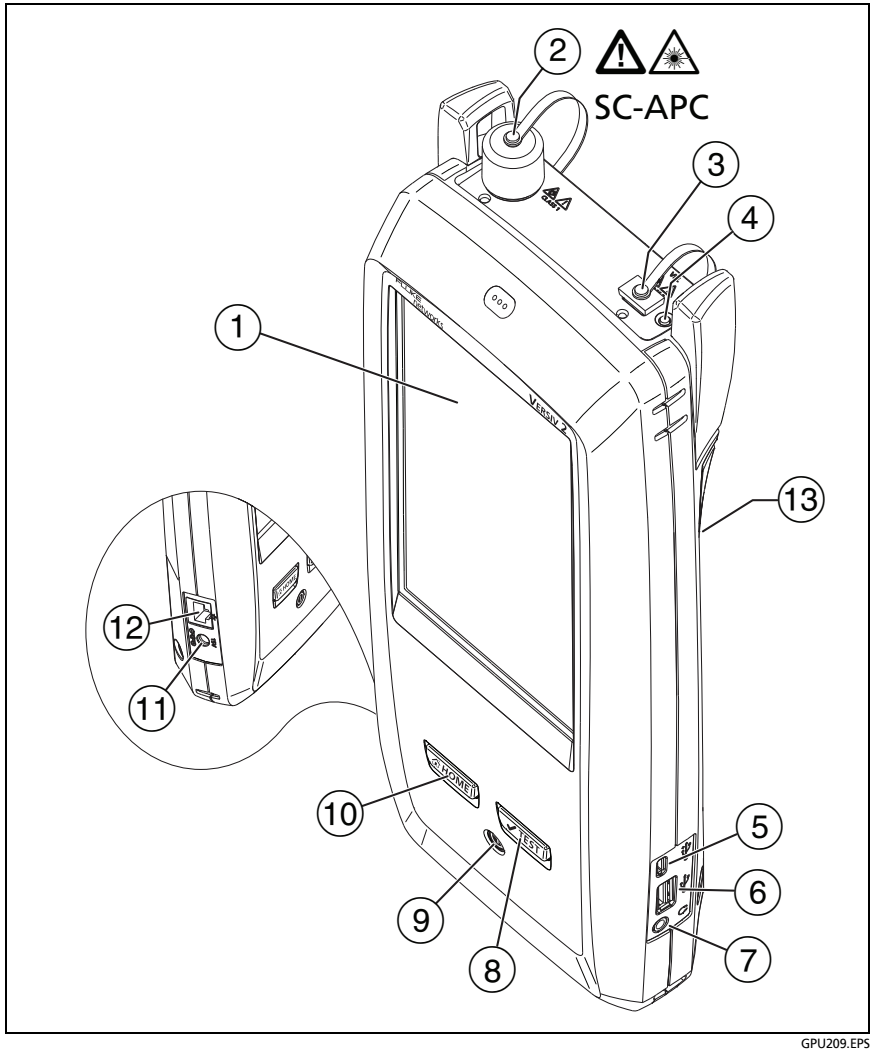

GPU209.EPS

Figure 171. Main Versiv Unit with OptiFiber Pro HDR OTDR Module (Versiv 2 with OFP-200-S1625 module shown)

① LCD display with touchscreen.

② single-mode OTDR port with an APC (angled physical contact) endface, interchangeable SC adapter, and protective cap. The LED in front of the port turns on when the port emits an optical signal.

⚠Caution

Do not connect PC or UPC connectors to the HDR OTDR port. Doing so can damage the port's APC endface, and the large reflection at the OTDR port can cause unreliable test results.

③ Visual fault locator port and protective cap. The LED in front of the port turns on when the port emits an optical signal.

⚠⚠Warning

Do not look directly into optical connectors. Some sources emit invisible radiation that can cause permanent damage your eyes.

④ Button that controls the VFL.

⑤ Micro USB port: This USB port lets you connect the tester to a PC so you can upload test results to the PC and install software updates in the tester.

⑥ Type A USB port: This USB host port lets you save test results on a USB flash drive and connect the video probe to the tester. On a Versiv main tester, this port lets you connect a Wi-Fi adapter for access to Fluke Networks cloud services. (Versiv 2 testers have an internal Wi-Fi radio.)

⑦ Headset jack.

⑧ ✔TEST: Starts a test. To start a test, you can also tap **TEST** on the display.

⑨ ⏻: Power button. Versiv 2: The LED in the power button shows the status of the battery charging process. See Table 2 on page 19.

⑩ HOME: Press HOME to go to the home screen.

⑪ Connector for the ac adapter. Versiv: The LED is red when the battery charges, and green when the battery is fully charged. The LED is yellow if the battery will not charge. See "Charge the Battery" on page 18.

⑫ RJ45 connector: Lets you connect to a network for access to Fluke Networks cloud services.

⑬ Decal with laser safety information:



How to Remove and Install the Connector Adapters

You can change the connector adapter on the OTDR port of the modules to connect to SC, ST, LC, and FC fiber connectors. You can remove the adapter also to clean the fiber endface in the port. See Figure 172.

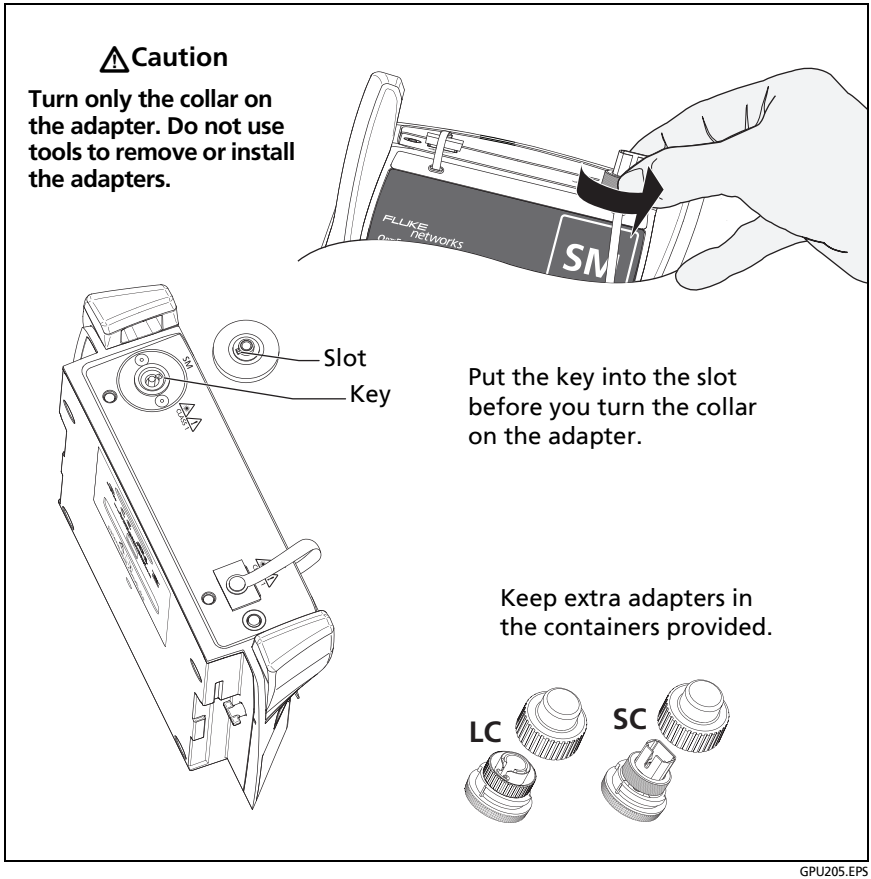

Figure 172. How to Remove and Install the Connector Adapters

The Home Screen for OptiFiber Pro HDR OTDR Modules

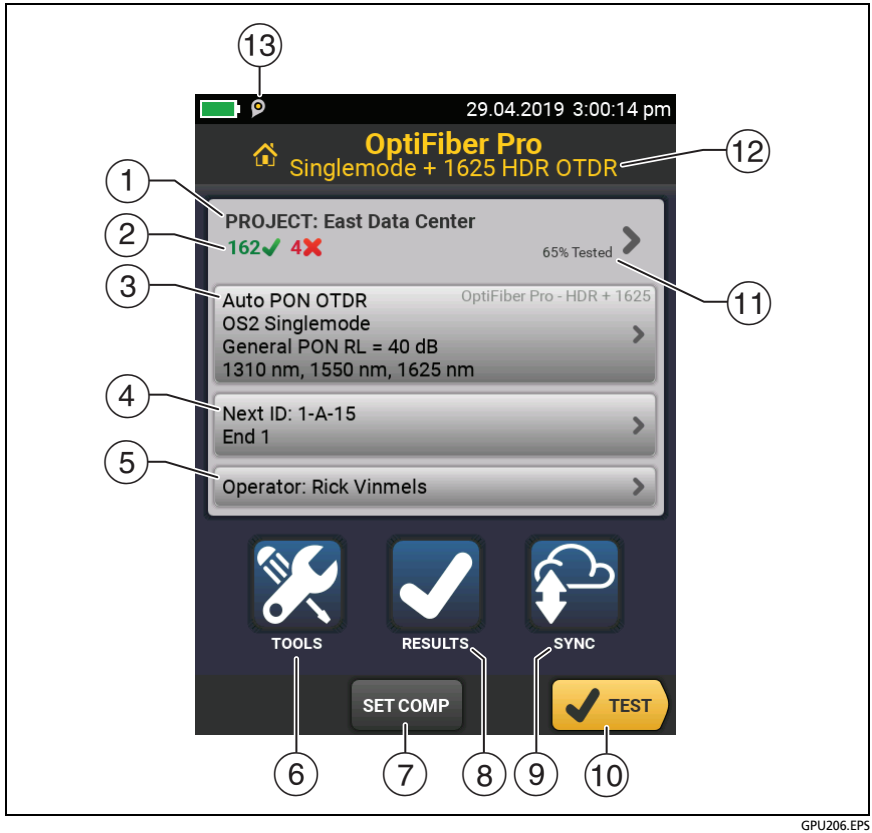

GPU206.EPS

Figure 173. The HOME Screen for OptiFiber Pro HDR Modules

① **PROJECT**: The project contains the settings for a job and helps you monitor the status of a job. When you save test results, the tester puts them in the project. Tap the **PROJECT** panel to edit the project settings, select a different project, or make a new project.

② Shows a summary of the test results in the project:

: The number of tests that passed.

: The number of tests that failed.

③ The test setup panel shows the settings the tester will use when you tap **TEST** or press TEST. The Auto PON OTDR tests lets you locate splitters on links and identifies them in the results.

To change these settings, tap the panel.

Note

You can set up tests for any module that the tester can use, even when no module is attached.

④ **Next ID**: The **Next ID** panel shows the ID that the tester gives to the next test results you save.

Tap **Next ID** to do these tasks:

- Enter an ID, select a different ID in the ID set, select a different set of IDs, or make a new set. The tester adds the IDs and ID sets you make to the project that shows on the home screen.
- Turn **Auto Save** on or off.
- Select **End 1** or **End 2** for OTDR and FiberInspector tests.
- Enter a name for **End 1** and **End 2**.

⑤ **Operator**: The name of the person who does the job. You can enter a maximum of 20 operator names. For each operator you can also enter the email address that the operator will use as an ID to sign in to LinkWare Live.

⑥ **TOOLS**: The **TOOLS** menu lets you set up the compensation function for the launch/tail cords, use tools such as the real-time trace and the FiberInspector test, see the status of the tester, and set user preferences such as the language and the display brightness.

⑦ **SET COMP**: Lets you select a launch method and set the lengths of launch and tail cords. See"About Launch and Tail Cords for OSP Links" on page 440.

⑧ **RESULTS**: Tap **RESULTS** to see and manage the results that are saved in the tester.

⑨ **SYNC**: To upload results to LinkWare Live, tap **SYNC**. See Chapter 18.

⑩ **TEST**: Tap **TEST** to do the test shown in the test setup panel.

⑪ The percentage of the tests in the project that are completed. The tester uses the number of available IDs and the tests you selected on the **CABLE ID SETUP** screen to calculate this percentage. See Figure 208 on page 554. **% Tested** does not show if your project contains only a **Next ID** list. See "To Make ID Sets with International Characters" on page 581 for more information about the **Next ID** list.

⑫ The type of module attached to the tester.

⑬  The asset management icon shows when the owner of a LinkWare Live account has enabled the asset management service for the tester. See "Sign Your Tester Out of LinkWare Live" on page 597.

About PON OTDR Tests

The HDR OTDR's **Auto PON OTDR** and **Manual PON OTDR** tests have the same settings and results as its **Auto OTDR** and **Manual OTDR** tests, with an additional feature: The PON OTDR tests can identify splitters. The **Auto PON OTDR** identifies splitters automatically. The **Manual PON OTDR** test lets you use the **SPLITTER SETUP** screen in the **Manual PON OTDR Settings** to specify the split ratios for known splitters on a link. Or, you can use the **DISCOVER** function to locate splitters and identify their ratios.

Note

*If you use the **Manual PON OTDR** test with no splitters specified, and the link has splitters, the tester identifies the splitters as large loss events.*

Settings for HDR OTDR Tests

Table 15 gives descriptions of the settings for Auto and Manual HDR OTDR tests.

The Manual settings in Table 15 apply to these tests:

- **Manual PON OTDR**
- **Manual OTDR**
- **SmartLoop OTDR (Manual)**

To set up a project, which includes the settings in Table 15, cable IDs, and operator names, see Chapter 17.

To set up an OTDR test

1. On the home screen, tap the test setup panel.
2. On the **CHANGE TEST** screen, tap an OTDR test to change, then tap **EDIT**.

   Or to set up a new OTDR test, tap **NEW TEST**.

   - If no module is installed, the **MODULE** screen shows. Tap the correct OptiFiber Pro module. Then on the **TEST TYPE** screen, tap a test.
   - If the correct module does not show on the **TEST SETUP** screen, tap **Module**, then on the **MODULE** screen tap the correct OptiFiber Pro module.
3. On the **TEST SETUP** screen, tap the panels to change settings for the test. See Table 15.
4. On the **TEST SETUP** screen, tap **SAVE** when your test setup is completed.
5. On the **CHANGE TEST** screen, make sure the button next to the test is selected, then tap **USE SELECTED**.

Note

*For all **Test Types** except **FaultMap** and **FiberInspector**, you can use the **SETUP** button on the **TRACE** screen to change some OTDR settings manually after a test. See "How to Quickly Change OTDR Settings After a Test" on page 472.*

Table 15. Settings for HDR OTDR Tests

Module	Select the OptiFiber Pro module you will use. To select a different module, tap the **Module** panel on the **TEST SETUP** screen, then tap a module.
Test Type	When you turn on the tester, the **Test Type** shows the test that was last selected. **Auto PON OTDR**: The tester automatically selects settings that give you the best view of the events on PON links. The tester automatically uses the **DISCOVER** function to locate splitters and identify their ratios. This mode is the easiest to use and is the best choice for most applications. To see the settings the tester used for a test, tap **SETUP** on the trace screen, then tap **CURRENT**. *Note* *For links that have splitters with 1:64, 2:64, 1:128, or 2:128 ratios, use a **Manual PON OTDR** test.* **Manual PON ODTR**: This mode lets you select settings to control the test parameters for the trace. You can also enter the ratios of splitters that you know are on the link, or use the **DISCOVER** function to locate splitters and identify their ratios. If you do not enter splitter ratios, the tester identifies splitters as large loss events. Manual settings are described in this table. (continued)

Table 15. Settings for HDR OTDR Tests (continued)

Test Type (continued)	**Auto OTDR**: This is the same as the **Auto PON OTDR** test, except that the tester does not identify splitters. If the link has splitters, the tester identifies them as large loss events. *Note* *Some unusual faults can cause the **Auto OTDR** test to show an unsatisfactory trace. If this occurs, use the **Manual OTDR** test to get a better trace.* **Manual OTDR**: This is the same as the **Manual PON OTDR** test, except that the tester does not identify splitters. If the link has splitters, the tester identifies them as large loss events. Manual settings are described in this table. **DataCenter OTDR**: This test is optimized for fiber installations that have short links, many connections, and the possibility of large reflections. The maximum range for this test is 5 km for single-mode. For more details on DataCenter OTDR settings, see "OptiFiber Pro DataCenter OTDR Specifications" on page 657. *Notes* *By default, the **DataCenter OTDR** test uses 1310 nm for single-mode fiber. This wavelength is typically used in data centers. You can select other wavelengths if necessary.* *If you use only one wavelength, the **Macrobend Detection** function will not identify bends.* *You must use launch compensation when you do a **DataCenter OTDR** test.* **FaultMap**: The FaultMap test can show connections that do not show on the OTDR EventMap and connections that are poor because they have high reflectance. See "The FaultMap Test" on page 485. **SmartLoop OTDR (Auto)** and **SmartLoop OTDR (Manual)**: The SmartLoop test lets you connect the far ends of the two fibers in a link so that one OTDR test gives you results for both fibers. The Auto and Manual settings operate the same as for the OTDR test. See "The SmartLoop Test" on page 491. (continued)

Table 15. Settings for HDR OTDR Tests (continued)

Test Type (continued)	**FiberInspector**: The FiberInspector test lets you use an optional FI-1000 FiberInspector or FI-3000/FI-3000-NW FiberInspector Pro video probe to inspect the endfaces in fiber optic connectors.
Manual Settings, PON OTDR only: **Splitter Setup**	**Splitter Ratios**: Enter the ratios for up to three splitters. You can enter ratios of **1x2** to **1x128** and **2x2** to **2x128**. The tester uses the ratios to estimate how the loss and other effects of the splitter will affect the OTDR test results. If you do not enter ratios, the tester identifies splitters as large loss events. **DISCOVER**: When you tap **DISCOVER**, the tester looks for splitters on the fiber and uses their losses to identify their ratios.
Manual Settings: **Range**	The **Range** is the maximum distance shown on the trace. Select the range that is nearest to, but not less than, the distance to the event you want to examine. If the tester does not correctly identify the end event, select the next higher range, then do the OTDR test again. **Auto**: The tester selects a range that gives the best possible view of the events on the fiber. The range is not limited to the fixed ranges provided. For the manual SmartLoop OTDR test, the maximum range setting applies to the longest fiber in the pair, including the loopback and launch/tail fibers. The maximum setting is 60 km for single-mode.

(continued)

Table 15. Settings for HDR OTDR Tests (continued)

Manual Settings: **Pulse Width**	Adjust the pulse width to a wider setting to see farther down the fiber or to a narrower setting for better resolution. Narrower pulses let you see more detail in and around reflective events and help you see events that are close together (hidden events). But narrower pulses reduce the range of the OTDR and make traces that have more background noise between events. When you use narrower pulses, small loss events can possibly be hidden in the noise on the trace. Wider pulses increase the backscatter level, which gives a better signal-to-noise ratio around non-reflective events. This helps you see smaller loss events and measure their loss more accurately, but increases the dead zones of events. Wider pulses can also hide small reflections. **Auto**: The tester selects the narrowest pulse that still lets you see loss events.
Manual Settings: **Averaging Time**	The averaging time is the time the tester uses to make measurements and calculate averages of the measurements. **Auto**: The tester adjusts the test settings to give a good view of events on the trace while it keeps the test time to a minimum. **Quick Test:** The tester adjusts the test settings to keep the test time to a minimum. This setting decreases accuracy, increases dead zones, and can give a trace that shows fewer details. Use this setting to do a test quickly when it is not necessary to see small details on the trace. A **Quick Test** can possibly take up to 3 minutes if the fiber length is near the maximum range for the tester for the selected pulse width. *Note* *The **Quick Test** may not give good results for links with splitters that have ratios greater than 1:4. The tester may need long test times to give good results on such links.* (continued)

Table 15. Settings for HDR OTDR Tests (continued)

Manual Settings: **Averaging Time** (continued)	**Best Resolution**: The tester adjusts the test settings to keep dead zones to a minimum. This setting lets you see more events in and around reflective events. The test usually takes longer than a test with **Auto** or **Quick Test** selected. Tests with **Auto** or **Best Resolution** selected can take up to 3 minutes per wavelength for some fibers. **3, 5**, **10**, **20**, **40**, **60**, **90**, **120**, and **180 seconds per wavelength**: Longer times give these results: • The trace has less noise, which increases the dynamic range and increases the accuracy of measurements. • You can see small events, such as splices, more clearly on the trace. • The tester makes more measurements, so the test takes more time. Shorter times give these results: • The trace has more noise, which decreases the dynamic range. • The increased noise hides small events on the trace. • The tester makes fewer measurements, so the test takes less time.
Manual Settings: **End Threshold**	Lets you set the threshold (in decibels) for detection of the end of the fiber. An event that is above the threshold is shown as the end of the fiber. The range for this setting is 1 dB to 30 dB inclusive. *Note* *If the loss of a splitter is more than the **End Threshold**, the tester identifies the splitter as the end of the fiber.* To set the threshold to **Auto**, tap **Auto** on the **END THRESHOLD** screen. For the SmartLoop OTDR test, the **End Threshold** is for unconnected end of the tail fiber (not for each fiber).

(continued)

Table 15. Settings for HDR OTDR Tests (continued)

Manual Settings: **Loss Threshold**	Lets you set the threshold (in decibels) for loss (non-reflective) events. Events at or above the threshold are included in the event table. The range for this setting is 0.01 dB to 1.50 dB inclusive. When you select smaller threshold values (0.01 dB to 0.3 dB), the tester makes a trace with less noise. To do this, the tester makes more measurements to be averaged or uses wider pulse widths. Thus, smaller values can possibly increase test times or dead zones. **Auto** sets the threshold to a value based on the selected test limit, usually 0.10 dB. To set the threshold to **Auto**, tap **Auto** on the **LOSS THRESHOLD** screen. *Notes* *When you set a loss threshold, you cannot be sure that the tester will find all events that are at or above the threshold. The characteristics of the fiber and the use of a manual **Averaging Time** or **Pulse Width** can possibly reduce the number of events the tester finds.* *If you set the loss threshold to less than 0.1 dB, the tester can possibly find many false events caused by imperfections in the fiber.*

(continued)

Table 15. Settings for HDR OTDR Tests (continued)

Manual Settings: **Macrobend Setup**	Enter the threshold for the difference in an event's loss between the two wavelengths shown. To identify a loss event as a bend, the tester compares the event's loss at two wavelengths, such as 1310 nm and 1550 nm. If the loss is more at the longer wavelength and is more than the macrobend threshold, the tester identifies the event as a bend. The default threshold for the loss difference is 0.50 dB. If the tester does not show a bend, and you suspect that a bend is increasing the attenuation of a link, you can decrease the threshold to look for bends that have a larger radius. In some cases, the tester can falsely identify a bend when other events cause a larger loss at longer wavelengths. For example, a group of hidden events can cause a larger loss at longer wavelengths. In this case, you can increase the macrobend threshold to keep the bend event out of your results. To use the bend detection function, make sure that **Macrobend Detection** on the **TEST SETUP** screen is set to **On**.
Bi-directional	This setting shows only if you select **SmartLoop OTDR (Auto)** or **SmartLoop OTDR (Manual)** for the **Test Type**. **Off**: The tester does the SmartLoop test in only one direction. **On**: The tester does the SmartLoop test in both directions and automatically calculates bi-directional averages of loss. See "Bi-Directional SmartLoop Tests" on page 498. *Note* *The tester will not calculate bi-directional averages for test results that include splitters.*

(continued)

Table 15. Settings for HDR OTDR Tests (continued)

Launch Compensation	Tap the control to turn the launch compensation function on or off. See "About Launch and Tail Cords for OSP Links" on page 439. This setting does not show for the SmartLoop test because it is always enabled for that test.
Macrobend Detection	**On**: The tester identifies bends. For the **Auto OTDR** test, the threshold for the loss difference is 0.50 dB. To use a different threshold, set up a **Manual OTDR** test. See "Macrobend Setup" above in this table or "Macrobend Setup" on page 436. This setting is **On** by default. *Note* *A bend always causes a **FAIL** result. If you want a **PASS** result for a link that has a bend, turn off **Macrobend Detection**.* **Off**: The tester does not identify bends. Bends show as loss events in the results.
Wavelength	Select the wavelengths you want to use. You can do tests at one or all of the wavelengths supported by the module you selected. The **FaultMap** and **FiberInspector** tests do not have this setting. **⚠Caution** **To avoid disruption of service, use only 1625 nm when you do tests on live fibers.** *Note* *If you use only one wavelength, the **Macrobend Detection** function will not identify bends.*
Fiber Type	Select a fiber type that is correct for the type you will test. To see a different group of fiber types, tap **MORE**, then tap a group. To make a custom fiber type, see Chapter 19.

(continued)

Table 15. Settings for HDR OTDR Tests (continued)

Fiber Type Settings	**IOR**: The tester uses the index of refraction to calculate the optical length of the fiber. Optical length usually differs slightly from the length of the fiber jackets in a link. This occurs because fibers are often curved inside their jackets and because there are small variations in the IOR of the fibers. Each fiber type includes a default value, which is the IOR specified for the fiber by the manufacturer. To use a different IOR, make a custom fiber type. See Chapter 19. *Note* *If you use a length-based test limit, the* **IOR** *value has an effect on the loss limit that the tester calculates. See "OTDR Settings for Limits that Calculate a Loss Limit" on page 439.*
Fiber Type Settings (continued)	**Backscatter**: Backscatter is the backscatter coefficient. This is a measurement of the quantity of light that the fiber reflects back to the OTDR when the OTDR uses a 1 ns pulse. The tester uses this value to calculate the reflectance of events for OTDR tests and the overall ORL for the link. Each fiber type includes a default value, which is the backscatter coefficient specified for the fiber by the manufacturer. To use a different backscatter value, make a custom fiber type. See Chapter 19.
Test Limit	Select the correct test limit for the job. Generic limits, such as **General PON** and **Document PON**, let you do tests when no industry-standard limit is applicable and you do not want to make a custom limit. These limits are in the **Miscellaneous** group. To see a different group of limits, tap **MORE**, then tap the name of a group. To make a custom test limit, see Chapter 19. Some test limits use the measured length of the fiber to calculate a limit for loss. See "OTDR Settings for Limits that Calculate a Loss Limit" on page 439.
Test Limit Settings	This item shows only if the selected test limit calculates a loss limit for each link. For such limits, enter the number of connectors and splices in the link. See Table 16 on page 439.

OTDR Settings for Limits that Calculate a Loss Limit

Some test limits do not specify a limit for overall loss. They specify maximum values of loss per kilometer of fiber and for the connectors and splices in the link. Then, the tester uses the measured length of the link, the number of connectors in the link, and the number of splices in the link to calculate a loss limit for that link.

When you select such a limit, you must enter the number of connectors and splices that are in the link. To enter these values, tap **Test Limit Settings** on the **TEST SETUP** screen. See Table 16.

Note

***Test Limit Settings** shows on the **TEST SETUP** screen only if the selected test limit calculates a loss limit for each link. For example, **Test Limit Settings** shows when you select the limit ISO/IEC 14763-3.*

Table 16. Settings for Test Limits that Use Length to Calculate a Loss Limit

Number of Connectors*	Enter the number of connectors that are in the link. If you do not use launch and tail cords, do not include the first and last connectors. If you use only a launch cord, include the first connector, but not the last connector.
Number of Splices*	Enter the number of splices that are in the link.

* For the SmartLoop OTDR test, the settings apply to each fiber in the link. Enter the number of connectors and splices for one of the fibers in the link. For example, if there are no connectors between the launch and loopback fibers, the **Number of Connectors** is 2.

About Launch and Tail Cords for OSP Links

Launch and tail cords are often not necessary for OTDR tests on outside plant installations. This is because most of the insertion loss and return loss of long links is caused by the fiber. The connectors on the ends of a long link add very little to the total losses, so it is often not necessary to use launch and tail cords to include the losses of those connectors in the results.

You should however keep a patch cord connected to the OTDR port. Use the patch cord, with an adapter if necessary, to connect the OTDR to links. The patch cord protects the module's connector from the wear caused by repeated connections to the OTDR port.

It may be necessary to use launch and tail cords in these situations:

- The OSP link is short, and you need to see events near the beginning or end of the fiber.
- The tester cannot find the end of an unconnected fiber that has an APC connector. This can occur because APC connectors cause very small reflections. OTDRs expect a large reflection at the end of a fiber, so sometimes the OTDR will not find the end of a fiber. In this situation, connect an APC/UPC tail cord or a patch cord to the APC connector to cause a large reflection at the end of the fiber.
- The customer's requirements specify the use of launch and tail cords.

If you must use launch and tail cords, you can use the tester's launch compensation function to remove the losses, lengths, and attenuation coefficients of the launch and tail cords from overall OTDR results. The compensation function does not remove the losses of the connections at the launch and tail cords.

To use the launch compensation function

1 On the home screen, tap **SET COMP**.

2 Select a launch method, make the connections shown on the screen, then tap **SET**.

When you use launch and tail cords that have APC connectors, it is possible that the tester will not find the connectors when you try to set up the launch compensation function. If this occurs, enter the lengths of the launch and tail cords manually.

For details on the launch compensation function, see "How To Compensate for Launch and Tail Cords" on page 342.

OTDR Port Connection Quality

When you do an OTDR test, the test shows the quality of the OTDR port connection (Figure 174). If a test takes more than approximately 3 seconds, the **PROGRESS** screen also shows a preview of the OTDR trace. The trace is black for one wavelength and blue for the other wavelength.

If the Gauge is Not in the Good Range

- Clean the OTDR port and the fiber connector. Use a video probe to inspect the endfaces in the port and fiber connector for scratches and other damage. If an endface on the tester shows damage, contact Fluke Networks for service information.
- If the gauge stays outside the **Good** range, remove the adapter from the module and inspect the adapter for damage. Make sure that the white plastic ring inside the center tube shows no damage.

A poor OTDR connection increases the dead zone at the connector. The dead zone can hide faults that are near the OTDR connector.

A poor connection also decreases the strength of the signal from the OTDR. The weaker signal causes more noise on the trace, which can cause the OTDR to miss events. It also decreases the dynamic range.

When the test is completed, the quality gauge shows in the details for the **OTDR Port** event on the EventMap screens. The tester includes the gauge with the test results you save.

Port Connection Quality for SmartLoop Tests

For SmartLoop tests, the **OTDR Port** connection for the second fiber is the input connector of the loopback cord. See Figures 193 on page 496 and 195 on page 503. If the tester shows a message about the connection quality of the OTDR port, but the OTDR connection on the tester is good, inspect the ends of the loopback cord.

“STOP” Button for Manual Tests

When a trace shows on the **PROGRESS** screen for a manual OTDR test with multiple wavelengths, you can tap the **STOP** button to stop the OTDR test at the current wavelength and start the test at the next wavelength. This lets you control the time the tester takes to give OTDR results. You can stop the test to get results more quickly, but the results are possibly less accurate.

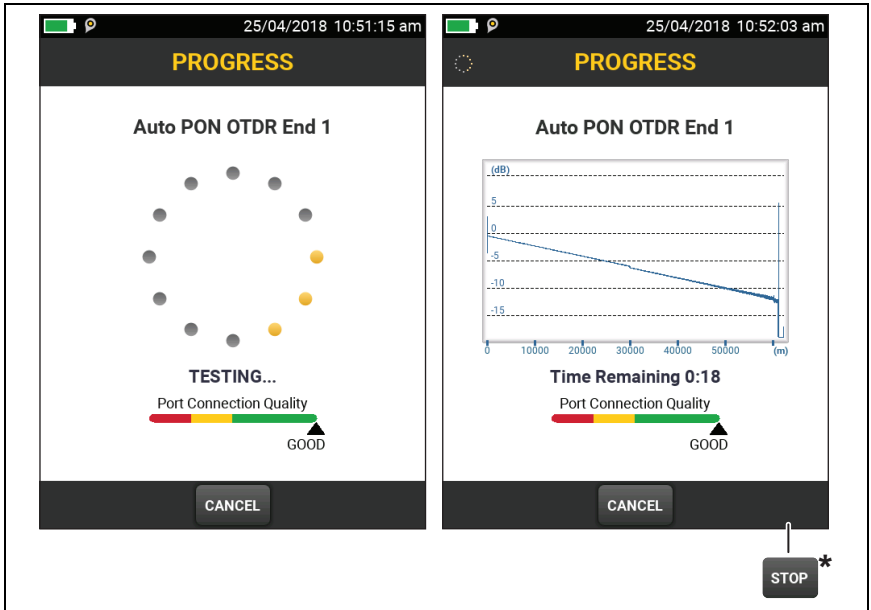

GPU228.EPS

Figure 174. The OTDR Port Connection Quality Gauge and Progress Screen

How to Do an HDR OTDR Test

Figure 175 shows the equipment for HDR OTDR tests.

1. Make sure that the home screen shows the correct settings for the job.
2. Set up the launch compensation function if necessary. See "About Launch and Tail Cords for OSP Links" on page 440.
3. Clean and inspect the connectors on the launch and tail cords and the fiber to be tested.
4. Connect the tester to the link as shown in the Figures:
   - Figure 176 shows the connections for **PON OTDR** tests on OSP links where you typically do not use launch or tail cords.
   - Figure 177 shows connections that include launch and tail cords.
   - Figure 178 shows connections to do a test on a complete, as-built PON network.
5. Tap **TEST** or press TEST.

Notes

If the tester does not find the end of the fiber, connect an APC/UPC tail cord or a patch cord to the APC connector to cause a large reflection at the end of the fiber.

The tester shows a warning if there is an optical signal on the fiber.

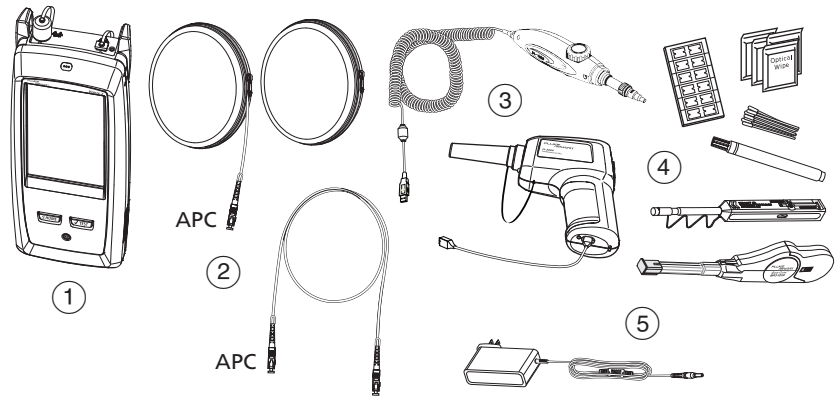

1. Main tester with HDR OTDR module installed
2. Launch and tail cords. (optional for PON tests) or a patch cord. Match the fiber to be tested. Cords must have an APC connector at one end for the HDR OTDR port.
3. FI-1000 or FI-3000 video probe with USB connector
4. Fiber cleaning supplies
5. AC adapter (optional)

⚠Caution

Do not connect PC or UPC connectors to the HDR OTDR port. Doing so can damage the port's APC endface, and the large reflection at the OTDR port can cause unreliable test results.

Figure 175. Equipment for HDR OTDR Tests

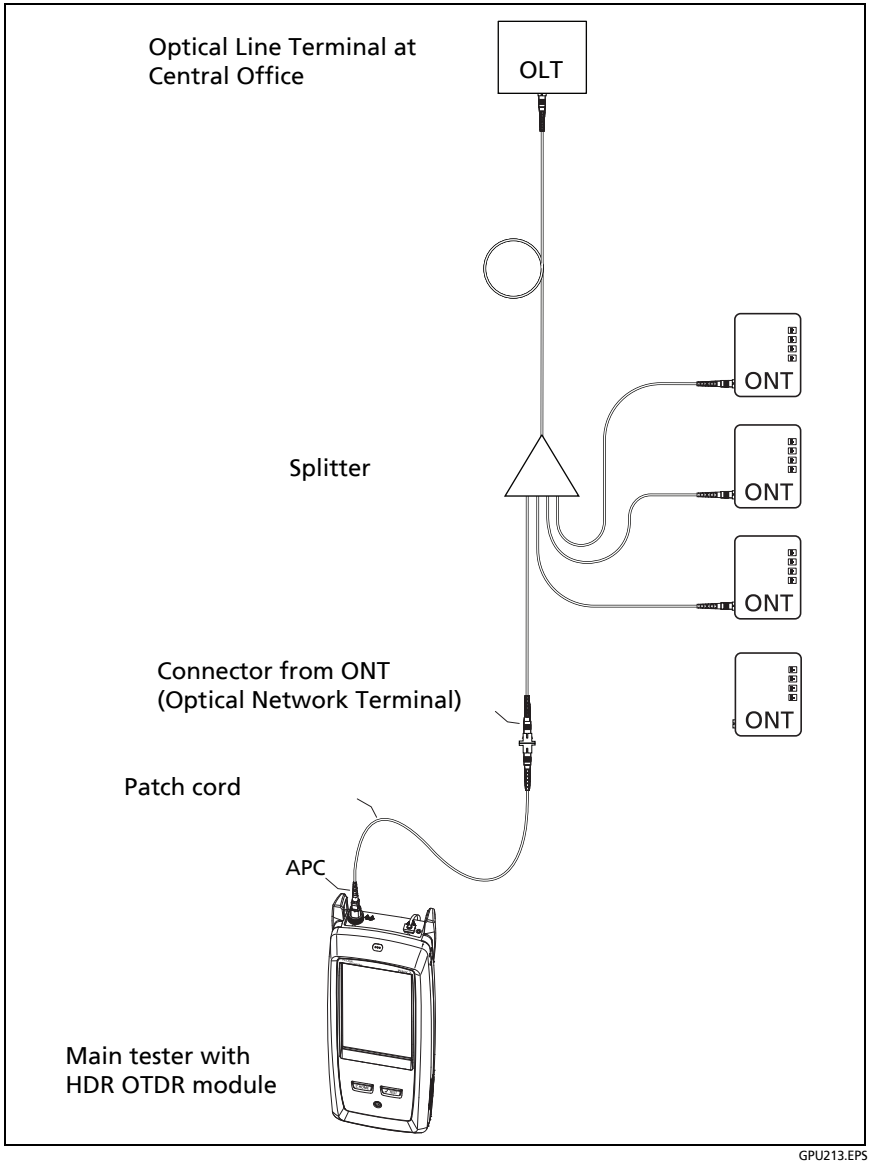

Figure 176. Typical Connections to an Out-of-Service PON Link

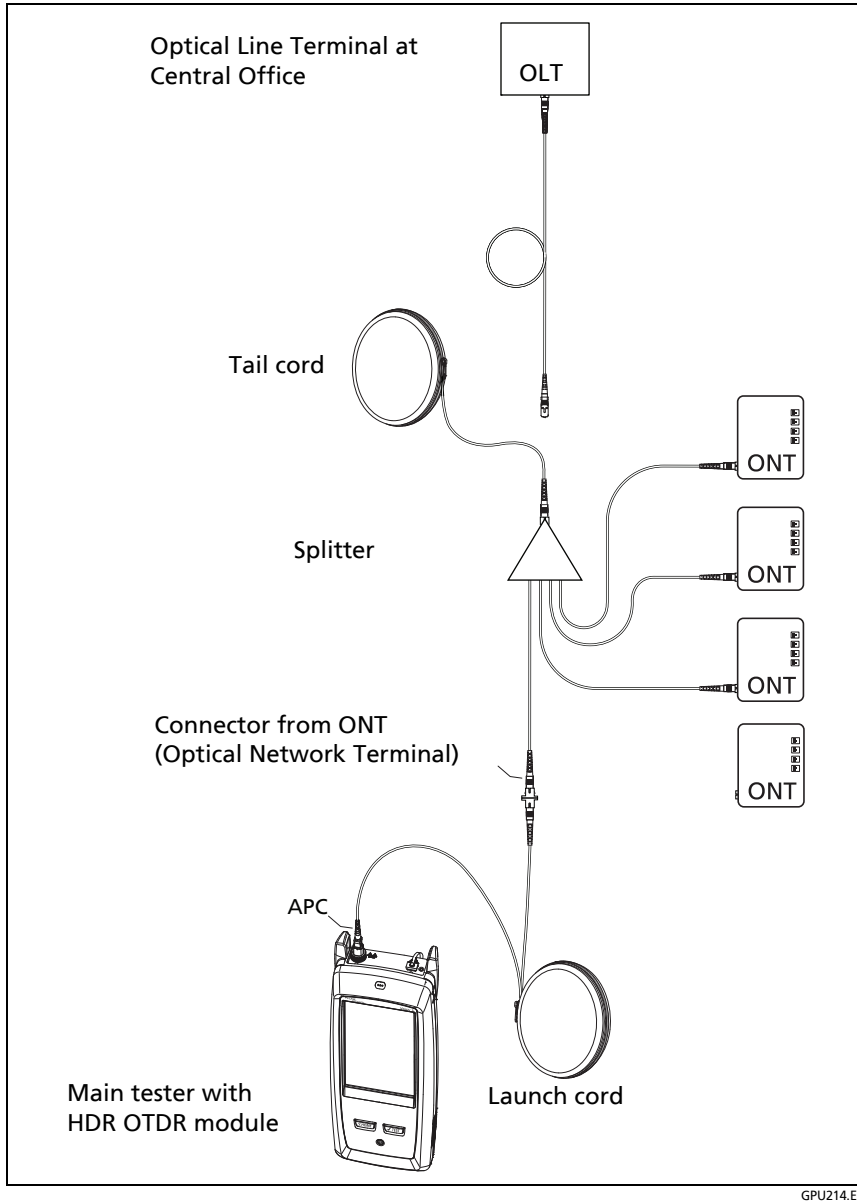

GPU214.EPS

Figure 177. HDR OTDR Connected with Launch and Tail Cords

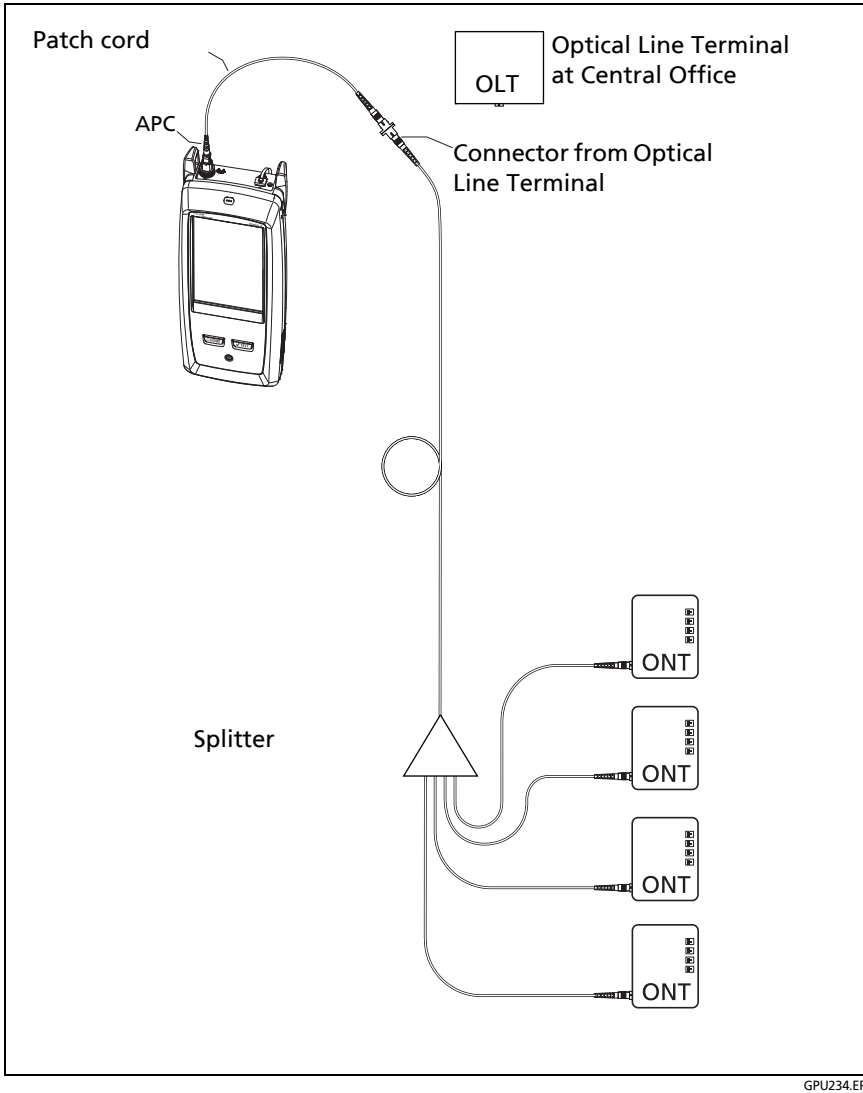

Figure 178. Typical Connections to Characterize As-Built PON Links

HDR OTDR Results

Notes

The tester shows measurements with ">" or "<" when the actual value is possibly more or less than the value shown. For example, this can occur for hidden events or for measurements that are out of the range of the tester.

*When a test is completed, the type of screen the tester shows first (**EventMap**, **TABLE**, or **TRACE**) is the type you looked at last.*

EventMap

The EventMap shows a diagram of the events on the fiber. Figure 179 shows an EventMap for an **Auto PON OTDR** test result. For more information on events, see Table 17 on page 457.

Notes

The EventMap combines the results for all wavelengths used for the test. If an event on the EventMap does not show on the OTDR trace, change the wavelength on the OTDR screen.

The EventMap does not show ghosts.

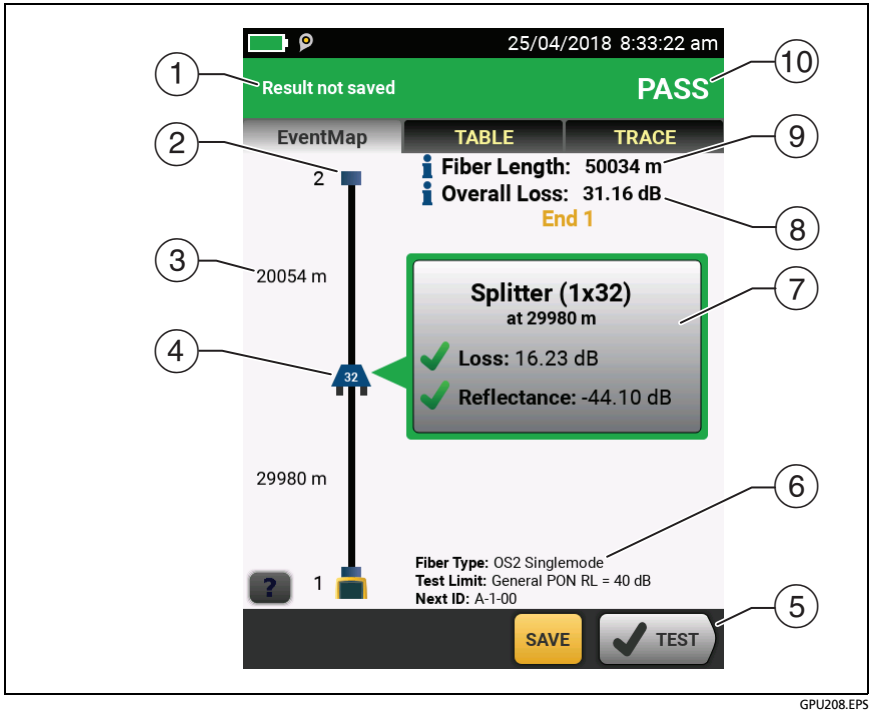

GPU208.EPS

Figure 179. EventMap for an HDR OTDR Test Result

① The ID for the results. If **Auto Save** is off, **Result not saved** shows.

② The end of the fiber.

: Launch and tail cords (when used) and their connectors show in gray. The map shows these if **Launch Compensation** is on and the cords are connected.

③ The length of the fiber segment between two events.

④ Icons show events on the fiber (to see many of these icons on EventMap screens, see Figures 151 on page 360 and 152 on page 363):

Reflective events:

: A reflective event, which is usually a non-APC connector. Measurements for the event are all within the test limits.

: One or more measurements for the event exceeds the limit. This event could also be a **Ghost Source**.

Non-reflective loss events:



: A splitter. The number on the splitter shows the split ratio.

: An APC connector or a splice. Measurements for the event are all within the test limits. If the event has negative loss, it is a **Gainer**. See page 463.

If **Macrobend Detection** is **Off**, this could be a bend. If the event is a bend, and **Macrobend Detection** is **On**, the EventMap shows the bend icon.

: One or more measurements for the event exceeds the limit.

: A bend with loss that exceeds a macrobend threshold. If **Macrobend Detection** is **Off**, the EventMap shows the blue circle shown above.

Note

*A bend always causes a **FAIL** result. If you want a **PASS** result for a link that has a bend, turn off **Macrobend Detection**.*

Hidden events:

: The event is hidden by a previous event.

The map shows a dotted line around hidden events and the event that causes them to be hidden. The tester combines the loss of all the events that are in the dotted line. To see the combined loss, tap the event that causes the hidden event. (④). The tester does not show loss measurements for hidden events. See **HIDDEN** on page 461.

: The event is hidden by a previous event. The reflectance of the event exceeds the limit. This icon shows only when the test limit has a limit for reflectance.

The cause of the hidden event. The loss of the second connector is hidden in the attenuation dead zone of the first connector.

⑤ When more than one button shows at the bottom of the screen, the tester highlights one in yellow to recommend which one to tap. See “Buttons to Do Tests and Save Results” on page 63.

⑥ The fiber type and test limit the tester used for the test, and the ID the tester will use for the next results that you save.

⑦ When a test is completed, the window shows information for the event that has the worst measurement. The information windows show the worst results of the wavelengths used for the test.

If the window border is green, the measurements for the event do not exceed the limits.

If the window border is red, a measurement exceeds the limits.

If the window border is blue, the tester does not give a pass or fail result to the event because it cannot do a full analysis of the event. This occurs for **OTDR Port**, **Hidden**, and **End** events. This occurs for all events if you use the **Document PON** test limit because **Document PON** does not have values for limits.

When you use a test limit that has a reflectance limit, **Hidden** events show a fail status if their reflectance exceeds the limit.

❌: The measurement exceeds the limit.

✔: The measurement is within the limit.

To see details for the event, tap the window. See Figure 182 on page 468.

To see information for another event, tap another icon on the map.

⑧ **Overall Loss**: The loss of the cabling. This does not include the OTDR connection and the loss of the last event. If **Launch Compensation** is on, the overall loss includes the launch and tail connectors, but not the launch and tail fibers.

If you did the test at two wavelengths, the tester shows the highest loss of the two wavelengths.

N/A shows for the **Overall Loss** if the tester cannot measure the loss. This can occur when events are too close together or when there is a large reflective event near the end of the fiber.

⑨ **Fiber Length**: The length of the fiber. The units show in meters (**m**) or feet (**ft**). If **Launch Compensation** is on, the length does not include the length of the launch and tail cords.

⑩ **PASS/FAIL**: The overall result for the fiber.

- **PASS**: All measurements are within the test limits.
- **FAIL**: One or more measurements exceed the limit.

Event Table

The event table shows a list of the events on the fiber. To see the event table, tap **TABLE** on the OTDR results screen. Figure 180 shows an example of an event table. Table 17 gives descriptions of the event types.



GPU222.EPS

Figure 180. Event Table from an HDR OTDR Test

① To see details for an event, tap the event in the table. Scroll the table if necessary to see all the events.

- **(ft)** or **(m)**: The distance to the event
- **LOSS**: The loss of the event.
- **REFLECT**: The reflectance of the event.
- **TYPE**: The event type. See Table 17. This is the type that best matches the characteristics of the event at all wavelengths. It can be different from the event type shown on the OTDR plot, which is the type for each wavelength.

Notes

*The **OTDR Port** and **End** events always show **N/A** for loss because backscatter measurements are not available on both sides of those events.*

*If an event shows "---" in the **LOSS** and **REFLECT** columns, the tester did not find the event at the selected wavelength. Tap an arrow button (⑤) to see the measurements for the other wavelength.*

② Tap ? to see help for this screen.

③ **OVERALL**: Tap this button to see overall measurements of length, loss, and optical return loss for the fiber.

④ When more than one button shows at the bottom of the screen, the tester highlights one in yellow to recommend which one to tap. See "Buttons to Do Tests and Save Results" on page 63.

⑤ If the tester made measurements at two wavelengths, tap the arrow buttons to see results for the other wavelength. Possibly, some events show only at one wavelength.

⑥ The icons show the overall status of the event at all wavelengths. This can be different from the event status shown on the OTDR plot, which is the status for each wavelength.

: The measurement is within the limit.

: The measurement exceeds the limit.

: The tester does not give a pass or fail result to the event. This occurs for **OTDR Port**, **Hidden**, and **End** events. This occurs for all events if you use the **Document PON** test limit because **Document PON** does not have values for limits.

When you use a test limit that has a reflectance limit, **Hidden** events show a **FAIL** status if their reflectance exceeds the limit.

To see details for an event, such as limits for measurements and the **SEGMENT ATTENUATION** coefficient, tap the event in the table.

Table 17. Event Types in the Event Table

Event	Description
Reflection A pulse of light reflected back to the OTDR.	Reflections are caused by a connector, a tight bend, a mechanical splice, or a crack in the fiber. Reflective events can possibly be ghost events. These are frequently smaller than reflective events that are connectors. If the reflection is not caused by a connector, inspect the cable for tight bends or damage. Use a visual fault locator to verify the fault.

(continued)

Table 17. Event Types in the Event Table (continued)

OTDR Port The connector on the OTDR.	This event is the OTDR port on the tester. The **OTDR Port** event always shows **N/A** for loss because backscatter measurements are not available on both sides of the event. For SmartLoop tests, the **OTDR Port** event for **Fiber B** is the near end of the loopback cord. For the second part of a bi-directional test, the **OTDR Port** event for **Fiber A** is the near end of the loopback cord. See Figures 193 on page 496 and 195 on page 503. The tester does not give a **PASS/FAIL** status to this event.
Launch The end of the launch cord. **Tail** The start of the tail cord.	The tester identifies these events if you connected launch and tail cords and turned on **LAUNCH COMPENSATION** on the **TEST SETUP** screen. See "About Launch and Tail Cords for OSP Links" on page 439.

(continued)

Table 17. Event Types in the Event Table (continued)

Loss An event where the level of reflected light suddenly decreases, and the reflection from the event is too small to measure.	Caused by a splice, bend, splitter, or a low-reflectance connection, such as an angled physical contact (APC) connection. You can use the **Change Event Type** menu to edit loss events. See "How to Edit a Loss Event" on page 507. You can use the **OTDR Trace Viewer** in LinkWare PC to label loss events as splices, APC connectors, or splitters. The tester uses the loss limit for a splice (typically 0.30 dB) to give a **PASS** or **FAIL** result to a loss event. A good APC connection that has a higher loss than a splice will have a **FAIL** result. To change this result to a **PASS**, use LinkWare PC to edit the event in the **OTDR Trace Viewer**. If the loss event is not caused by a splice or APC connection, inspect the cable for tight bends, especially if the loss is more at a higher wavelength. If **Macrobend Detection** is **On** tester can identify bends. For PON OTDR tests, the tester can identify splitters, which show as large loss events. When the tester uses a narrower pulse width, some loss events can show as reflective events.
Bend A loss event that the tester identifies as a bend in the fiber.	The tester identifies loss events as bends when these three conditions are true: • The event has more loss at higher wavelengths. • The difference between the losses at two wavelengths (such as 1310 nm and 1550 nm) is more than the macrobend threshold. See "Macrobend Setup" on page 436. • **Macrobend Detection** is **On**. If it is **Off**, the tester shows bends as loss events.

(continued)

Table 17. Event Types in the Event Table (continued)

Splitter A passive splitter in a PON link.	The number on the icon shows the split ratio. The tester identifies splitters when you do an **Auto PON OTDR** test or a **Manual PON OTDR** test with splitters selected in the **Manual PON OTDR Settings**. For other types of tests, splitters show as large loss events.
End The end of the fiber or a loss greater than the end threshold.	The **End** event always shows **N/A** for loss because backscatter measurements are not available on both sides of the event. For SmartLoop tests, the **End** event for **Fiber A** is the far end of the loopback cord. The tester does not give a **PASS/FAIL** status to this event, unless you use a custom test limit that includes a limit for segment attenuation, and the segment before the **End** event fails.
Hidden End The end of the fiber is in the attenuation dead zone of the previous event.	The tester cannot give an accurate distance to the end of the fiber because the end is hidden. The tester does not give a **PASS/FAIL** status to this event.

(continued)

Table 17. Event Types in the Event Table (continued)

Hidden The event is in the attenuation dead zone of the previous event.	The tester detected the event, but does not have enough information to measure its loss separately from the previous event. Thus, the tester includes the loss of the hidden event with the loss of the previous event. The loss of the hidden event shows as **N/A**. A hidden event is often the end of a patch cord that is hidden in the dead zone made by the first connector on the cord. To get a better view of hidden events, do a **Manual OTDR** test with the **Averaging Time** set to **Best Resolution**. Narrow pulse widths can also help you see hidden events. If the event is not a connection, inspect the fiber near the location of the event. Use a visual fault locator to see faults such as cracks or breaks in the fiber. Ghosts anywhere on the fiber and splices near the end of the fiber can also cause hidden events. The tester does not give a **PASS/FAIL** status to this event, unless the test limit has a limit for reflectance and the hidden event exceeds the limit.
Ghost (Also known as an "echo".) The event is a copy of another reflection. It is caused by light bouncing back and forth between connectors. Page 530 shows OTDR traces with gainers.	Caused by a dirty or unseated connector, highly-reflective connector, a connector with an incorrect polish, a sharp bend, or a crack in a fiber. To see where to look for the fault, find the **Ghost Source** in the event table. The ghost source is always before the ghost. The event table does not show ghosts that occur after the end event. If the ghost source is a hidden event, the tester possibly will not identify a ghost event as a ghost. The tester does not give a **PASS/FAIL** status to this event.

(continued)

Table 17. Event Types in the Event Table (continued)

Ghost Source A reflective event that causes an ghost.	Caused by a dirty or unseated connector, a connector with solvent on its endface, a highly-reflective connector, a connector with the wrong polish, a sharp bend, or a crack in a fiber. On traces with multiple ghosts, the event table possibly shows only the strongest ghost source. You can usually see that other reflections are ghosts because they occur at multiples of distances to connectors and they show almost no loss. Verify that the connector is seated properly. Inspect connectors that cause ghosts. If a connector is apparently not the ghost source, use a visual fault locator to look for bends or cracks in the fiber near the ghost source.
Gainer An apparent gain in the strength of the returned signal. A gainer shows as a negative value of loss. Page 529 shows OTDR traces gainers.	Caused by a splice or connection between two fibers that have different backscatter coefficients, numerical apertures, core diameters, or mode field diameters. The tester compares the loss of non-reflective gainers to the limits for splice loss to give the event a **PASS/FAIL** status. If a gainer occurs at a connection, the gainer shows as a **Reflection** event with negative loss. The tester compares reflective gainers to the limits for reflective events to give the event a **PASS/FAIL** status. Strong reflections at or before an event can cause tailing after the event, which can cause a measurement of negative loss. To find the cause of a gainer, see if the fiber type is different before and after the splice or connection. Replace fiber if necessary. Fibers that are the same can possibly have different tolerances, which can cause gainers at a splice. When this occurs, the splice is usually good and does not require rework. (continued)

Table 17. Event Types in the Event Table (continued)

Gainer (continued) An apparent gain in the strength of the returned signal. A gainer shows as a negative value of loss. Page 529 shows OTDR traces with gainers.	If you do the OTDR test from the other end, the gainer event will show a loss. If you save the result with the same ID as the result from the other direction, the tester automatically calculates bi-directional averages of loss measurements and includes the averaged values in the test record. The averaged loss is more accurate than the loss measured in one direction. See "Averaged Bi-Directional Results" on page 504. Gainers at launch events can occur when the launch cord does not have the same properties as the fiber under test. In this situation, you can get more reliable results if you do a bi-directional test. Use a tail cord that has the same properties as the launch cord and use **Launch + Tail** compensation.
No Fiber The tester does not see a fiber connected to the OTDR port.	No fiber is connected to the OTDR port, the fiber is broken or cracked near the port, the port has very high loss, or the fiber is too short. Connect a fiber to the port or to the launch cord. If a fiber is connected: • Make sure the connection is tight and there are no breaks or cracks in the fiber near the port. • Clean and inspect the port connector. • Do a **Manual OTDR** test with a narrow pulse width.

(continued)

Table 17. Event Types in the Event Table (continued)

Out of Range The tester did not find an end event.	This can occur for **Manual OTDR** tests when the range you selected is too short. Select a higher range on the **TEST SETUP** screen. For **Auto OTDR** tests, **Out of Range** can occur when the cabling is much longer than the range of the module. Rarely, very bad connections along the cabling can cause the OTDR to select a range that is too short. Compare the expected cabling length to the maximum range of the module. If the length is within range, try the **Manual OTDR** test with the maximum range setting. For **DataCenter OTDR** tests, **Out of Range** can occur if the link is longer than the range of the test.
Weak Signal The signal is attenuated below the background noise level before the tester found the end of the fiber.	No fiber is connected to the OTDR port, the fiber is too short, there is a bad connector in the link, the fiber is broken or bent, or the fiber is very long. **Weak Signal** can also occur if the fiber has very high loss or you did a **Manual OTDR** and the pulse width was too narrow.
No Signal The tester did not receive any reflected light from the fiber or from the OTDR port connector.	There is a problem with the module. If this event continues to occur, contact Fluke Networks for assistance.

OVERALL FIBER RESULTS Screens

The **OVERALL FIBER RESULT** screen shows more information about the link. To see this screen, tap **OVERALL** on the **TABLE** screen.

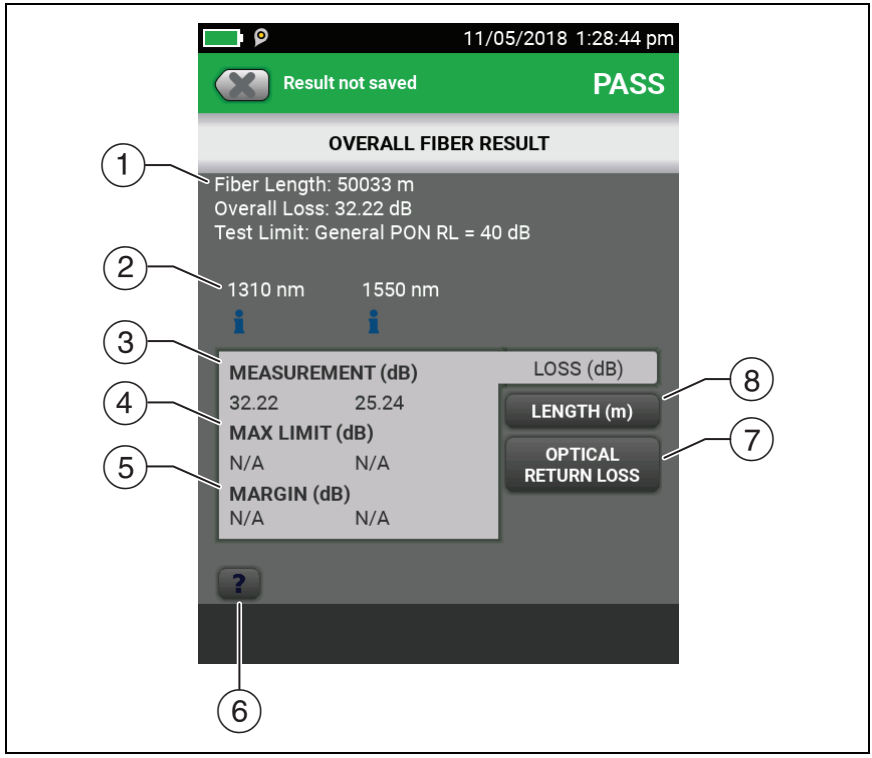

GPU224.EPS

Figure 181. HDR OTDR OVERALL FIBER RESULT Screen

① **Fiber Length**: The length of the fiber.

Overall Loss: The loss of the connectors and the fiber in the link.

Test Limit: The test limit the OTDR used for the test.

② The wavelengths the tester used for the test.

③ Measurements of overall loss for each wavelength the tester used. The measurement is red if it exceeds the limit.

④ **MAX LIMIT**: The maximum loss allowed by the selected test limit for each wavelength the tester used.

⑤ **MARGIN**: The difference between the limit and the measured loss for each wavelength the tester used. Margin is negative if the loss exceeds the limit.

⑥ Tap  to see help for this screen.

If the results include warnings, tap  to see the warnings.

If a warning caused the test to fail, tap  to see the warning. Some conditions make the OTDR test fail even when all measurements are within the limits.

⑦ **OPTICAL RETURN LOSS**: This tab shows the ORL for the link. Optical return loss is the ratio of the light from the source to the light that the link reflects back to the source. The reflected light is the total light reflected by the fiber and components in the link. This includes the launch/tail cord events, fiber segments, connectors, splices, and faults. If launch compensation is on, this includes only the fiber between the launch and tail connections, including the launch and tail events. If launch compensation is off, it includes the fiber from the OTDR port connection, including the OTDR port connection, to the end of the fiber. The last connector is not included, unless it has a reflectance that is below the reflectance of the fiber, as can occur with APC connectors.

ORL values are in units of positive decibels. A larger ORL value shows that less light is reflected back to the source. For example, a link with an ORL of 45 dB reflects less light back to the source than a link with an ORL of 30 dB.

⑧ **LENGTH**: This tab shows the length of the fiber and the maximum length allowed by the test limit. If the distance to the end of the fiber does not agree at all wavelengths, this tab shows the longest length.

EVENT DETAILS Screen

The **EVENT DETAILS** screen shows more information about events. To see this screen, tap the information window for an event in the EventMap or in the event table.

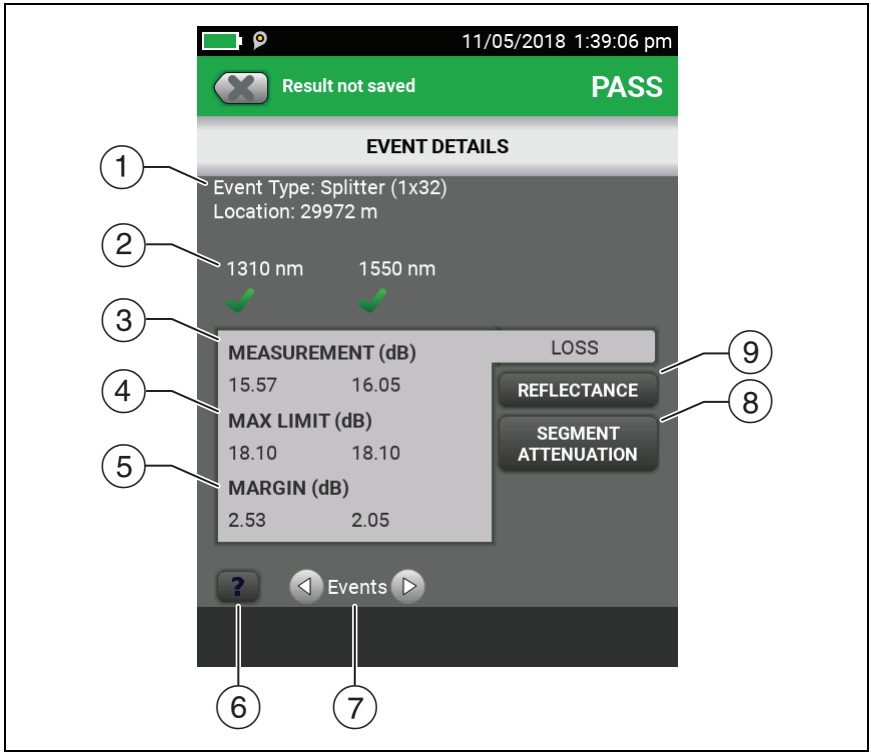

GPU225.EPS

Figure 182. HDR OTDR EVENT DETAILS Screen

① The type of event (see Table 17) and the distance from the tester to the event.

② The wavelengths the tester used for the test. Possibly, some events show only at one wavelength.

③ The loss of the event for the wavelength the tester used.

④ **LIMIT**: The maximum loss allowed by the selected test limit for each wavelength the tester used. **N/A** shows if there is no test limit for the measurement.

⑤ **MARGIN**: The difference between the limit and the measured loss for each wavelength the tester used. Margin is negative if the loss exceeds the limit. **N/A** shows if there is no test limit for the measurement.

⑥ Tap ? to see help for this screen.

⑦ To see details for the event before or after this one, tap ◁ or ▷ next to **Events**.

⑧ **SEGMENT ATTENUATION**: This tab shows the attenuation coefficient of the fiber segment before the event. This is the attenuation per unit of length for the segment. This value shows as **N/A** if the tester could not measure it accurately. This can occur for short segments or if the connector before the segment has too much tailing.

⑨ **REFLECTANCE**: Reflectance is the return loss for one event. It is the ratio of the light reflected at one point on the fiber to the light that gets to that point from the source. Reflectance values are in units of negative decibels. A smaller (more negative) reflectance value shows that less light is reflected back to the source. For example, a reflectance of -45 dB shows for a good multimode connection. A reflectance of-20 dB shows for a bad multimode connection that reflects more light back to the OTDR.

Reflectances that exceed the measurement range of the tester show a ">" (greater than) symbol. If any reflection shows ">", ORL shows "<" (less than).

Reflectances from hidden events can possibly show "<" because the tester cannot measure the backscatter before the event.

Note

*Reflectance measurements are affected by the backscatter value you enter on the **TEST SETUP** screen.*

About Measurements that Show "<" and ">"

In some situations, measurements show with a "<" or ">" (less than or greater than) symbol. This occurs if the fiber is too long, the signal is weak, events are very close together, or a measurement is beyond the range of the tester.

HDR OTDR Trace

To see the OTDR trace, tap **TRACE** on the OTDR results screen. Figure 183 shows an example of an OTDR trace.

① The decibel scale shows the level of backscatter. The tester sets the backscatter level at the start of the trace to approximately 0 dB.

② The measurement cursor. To measure loss and distance, tap the yellow circle so that **MARK** shows, drag the cursor to the start of the measurement, tap **MARK**, then drag the cursor to the end of the measurement. See "How to Use the Measurement Cursor on the OTDR Trace" on page 474.

③ When the cursor is on an event, this area shows the event type. See Table 17 on page 457. The text is green if the event passed, red if the event failed, or black is there is no limit for measurements. The pass or fail status is for the wavelength shown. The event type does not show after you tap **MARK** to use the measurement cursor.

④ Tap ? to see help for this screen.

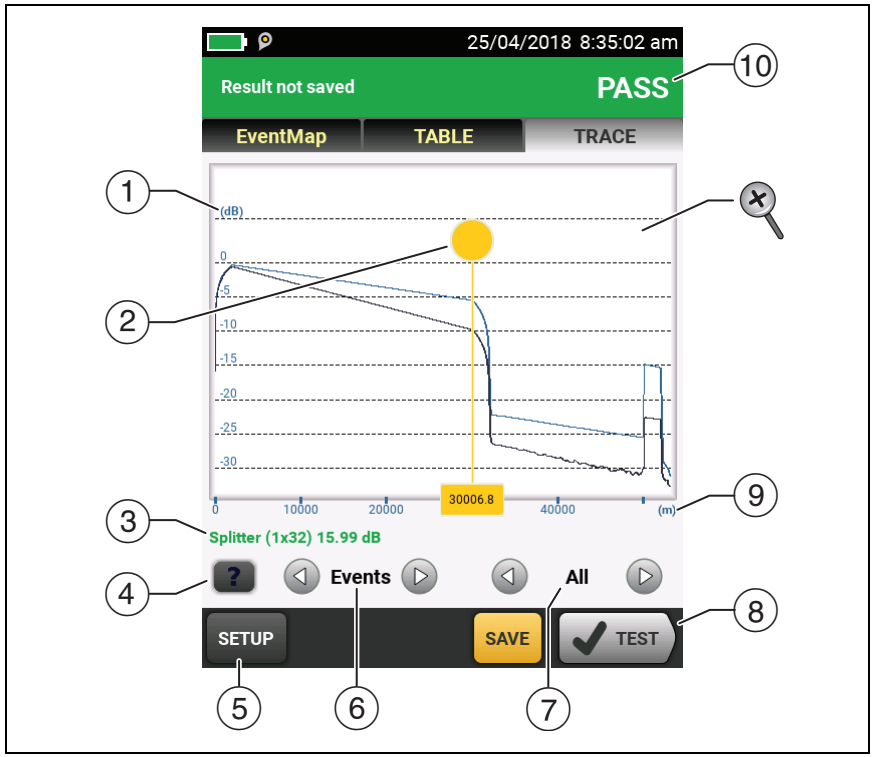

GPU223.EPS

Figure 183. HDR OTDR Trace

⑤ Tap **SETUP** to change the **RANGE**, **PULSE WIDTH**, **AVERAGING TIME**, and wavelengths for the test. See "How to Quickly Change OTDR Settings After a Test" on page 472. You can also tap **CURRENT** to see the settings used on the test.

⑥ Tap ◁ or ▷ to move the cursor to another event.

⑦ The wavelength the tester used for the test. If the tester used more than one wavelength, tap ◁ or ▷ to see the other wavelength. Possibly, some events show only at one wavelength.

You can also tap ◁ or ▷ to see the trace overlay screen. When **All** shows, the screen shows the traces for all wavelengths.

⑧ When more than one button shows at the bottom of the screen, the tester highlights one in yellow to recommend which one to tap. See "Buttons to Do Tests and Save Results" on page 63.

⑨ The distance scale shows the distance along the fiber.

⑩ **PASS**: All measurements were within the limits.

FAIL: One or more measurements exceeded its limit.

To zoom in and out, use the pinch, reverse-pinch, and double-tap gestures on the touchscreen. You can also use the zoom controls to change the magnification on the distance and decibels scales independently. See Figure 5 on page 25.

How to Quickly Change OTDR Settings After a Test

After an OTDR test, you can quickly change some OTDR settings when you want to try different settings on the same fiber. After you do a test, tap **SETUP** on the **TRACE** screen, then select settings on the **MANUAL PON OTDR** (Figure 184) or **MANUAL OTDR** screen.

You can save your settings to the **Active** test setup or to a **New** test setup, or you can tap **TEST** to do a test without saving the settings.

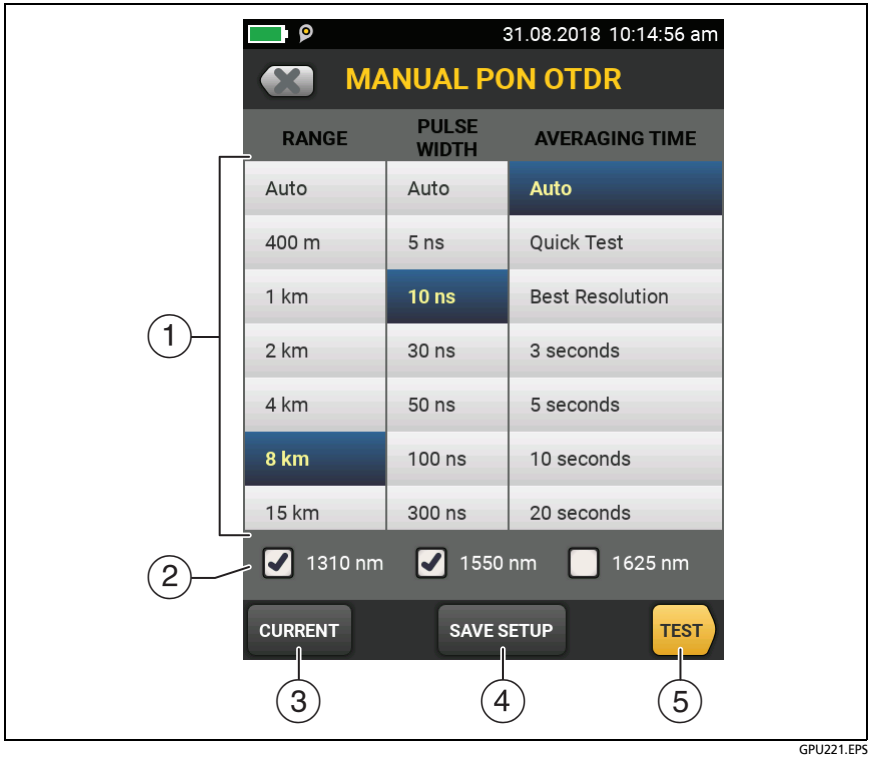

GPU221.EPS

Figure 184. Manual PON OTDR Screen for Quick Changes After a Test

① Tap the settings you want. You can scroll some columns to see more settings. Table 15 on page 430 gives descriptions of the settings.

② Select the wavelengths to use for the test.

③ Tap **CURRENT** to see the settings the tester used for the last test.

④ The **SAVE SETUP** button lets you save your settings:

Note

*The **SAVE SETUP** button does not show if the wavelengths on the screen (②) are not available in the active test setup. For example, the button does not show if the OptiFiber Pro HDR OTDR is module installed, but the active test setup is for an OptiFiber Pro module.*

Active: The tester saves the settings in the active test setup. If the test was not a **Manual** test, the tester changes the active **Test Type** to **Manual**.

New: The tester saves the settings in a new test setup that is added to the project. The new setup is a **Manual PON OTDR test** or a **Manual OTDR** test.

If you save your settings in a new test setup:

The tester uses your settings until you save the results or exit the results screen then start a test from the home screen. Then the tester uses the test setup it had before you changed the settings.

If you do not save your settings:

The tester uses your settings until you save the results or exit the results screen then start a test from the home screen. Then the tester uses the test setup it had before you changed the settings.

⑤ Tap **TEST** or press TEST to do a test with the settings you selected.

The **PROGRESS** screen shows **Manual PON OTDR** when the tester uses your settings.

How to Use the Measurement Cursor on the OTDR Trace

You can use the cursor on the OTDR trace to measure distance and loss along the cabling. As you move the cursor, the tester calculates averages around the mark and cursor locations. This decreases the effects of noise on measurements.

To use the measurement cursor

See Figure 185.

1 Tap the yellow circle at the top of the cursor (②) so that **MARK** shows.

2 While **MARK** shows, use one of these methods to move the cursor to the point where you want to start the measurement:

- Drag the cursor with the yellow circle (②).
- Tap or press and hold ◁ or ▷ (③).
- To move the cursor to an event, tap ◁ or ▷ next to **Events** (⑥).

3 Tap **MARK**, then while **UNMARK** shows, move the cursor to the point where you want to end the measurement.

Note
*If **UNMARK** and the cursor controls do not show, tap the yellow circle.*

These indicators show on the screen:

- **∆dB =** : The difference in the power levels (in decibels) between the start and end of the green measurement bar.
- **∆m** or **∆ft =** : The distance between the start and end of the green measurement bar.
- **∆dB/km** or **∆dB/kft =** : Power loss (in decibels) that would occur over 1 km (1000 m) or 1 kft (1000 ft) of fiber. The tester uses the loss between the start and end of the green measurement bar to calculate this value.

4 To make a new measurement, tap the yellow circle, tap **UNMARK** (⑨), then do steps 1, 2, and 3 again.

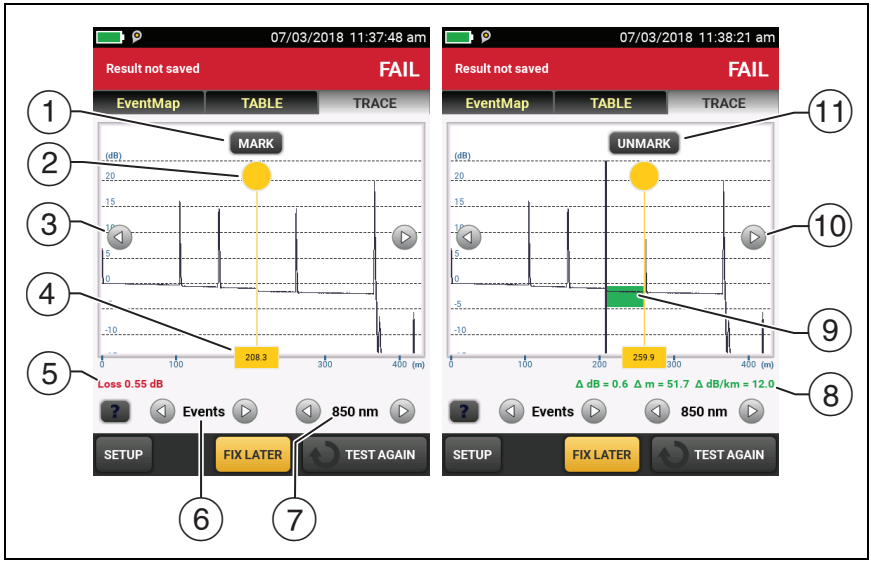

GPU18.EPS

Figure 185. How to Use the Measurement Cursor on the ODTR Trace

① To specify the start of a measurement, tap the yellow circle (②), then tap **MARK**.

② To see the **MARK** and **UNMARK** buttons, tap the yellow circle.

③ To move the cursor in small increments, tap or press and hold ◁ or ▷. If these buttons do not show, tap the yellow circle on the cursor.

④ The measurement in the square is the distance from the start of the fiber to the yellow cursor.

⑤ When the cursor is on an event before you set the mark, this area shows the event type. See Table 17 on page 457. The text is green if the event passed, red if the event failed, or black is there is no limit for measurements. After you set the mark, the event type does not show.

⑥ To move the cursor to an event, tap ◁ or ▷.

⑦ If the tester used two wavelengths, tap ◁ or ▷ to see the other wavelength.

⑧ To start another measurement, tap **UNMARK**. If **UNMARK** does not show, tap the yellow circle (②).

⑨ The green measurement bar goes from the start point to the end point of your measurement.

⑩ Δ **dB**: The difference in the power levels (in decibels) between the start and end of the green bar.

Δ **m** or Δ **ft**: The distance between the start and end of the green bar.

Δ **dB/km** or Δ **dB/kft**: The power loss (in decibels) that would occur over 1 km (1000 m) or 1 kft (1000 ft) of fiber based on the loss between the start and end of the green bar.

How To Do Bi-Directional Tests on Single Fibers

Note

For bi-directional tests on links with two fibers, Fluke Networks recommends that you use the SmartLoop feature. See "Bi-Directional SmartLoop Tests" on page 498.

1. On the home screen, tap the **Next ID** panel.
2. On the **CHANGE ID** screen, turn off the **Auto Save** function and set the **End 1/End 2** control to **End 1**.
3. Enter names for the ends of the fiber (optional):
   a. On the **CHANGE ID** screen, tap the panel that shows **End 1:**.
   b. On the **EDIT END NAME** screen, tap the **End 1** and **End 2** panels to use the keyboard to enter names for each end. Tap **DONE** to save the names.
4. On the **CHANGE ID** screen, tap **DONE**.

5 Clean and inspect all connectors, then connect the tester to **End 1** of the link.

6 Tap **TEST** or press TEST, then save the result.

7 Clean and inspect the connector for **End 2** of the link, then connect the tester to **End 2**.

8 Press HOME, then tap the **Next ID** panel.

9 Tap the **End 1/End 2** control at the top of the screen to make it show **End 2**, then tap **DONE**.

10 Tap **TEST** or press TEST.

11 Save the result with the same ID you used for **End 1**.

The tester automatically calculates bi-directional averages of loss measurements and includes the averaged values in the test record. For descriptions of these results, see "Averaged Bi-Directional Results" on page 504.

Note

The tester will not calculate bi-directional averages for test results that include splitters.

How To Do Bi-directional Tests for All IDs in a Set

In this procedure, you test all the links from **End 1**, then test them all again from **End 2**.

1 On the home screen, tap the **Next ID** panel.

2 If necessary, tap **CHANGE CABLE IDs** to select or make an ID set.

3 On the **CHANGE ID** screen, turn on the **Auto Save** function and set the **End 1/End 2** control to **End 1**.

4 Enter names for the ends of the fiber (optional):

a. On the **CHANGE ID** screen, tap the panel that shows **End 1:**.

b. On the **EDIT END NAME** screen, tap the **End 1** and **End 2** panels to use the keyboard to enter names for each end. Tap **DONE** to save the names.

5 Tap **DONE** on the **CHANGE ID** screen.

6 Clean and inspect the connector for **End 1** of the link that has the first ID in the set.

7 Connect the tester to **End 1** of the link, then tap **TEST** or press ✔TEST.

8 Clean and inspect the connector for **End 1** of the link that has the next ID in the set.

9 Connect the tester to **End 1** of the next link, then tap **TEST** or press ✔TEST.

10 Repeat steps 8 and 9 for all IDs in the set.

11 Press HOME, then tap the **Next ID** panel.

12 On the **CHANGE ID** screen, tap the **End 1/End 2** control at the top of the screen to make it show **End 2**. In the list under **IDs Untested**, the tester highlights the first ID that does not include results for **End 2**. This should be the first ID in the set.

13 Tap **DONE** on the **CHANGE ID** screen.

14 Clean and inspect the connector for **End 2** of the link that has the first ID in the set.

15 Connect the tester to **End 2** of the link, then tap **TEST** or press ✔TEST.

16 Clean and inspect the connector for **End 2** of the link that has the next ID in the set.

17 Connect the tester to **End 2** of the next link, then tap **TEST** or press ✔TEST.

18 Repeat steps 16 and 17 for all IDs in the set.

Real Time Trace

The real time trace lets you see changes in the HDR OTDR trace as they occur. In this mode, the tester updates the OTDR trace several times each second. This mode helps you do tasks such as these:

- Find intermittent problems, such as those that occur only when you bend a fiber or apply force to a connector.
- Quickly see differences in segment lengths and the locations of connections in different links. Use the real time trace to look at one link, then connect to another link to quickly see a trace and compare it to the previous trace.
- Align fibers when you make a splice.

⚠Caution

Before you use the OTDR to help you make a splice, read the instructions for the splice machine. The light pulses from the OTDR can cause problems for some splice machines.

Note

The real time trace uses a lot of battery power. Use the ac adapter when you use this test for an extended period of time.

The real time trace test has two modes: auto length and fixed length.

- **AUTO LENGTH**: The tester makes necessary adjustments in its range and pulse width periodically or whenever the trace changes. These adjustments make the trace fill the screen for the best overall view of the fiber. The locations shown for connections and other features change if the range changes. The real time trace starts in auto length mode.

- **FIXED LENGTH**: The tester does not change any parameters for measurements, even if the trace changes. (The tester possibly adjusts the resolution and range at the beginning of the test for a faster test.) This mode helps you stay zoomed-in on an event when the fiber changes.

  If a large change in the fiber length occurs, change to **AUTO LENGTH** mode, then change to **FIXED LENGTH** mode again.

To use the real time trace

1. Clean and inspect the connectors on the launch and tail cords and the fiber to be tested.
2. Connect the tester to the link as shown in Figure 176 or 177.
3. On the home screen, tap the **TOOLS** icon then tap **Real Time Trace**.
4. In the **SELECT A WAVELENGTH** popup, select a wavelength for the test. If you select **Auto**, the tester selects the wavelength that gives the best dynamic range and the smallest dead zones for the link.
5. On the **Real Time Trace** screen (Figure 186):
   - To use the fixed-length mode, tap **FIXED LENGTH** (①).
   - To zoom in and out on the trace, use the pinch, reverse-pinch, and double-tap gestures on the touchscreen. See Figure 5 on page 25.
   - To change the **RANGE** and **PULSE WIDTH**, tap **SETUP** (②). See Figure 187.
   - To stop and start the test, tap **STOP** (③) and **RESUME**.
   - To exit the test, tap **STOP** (③) then tap **EXIT**.
   - To save the current results, tap **STOP** (③) then tap **SAVE**.

Notes

The results for the real time trace show only the OTDR trace at one wavelength.

The real time trace result does not include a **PASS**/**FAIL** *status.*

The real time trace does not show the markers for the launch and tail cords.

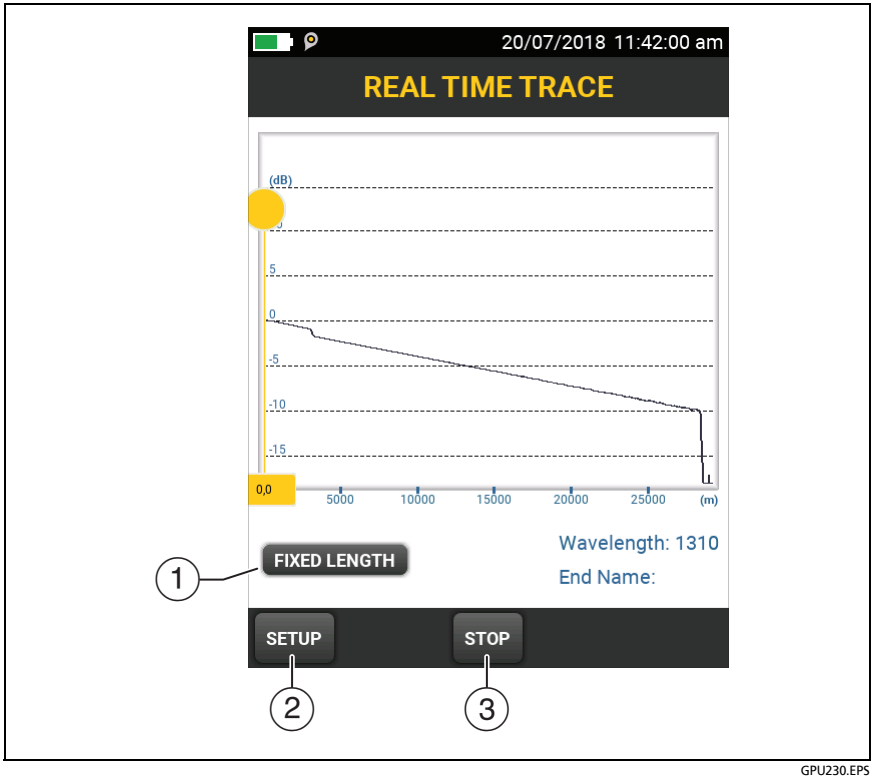

GPU230.EPS

Figure 186. Real Time Trace Screen (OptiFiber Pro HDR module)

How to Quickly Try Different HDR OTDR Settings in Real Time Trace Mode

After a HDR OTDR test, you can quickly change some OTDR settings when you want to try different settings on the same fiber. After you do a test, tap **SETUP** on the **TRACE** screen, then select settings on the **MANUAL PON OTDR** screen (Figure 187).

You can save your settings to the **Active** test setup or to a **New** test setup, or you can tap **TEST** to do a test without saving the settings.

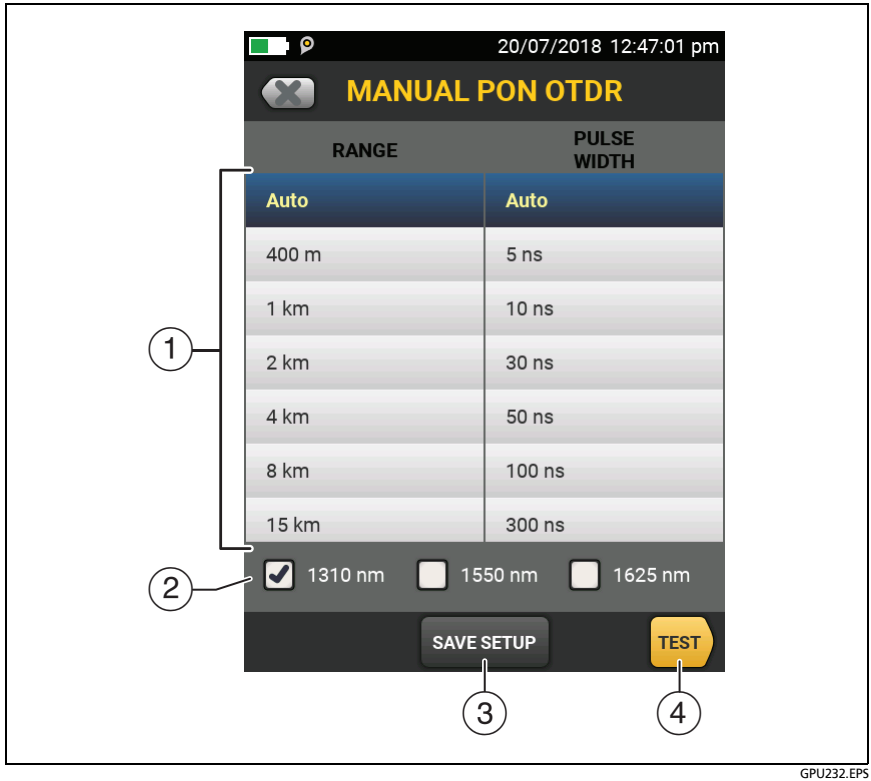

GPU232.EPS

Figure 187. Manual PON OTDR Screen for Quick Changes to Real Time Trace Settings

① Tap the settings you want. You can scroll some columns to see more settings. Table 15 on page 430 gives descriptions of the settings.

② Select the wavelengths to use for the test.

③ The **SAVE SETUP** button lets you save your settings:

Active: The tester saves the settings in the active test setup. If the test was not a **Manual** test, the tester changes the active **Test Type** to **Manual**.

Note

***Active** does not show if the wavelengths on the screen (②) are not available in the active test setup. For example, **Active** does not show when you have the OptiFiber Pro HDR OTDR module installed, but the active test setup is for an OptiFiber Pro module.*

New: The tester saves the settings in a new test setup that is added to the project. The new setup is a **Manual PON OTDR test** or a **Manual OTDR** test.

If you save your settings in a new test setup:

The tester uses your settings until you save the results or exit the results screen then start a test from the home screen. Then the tester uses the test setup it had before you changed the settings.

If you do not save your settings:

The tester uses your settings until you save the results or exit the results screen then start a test from the home screen. Then the tester uses the test setup it had before you changed the settings.

④ Tap **TEST** or press ✔TEST to do a test with the settings you selected.

The **PROGRESS** screen shows **Manual PON OTDR** when the tester uses your settings.

The FaultMap Test

The FaultMap test helps you record the connections in a fiber link and identify bad connections. It can show short patch cords and find connections that have high reflectance. The FaultMap test gives you these results:

- Shows a map of the connectors in the link that possibly do not show on the OTDR EventMap. The map includes connectors that are hidden in the dead zones made by previous events. The FaultMap test shows patch cords as short as 0.5 m for lengths < 2 km.
- Shows connections that are poor because they have high reflectance (> -35 dB).
- Reflective events that are apparently not connectors do not show on the FaultMap diagram. Loss events, including bends and splitters, are also not shown.

The FaultMap test finds events that have a reflectance larger than approximately -60 dB on single-mode fiber. (More negative values mean less reflectance and a better connection. For example, a connector with a reflectance of -40 dB is better than one with -35 dB.)

Notes

Since the FaultMap test finds only reflections, do not use it to look for fusion splices or angled physical contact (APC) connectors.

*FaultMap results do not include a **PASS**/**FAIL** status. The results are only for your documentation of the link.*

FaultMap tests on single-mode fiber usually take more time than OTDR tests. The test uses very narrow pulses on single-mode fiber to make the smallest event dead zones possible, and does more analysis on the reflections in the link.

How to Do the FaultMap Test

Notes

The FaultMap test does not use the launch compensation settings.

The FaultMap test uses the wavelength that gives the best results.

Figure 188 shows the equipment for the FaultMap test.

1. Clean and inspect the connectors on the launch and tail cords or patch cords and the link to be tested.
2. Connect the launch cord to the OTDR port and the link to be tested, as shown in Figure 189. Connect a tail cord to the far end of the link if necessary.

   Or, you can use a patch cord that is 1 m long at minimum to connect the tester to the link. To see results for the far-end connector, connect a tail cord or patch cord (>1 m) to the far end of the link.
3. On the home screen, tap the test setup panel.
4. On the **CHANGE TEST** screen, tap the **FaultMap** test, then tap **USE SELECTED**. If a FaultMap test is not available, tap **NEW TEST** to add one to the project.

   Tap **TEST** or press ✔TEST.

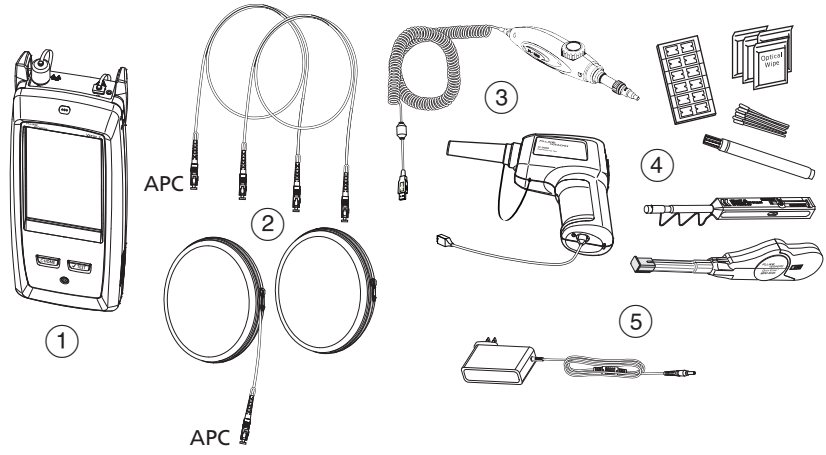

1. Main tester with HDR OTDR module installed
2. Launch and tail cords or patch cords
3. FI-1000 or FI-3000 video probe with USB connector
4. Fiber cleaning supplies
5. AC adapter (optional)

⚠Caution

Do not connect PC or UPC connectors to the HDR OTDR port. Doing so can damage the port's APC endface, and the large reflection at the OTDR port can cause unreliable test results.

Figure 188. Equipment for FaultMap Tests

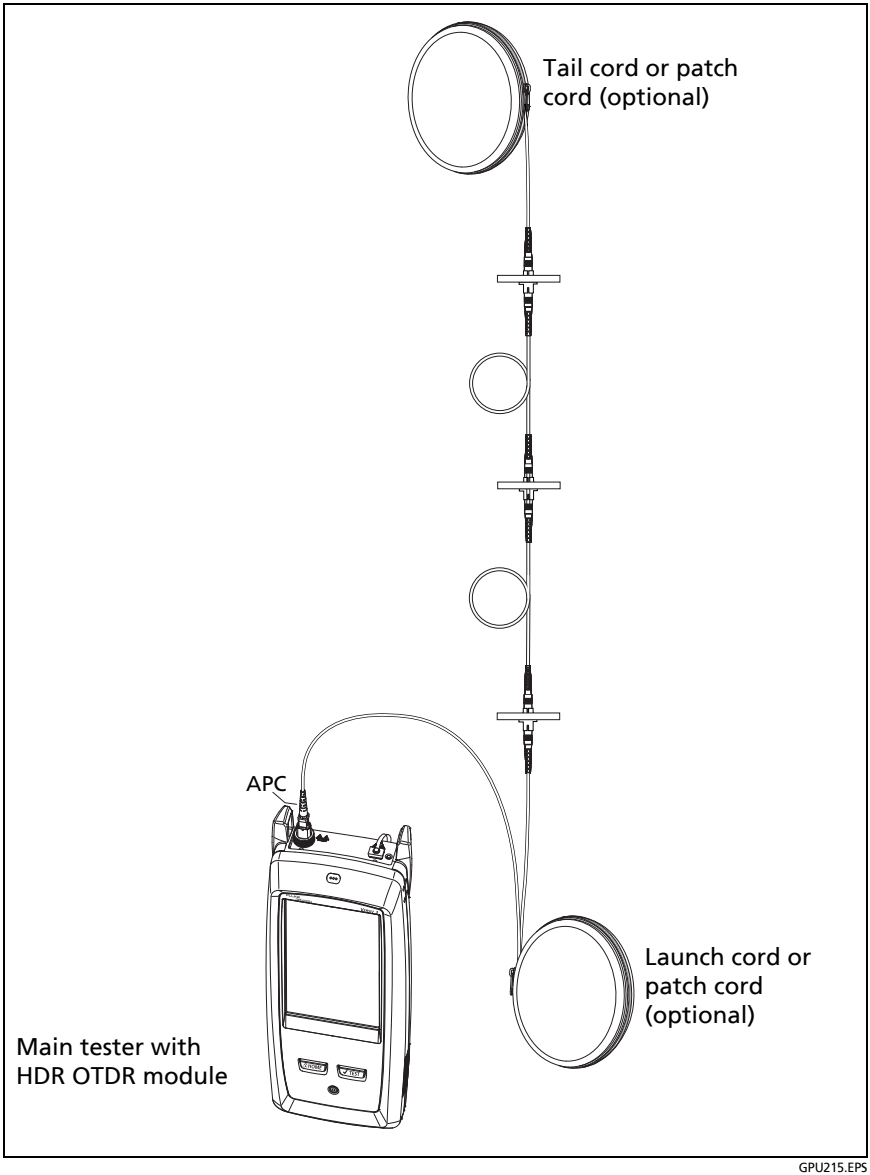

Figure 189. FaultMap Test Connections

FaultMap Screen



Figure 190. FaultMap Screen

Note

The FaultMap test does not use the launch compensation settings. The results show the launch and tail cords and their connectors in the same colors as other cords and connectors.

① The ID for the results. If **Auto Save** is off, **Result not saved** shows.

② : An event that has a reflectance smaller than -35 dB.

③ The length of the fiber segment between two events.

④ : An event that has a reflectance larger than -35 dB. It is possibly a connector that is dirty, poorly polished, scratched, cracked, misaligned, unseated, worn, or the wrong type.

: The arrow icon shows when there are more events that do not show on the screen. To see the events, tap the icon or scroll the screen.

⑤ Names for the ends of the link. For example, the names can describe the locations of the ends: “TELECOM” for the ends in the telecommunications closet and “OFFICE” for the ends in offices. You can enter names on the **CHANGE ID** screen. See Figure 209 on page 556.

⑥ When more than one button shows at the bottom of the screen, the tester highlights one in yellow to recommend which one to tap. See “Buttons to Do Tests and Save Results” on page 63.

⑦ If the window is blue, the reflectance of the event is smaller than -35 dB. If the window is orange, the reflectance is larger than -35 dB.

To see the window for another event, tap another icon on the fiber.

⑧ **Fiber Length**: The length of the fiber. This includes the lengths of the launch and tail cords, if you used them.

The SmartLoop Test

The SmartLoop test lets you connect the far ends of the two fibers in a link and do one OTDR test to get separate results for each fiber. This reduces your test time by approximately 50% and lets you keep the tester at one end of the links.

You use a launch cord to connect the fibers together at the far end of the link. When you do the SmartLoop test, the tester uses the launch compensation settings to remove the effects of the loopback cord and its connectors.

The tester saves the results in two records, one for each fiber in the link.

The Auto and Manual settings for the SmartLoop test operate the same as for the OTDR test. See Table 15 on page 431.

Figure 191 shows the equipment for the SmartLoop test.

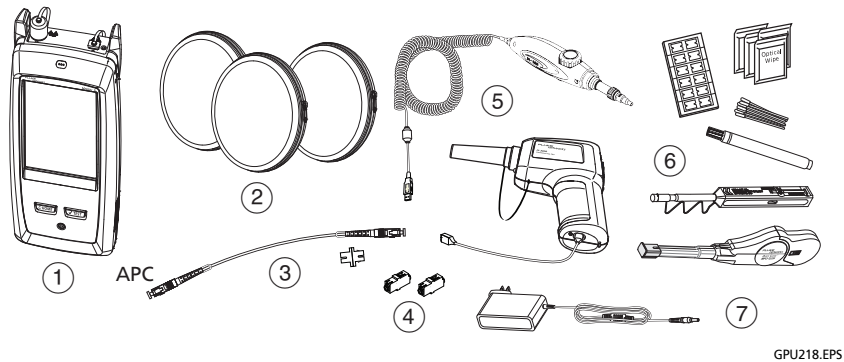

1. Main tester with HDR OTDR module installed
2. Three launch cords for launch, tail, and loopback connections. Match the fiber to be tested.
3. Short patch cord (30 cm (12 in) maximum) and adapter for bi-directional tests (optional). One end must have an APC connector for the HDR OTDR port.
4. Two adapters
5. FI-1000 or FI-3000 video probe with USB connector
6. Fiber cleaning supplies
7. AC adapter (optional)

⚠Caution

Do not connect PC or UPC connectors to the HDR OTDR port. Doing so can damage the port's APC endface, and the large reflection at the OTDR port can cause unreliable test results.

Figure 191. Equipment for SmartLoop Tests

How To Do an Auto SmartLoop Test

Set Up SmartLoop Launch Compensation

1 On the home screen, tap the test setup panel.

2 On the **CHANGE TEST** screen, tap the button next to the Auto SmartLoop test, then tap **USE SELECTED**.

If an Auto SmartLoop test is not available, tap **NEW TEST** to add one to the project. Select settings as necessary on the **TEST SETUP** screen. See "Settings for HDR OTDR Tests" on page 430.

3 Select three launch cords that have the same type of fiber as the fiber you will test. The connectors must be the correct type for each connection you will make. If necessary, you can connect two launch cords together to make a loopback cord that has the same connectors on both ends.

4 On the home screen, tap **SET COMP**.

5 On the **SET LAUNCH METHOD** screen tap **SmartLoop**.

6 Clean and inspect the OTDR port and connectors on the three launch cords.

7 Make the connections shown in Figure 192.

8 Tap **SET**.

9 When the **SET LAUNCH COMP** screen shows, make sure the tester shows the correct distances for the end of the launch cord and the start of the tail cord.

Note

*If the fibers have APC connectors, the tester possibly will not find the correct launch and tail events. If this occurs, do the compensation again and select **Manual Entry** to enter the lengths of the cords manually.*

10 Tap **SAVE**.

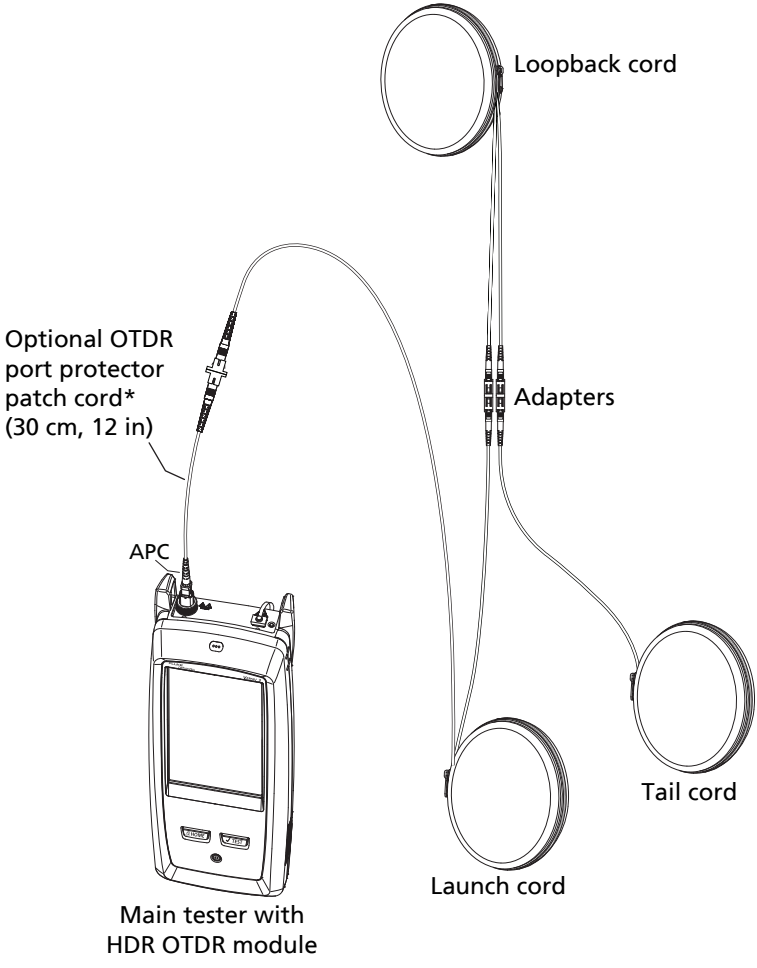

*Optional for tests in one direction. Recommended for bi-directional tests to protect the OTDR port from wear. These cords are available from Fluke Networks.

GPU216.EPS

Figure 192. SmartLoop Launch Compensation Connections

Do the SmartLoop Test

1 Make the connections shown in Figure 193.

2 On the home screen, make sure the IDs for the fibers are correct. The tester uses the **Fiber A** ID for the fiber connected to the launch cord.

3 Tap **TEST** or press ✔TEST.

Note

If the tester shows a message about the connection quality of the OTDR port, but the OTDR connection on the tester is good, inspect the ends of the loopback cord. See "Port Connection Quality for SmartLoop Tests" on page 442.

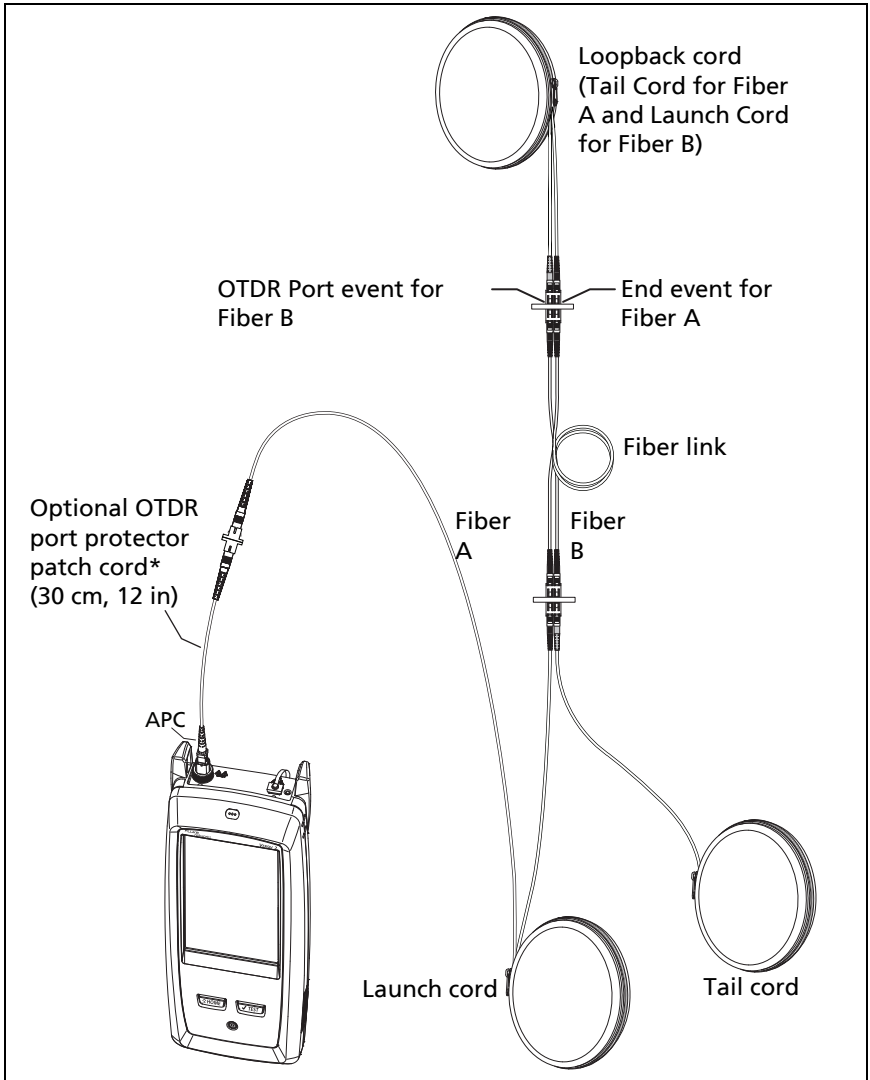

Figure 193. SmartLoop Test Connections

SmartLoop Results

The tester shows the SmartLoop results on two sets of **EventMap**, **TABLE**, and **TRACE** screens, one for each fiber in the link. See Figure 194.

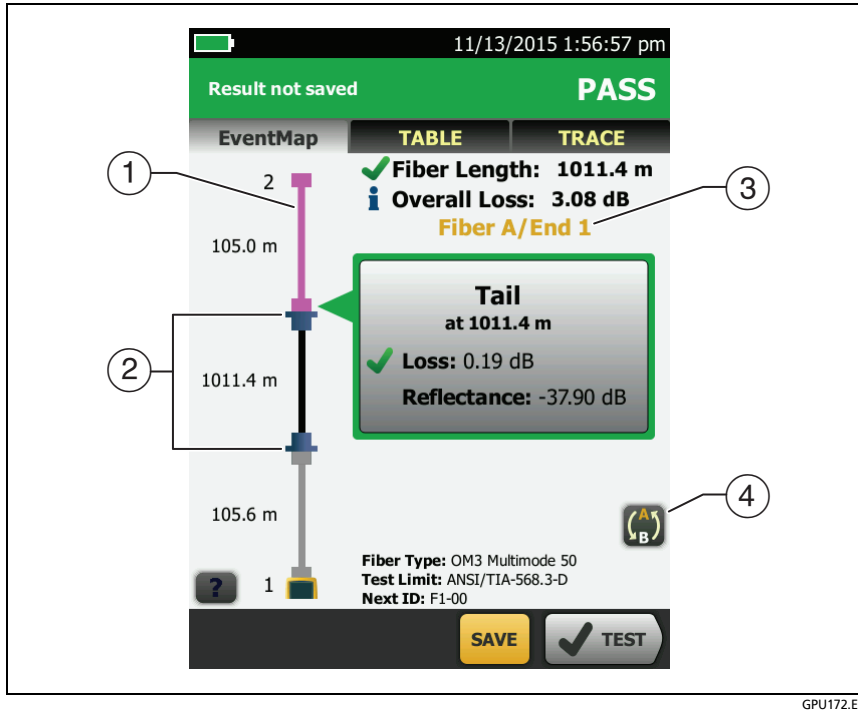

GPU172.EPS

Figure 194. EventMap from a SmartLoop Test

① The purple fiber is the loopback cord.

Note

In saved SmartLoop results, the loopback cord is gray.

② The fiber between the launch cord and the loopback cord is the fiber on one side of the link.

③ **Fiber A** is the side of the link connected to the OTDR at **End 1**.

④ To switch between results for fibers A and B, tap  on the EventMap screen.

Note

When you save SmartLoop results, the tester saves the results in two records, one for each fiber in the link.

Bi-Directional SmartLoop Tests

The bi-directional SmartLoop test gives you bi-directional OTDR results for both fibers in a link. The tester also automatically calculates averages of the two results and includes the averaged values in the test record.

Why Do Bi-Directional Tests?

OTDR tests from both ends of a fiber can give different results because some properties of fiber and fiber components can cause differences between the loss measurements for each direction.

For example, the loss of an event is the difference between the backscatter levels before and after the event. If a segment after a connector or splice has a higher backscatter value than the segment before, the tester shows different values of loss for the connector or splice from the two directions.

For splices, which have very little loss, the difference in the backscatter of the two fibers can cause an apparent gain in power across the splice in one direction. For these and other reasons, bi-directional averages of connector and splice loss in both directions are more accurate than measurements from one direction.

When To Do Bi-Directional Tests

You might need to do bi-directional OTDR tests to meet customer requirements. You should also do a bi-directional test if you get these results:

- The OTDR event table shows a gainer (see Table 17).
- The OTDR event table shows a hidden event (see Table 17).
- The loss of a connector or splice is unusually low.
- The loss of a connector or splice is unusually high, and you are sure that the connector or splice is good.
- There is a splice on the fiber, but it does not show in the OTDR test results.

Note

To do bi-directional tests on single fibers, see "How To Do Bi-Directional Tests on Single Fibers" on page 477.

How to Do a Bi-Directional SmartLoop Test

Set Up SmartLoop Launch Compensation

1. On the home screen, tap the test setup panel, make sure the correct SmartLoop test is selected on the **CHANGE TEST** screen, then tap **EDIT**.

   If an Auto SmartLoop test is not available, tap **NEW TEST** to add one to the project. Select settings as necessary on the **TEST SETUP** screen. See "Settings for HDR OTDR Tests" on page 430.

2. On the **TEST SETUP** screen, in the **Bi-Directional** panel, tap the control to make it show **On**, then tap **SAVE**.

3. On the **CHANGE TEST** screen tap **USE SELECTED**.

4. Select three launch cords that have the same type of fiber as the fiber you will test. The connectors must be the correct type for each connection you will make. If necessary, you can connect two launch cords together to make a loopback cord that has the same connectors on both ends.

5. On the home screen, tap **SET COMP**.

6. On the **SET LAUNCH METHOD** screen tap **SmartLoop**.

7. Clean and inspect the OTDR port and connectors on the three launch cords.

8. Make the connections shown in Figure 192 on page 494.

9. Tap **SET**.

10 When the **SET LAUNCH COMP** screen shows, make sure the tester shows the correct distances for the end of the launch cord and the start of the tail cord.

Note

*If the fibers have APC connectors, the tester possibly will not find the correct launch and tail events. If this occurs, do the compensation again and select **Manual Entry** to enter the lengths of the cords manually.*

11 Tap **SAVE**.

Do the SmartLoop Test

1 On the home screen, make sure the IDs for the fibers are correct. The tester uses the **Fiber A** ID for the fiber connected to the launch cord at the start of the test.

2 Make the connections for **End 1** as shown in Figure 195.

(continued)

Notes

To decrease the wear on the OTDR connector and help keep it clean, use an OTDR port protector (30 cm, 12 in) patch cord to connect the OTDR to the launch and tail cords for bi-directional SmartLoop tests. These cords are available from Fluke Networks.

To minimize the effect of the port protector patch cord on results, do not use a cord longer than 50 cm (20 in).

3 Tap **TEST** or press ✔TEST.

4 Halfway through the test, the tester tells you to connect the tail cord to the OTDR port. Make the connections for **End 2** as shown in Figure 195, then tap **DONE**.

The tester automatically calculates bi-directional averages of loss measurements. See "Averaged Bi-Directional Results" on page 504.

⚠Caution

Switch the launch and tail connections at the end of the short patch cord. If you switch the connectors at the patch panel, you will possibly get less accurate results for those connections during the second half of the test.

5 If **Auto Save** is on, the tester uses the next two IDs to save the results for the two fibers.

If **Auto Save** is off, and you tap **SAVE** or **FIX LATER**, the **SAVE RESULTS** screen shows the next two IDs available. You can change the IDs if necessary.

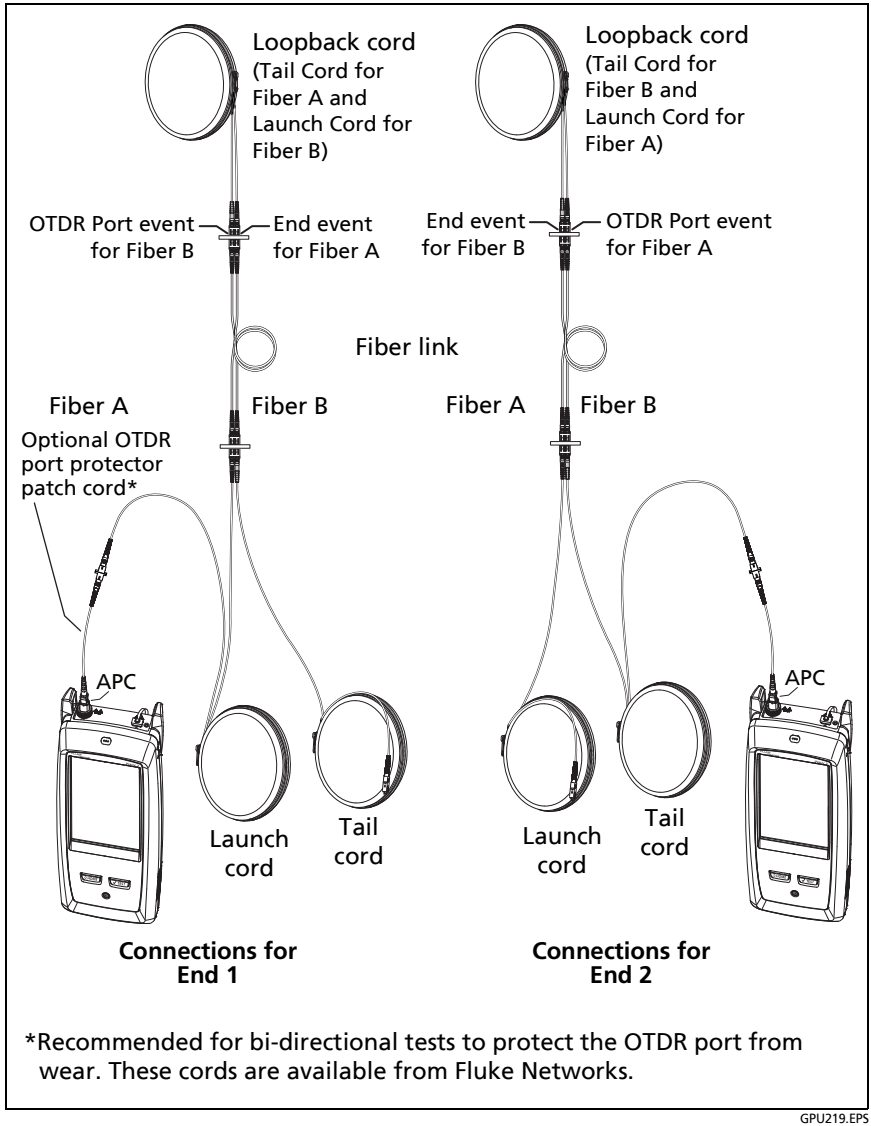

*Recommended for bi-directional tests to protect the OTDR port from wear. These cords are available from Fluke Networks.

GPU219.EPS

Figure 195. SmartLoop Test Connections for a Bi-Directional Test

Averaged Bi-Directional Results

Note

Unless otherwise noted, this section applies to bi-directional results from SmartLoop tests and bi-directional OTDR tests on single fibers.

Figure 196 shows an **EventMap** with averaged results from a bi-directional SmartLoop test.

- For averaged results, the tester shows the **EventMap** and the event **TABLE** tabs, but not the **OTDR** tab. The averaged results do not include **Ghost** events.
- For **Hidden** events, the tester calculates the average loss of the event that causes the hidden event, then divides that loss among the events inside the dotted lines. For example, if the average loss of an event is 0.24 dB, and the event causes one event to be hidden, then the average results show 0.12 dB for the event and 0.12 dB for the hidden event.
- For these measurements, the averaged results show the larger or the worst of the two results:
  - Distance between events: larger distance is shown
  - Reflectance: worst value is shown (for example, -30 dB is worse than -40 dB). The reflectance measurements from the unconnected ends are not used in the averaged results.
  - Segment length: larger value is shown
  - Segment attenuation: larger value is shown
  - Fiber length: larger value is shown
  - Overall loss: average value is shown
  - Optical return loss: worse value is shown (for example, 30 dB is worse than 40 dB)

- The **Port Connection Quality** in the averaged results is the rating from End 1.
- The tester does not calculate averaged results in some situations, for example if a launch, tail, or loopback cord was not detected or if the distance to the end was not the same in both directions.

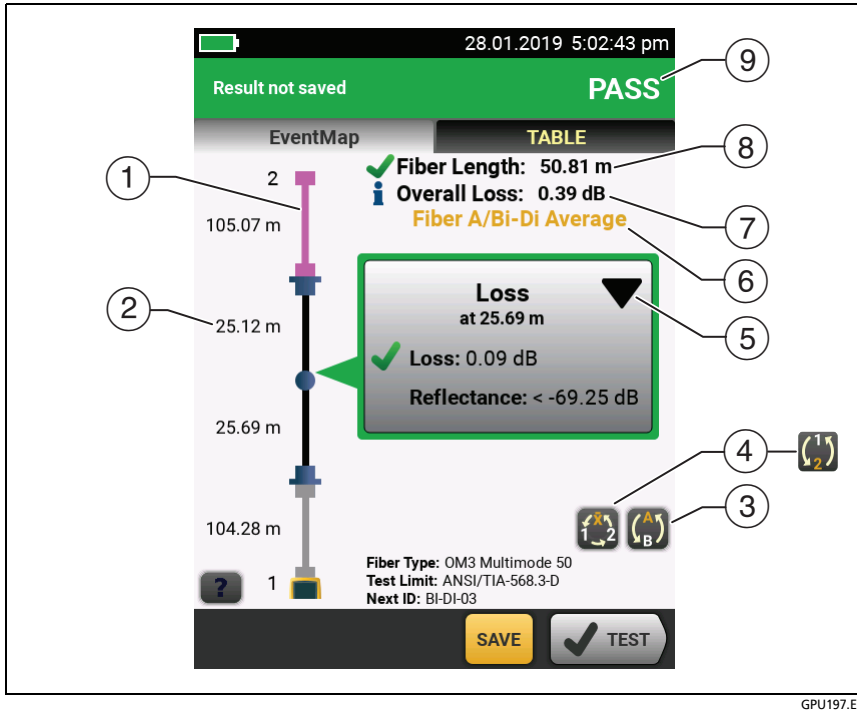

GPU197.EPS

Figure 196. EventMap for Averaged, Bi-Directional SmartLoop Results

① The purple fiber is the loopback cord.

② The longest segment length of the two directions.

③  Tap this button to see the results for the other fiber (**A** or **B**).

Touch  for 3 seconds to see a summary of the results from ends 1 and 2 on fibers A and B. To see the EventMap for a result in the list, tap the result.

④  This button shows with bi-directional SmartLoop results and bi-directional OTDR results from single fibers. Tap this button to see results from each direction (**End 1** or **End 2**) or the averaged results ($\overline{X}$).

 This button shows if you do a bi-directional test on a single fiber, but the tester does not calculate averaged results. This can occur for example if the distance to the end was not the same in both directions or if a span was defined when you did the test. Tap this button to see results from each direction (**End 1** or **End 2**). To remove the span definition, tap **Tools**, **Span**, then tap **Delete**.

⑤  The event editing function lets you edit loss events. See "How to Edit a Loss Event" on page 507.

⑥ This line shows which results are on the display. Use the selection buttons (④ and ⑤) to see other results.

⑦ **Overall Loss**: The average loss of the two directions.

⑧ **Fiber Length**: The longest length of the two directions.

⑨ **PASS/FAIL**: The overall result for the fibers.

- **PASS**: The averaged results passed. It is possible for one or both directions to have **FAIL** results, while the overall result is **PASS**.
- **FAIL**: The averaged results failed.

Note

*The tester does not use the bi-directional average results in the calculation for the % **Tested** that shows on the home screen.*

Chapter 13: OTDR Span and Event Editing Functions

Overview of Features

The span and event editing functions are available in the OptiFiber Pro and OptiFiber Pro HDR modules:

- The event editing function lets you edit loss events.
- The span function lets you limit OTDR results to a section of fiber that you define.

How to Edit a Loss Event

When you know that a **Loss** event is an APC connector, you can tap ▼ in the event's information window, then use the **Change Event Type** menu to change the event's type to **APC Connector**. See Figure 197. You can also change an edited event back to a **Loss** event.

Note

When you edit an event, the test result does not show that you made a change.

When you use a test limit for the OptiFiber Pro module: If you change a **Loss** *event to an* **APC Connector**, *the tester uses 0.75 dB as the loss limit for the connector. That is a standard loss limit for connectors in inside-plant applications. If you must use a different limit for APC connectors, make a custom test limit.*

PASS/FAIL Result for Edited Events

When you change a loss event's type, the tester changes the loss limit for the event and recalculates the event's results and the overall results. The recalculations can possibly change the **PASS**/**FAIL** results. For example (refer to Figure 197):

- You test a link and see a **Loss** event that has a loss of 0.53 dB. This causes a **FAIL** result because the limit for a loss event is 0.30 dB.
- You change the event to an **APC Connector**. Because the selected test limit has a loss limit of 0.75 dB for connectors, the result for the event changes to a **PASS**
- If the loss event was the only **FAIL** result on the link, the overall result will also change from **FAIL** to **PASS**.

Other Options for Editing Events

Use LinkWare PC to make these edits to events:

- Change an event to a splice, APC connector, or splitter.
- Add a 0 dB event to a trace where a splice or APC connector is present but has very low loss and does not show in the event table.
- Add a note to any event.
- Delete an event that has a loss of 0.35 dB or less. You can do this to remove small loss events that are not caused by a splice or APC connector. This makes the results show only the actual components in a link.

To edit events in LinkWare PC

Use the buttons on the **Events** tab in the full-sized **OTDR Trace Viewer** window. See the LinkWare PC online help for details.

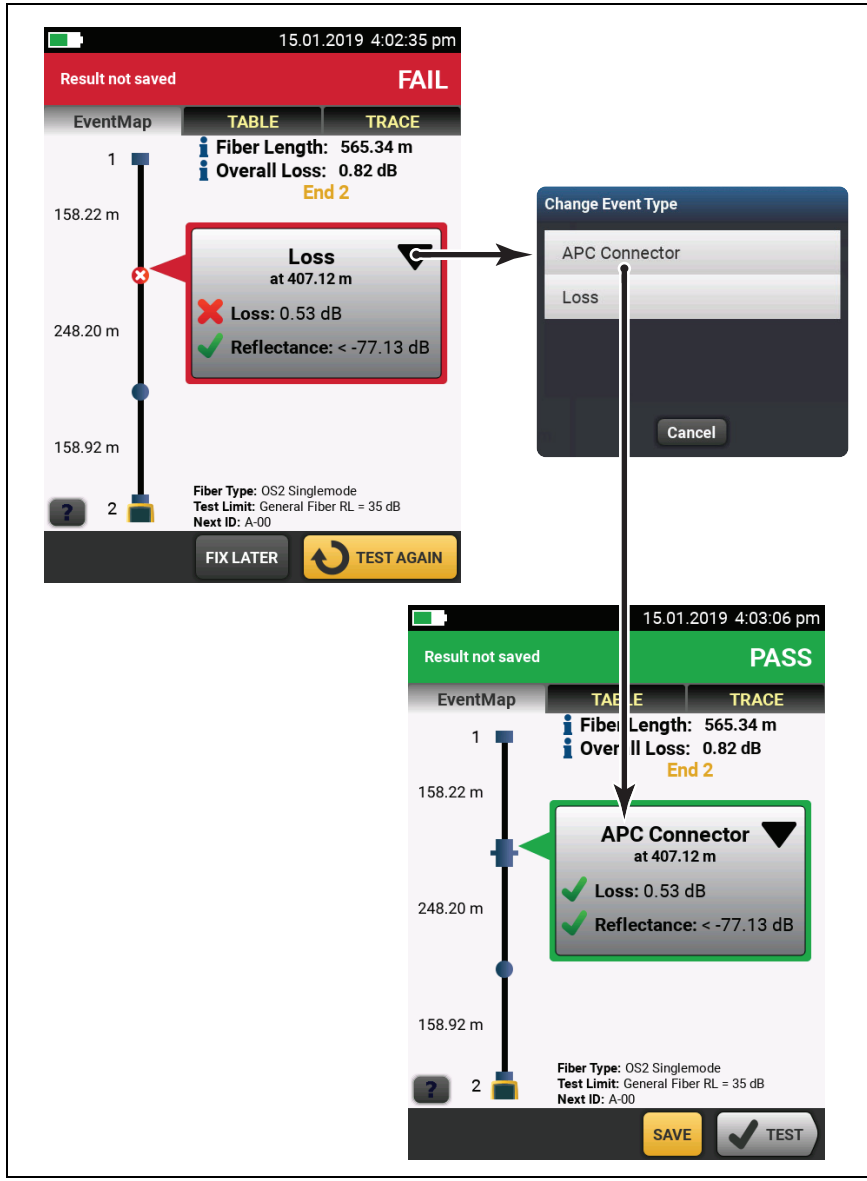

GPU237.EPS

Figure 197. How to Edit a Loss Event

Editing Events in Bi-directional Results

When you edit an event in a bi-directional result, the tester copies your change to the result you got from the other end and to the averaged result. The tester copies your change to these events:

- **Loss**
- **Reflection**
- **Gainer**
- **Ghost Source**
- **Hidden**

In some situations, the tester will not copy your change:

- The tester will not copy your change to events not listed above, such as **Launch**, **Tail**, and **Bend** events.
- The tester will not copy your change if it did not calculate averaged bi-directional results. This can occur, for example, if you did the **End 1** and **End 2** tests with different wavelengths or if a span was defined when you did the test.
- The tester will not copy your change to the results from the other end if there was not an event at the correct location. But the change will show in the averaged results.

How to Use the Span Function

The **Span** function on the **TOOLS** menu lets you get test results from a section of fiber that you define. For example, if one segment had a break and was spliced, you can do an OTDR test on the entire link, but make the test record show results for only the spliced segment.

You define the span before you do OTDR tests. The tester gives you results for only the span until you clear the span settings.

If you will test multiple links of different lengths, and must make sure that all spans include the end of the link, you can set the **Span Stop** location to a point beyond the end of the longest link.

When the Tester Will Not Use Your Span Settings

- The tester will not use your span settings if **Launch Compensation** is **On**.
- The tester will not use your span settings if you do a SmartLoop test because that test always uses **Launch Compensation**.

How to Define a Span

1. Tap **TOOLS**, then tap **Span**.
2. On the **SPAN** screen, tap **Set**.
3. On the **SET SPAN DISTANCE** screen, tap **Span Start** and **Span Stop** to define the span.
4. On the **SET SPAN DISTANCE** screen, tap **SAVE**.

How to Do a Test with Your Span Settings

1. Turn off **Launch Compensation**:
   a. On the home screen, tap the test setup panel.
   b. On the **CHANGE TEST** screen, tap **EDIT**.
   c. On the **TEST SETUP** screen, set **Launch Compensation** to **Off**.
   d. Tap **SAVE**, then tap **USE SELECTED.**
2. Do an OTDR test. Figures 198, 199, and 200 show OTDR results for a span.

Note

If you import the result into LinkWare PC, LinkWare PC adds "(S)" to the cable ID to show that the test used span settings.

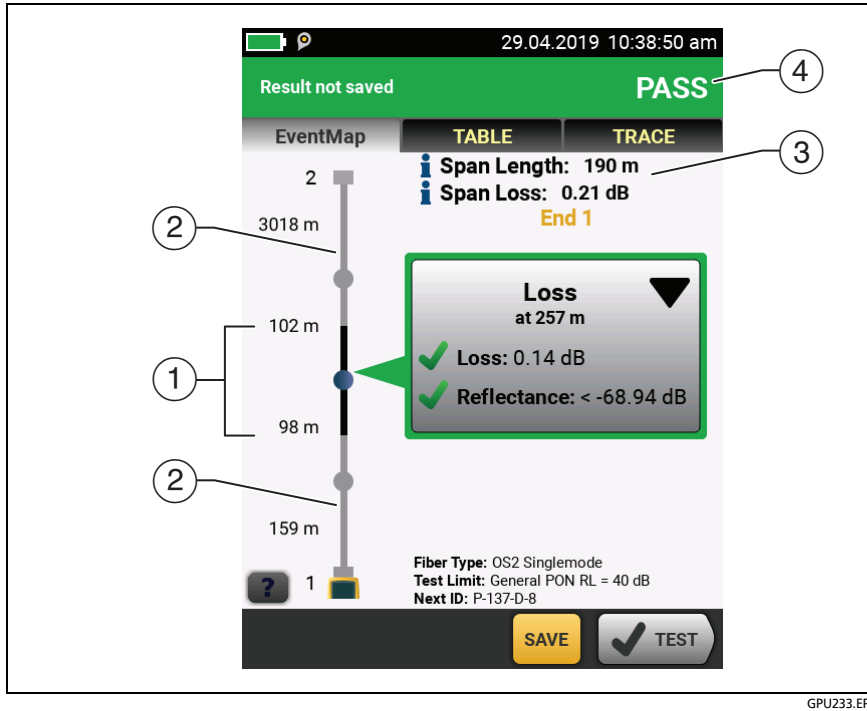

GPU233.EPS

Figure 198. EventMap for a Span

① The black section is the span defined by the **Span Start** and **Span Stop** locations. The span area shown is not to scale.

The distances show the lengths of segments between events, as on an **EventMap** with no span defined.

② The fiber outside of the span is gray. Measurements outside of the span do not have **PASS/FAIL** results.

③ The length and overall loss of the span.

④ **PASS**: All measurements in the span were within the limits.

FAIL: One or more measurements in the span exceeded its limit.

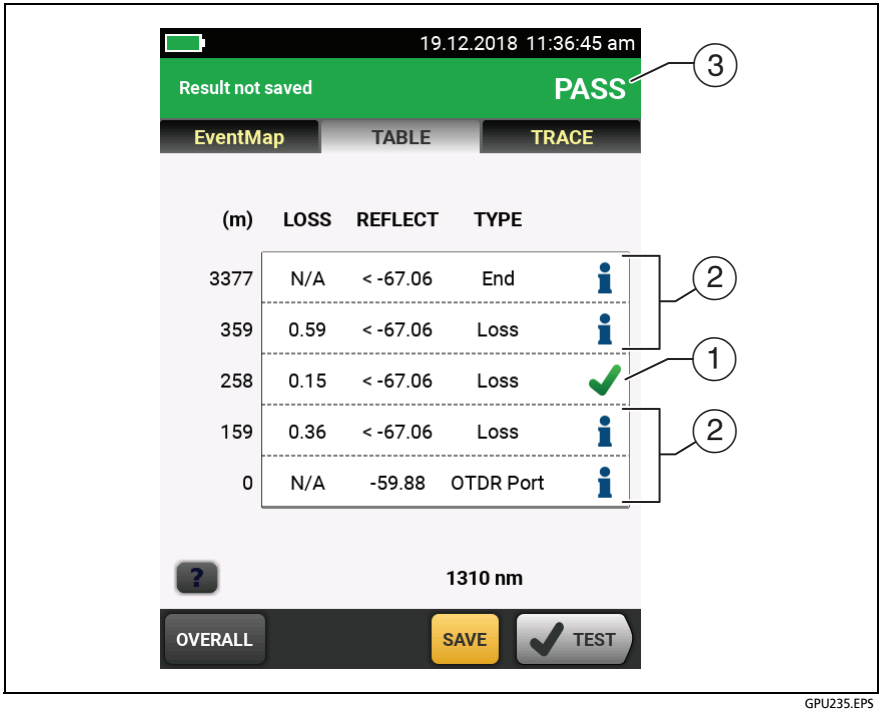

GPU235.EPS

Figure 199. Event Table for a Span

① Events in the span have **PASS/FAIL** results.

② Events outside of the span do not have **PASS/FAIL** results. The tester shows an ℹ for these events.

③ **PASS**: All measurements in the span were within the limits.

FAIL: One or more measurements in the span exceeded its limit.

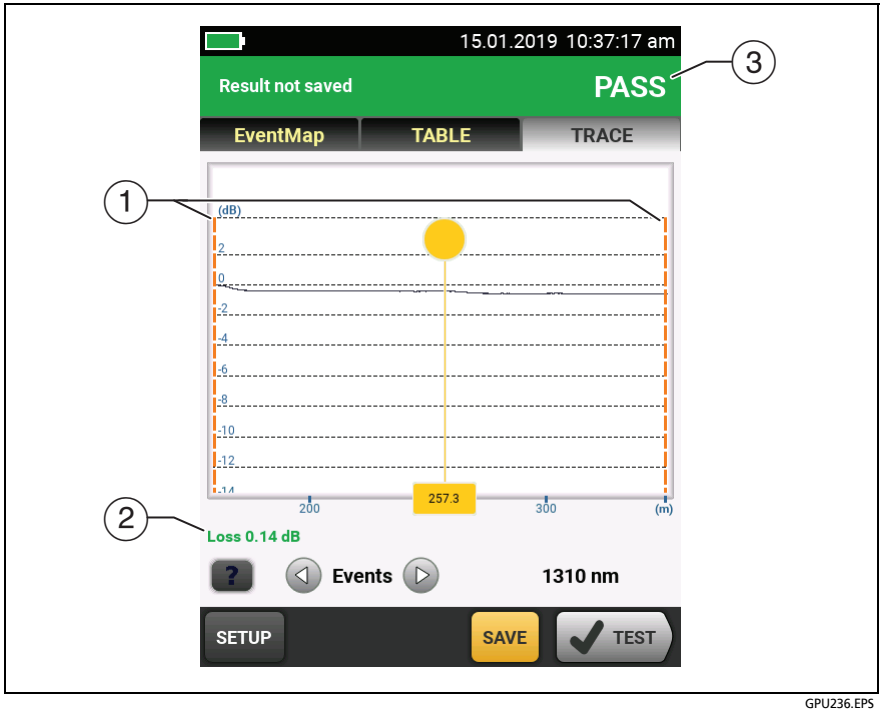

GPU236.EPS

Figure 200. OTDR Trace for a Span

① Orange, dashed lines show at the **Span Start** and **Span Stop** locations. The trace is zoomed so that the span section fills the screen.

The launch compensation markers never show with the **Span Start** and **Span Stop** markers because you must turn off launch compensation to use the span function.

② Measurements for events in the span show in green if the event passed, red if the event failed, or black is there is no limit for measurement.

Measurements for events outside of the span show in blue.

Note

When the **Span Stop** *location is in the middle of an event, the tester shows the loss for the entire event.*

③ **PASS**: All measurements in the span were within the limits.

FAIL: One or more measurements in the span exceeded its limit.

Bi-directional Tests with Span Settings

When you use span settings with a bi-directional test:

- If you want the span to include the same section of fiber from both ends, be sure to change the span settings when you do the test from the other end. For example, see Figure 201. A fiber is 100 km long, and the **Span Start** and **Span Stop** are 10 km and 40 km for **End 1**. To get results for the same section of fiber from **End 2**, set the **Span Start** and **Span Stop** to 60 km and 90 km.
- If you define a span, then do a bi-directional test on a fiber, you can see the results from both ends of the fiber, but the tester does not calculate averaged bi-directional results. See item ④ in Figure 167 on page 411.

How to Remove the Span Definition

Tap **Tools**, **Span**, then tap **Delete**.

How to Remove the Span Definition from a Test Result

1. Import the result into LinkWare PC.
2. Double-click on the result, then click **Full Size Trace Viewer**.
3. In the **OTDR Trace Viewer** window, click **Span** > **Clear** > **OK**, then click **Yes**.

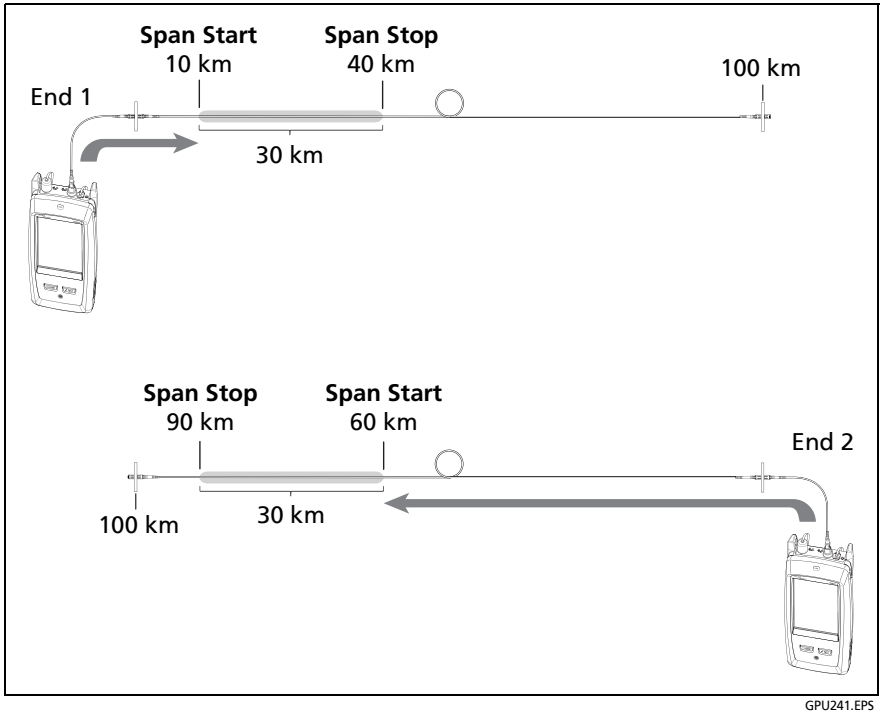

Figure 201. Span Settings for a Bi-directional Test

Chapter 14: The Visual Fault Locator

Visual Fault Locator Applications

The CertiFiber Pro™ OLTS modules and the OptiFiber® Pro OTDR modules include a visual fault locator that sends a red light down the fiber. The red light shows at the end of the fiber and at breaks, cracks, and sharp bends along the fiber.

The VFL also helps you quickly verify the continuity of fibers, identify connectors, and find faults along fibers and in connectors.

The VFL helps you do these tasks:

- Quickly verify the continuity of fibers.
- Identify the polarity of duplex connections.
- Identify connections in patch panels.
- See breaks and bad splices. These faults cause the fiber to emit red light.
- See high-loss bends. If you can see the light from the VFL at a bend in a fiber, the bend is too sharp.
- See connectors that have damaged fibers inside. A damaged fiber inside a connector causes a red light in the connector.
- Increase the quality of mechanical splices and pre-polished connectors: Before you seal the splice or connector, adjust the fiber alignment for the minimum amount of light where the fibers touch. (Refer to the instructions from the manufacturer when you make splices and connectors.)

How to Use the VFL

Figure 202 shows the equipment for tests with the visual fault locator.

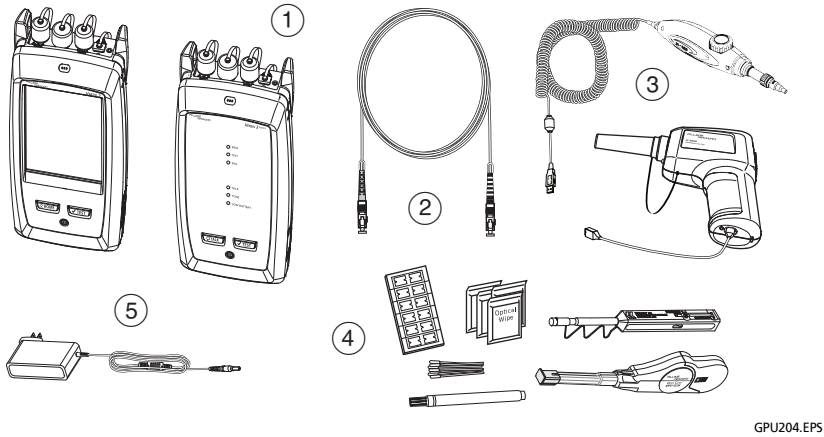

1. Main or remote tester with CertiFiber Pro or OptiFiber Pro module installed
2. One patch cord to connect the tester to the fiber (optional)
3. FI-1000 or FI-3000 video probe with USB connector
4. Fiber cleaning supplies
5. AC adapter (optional)

Figure 202. Equipment for Visual Fault Locator Tests

To use the visual fault locator

Note

You can connect the visual fault locator to connectors that have 2.5 mm ferrules (SC, ST, or FC). To connect to other ferrule sizes, use a test reference cord with the correct connector at one end and a SC, ST, or FC connector at the tester end.

1 Clean and inspect the connectors on the patch cord, if used, and the fiber to be tested.

2 Connect the fiber directly to the VFL port or use the patch cord to connect to the port.

3 Use the VFL button to turn on the visual fault locator (refer to Figure 203).

Or, on the home screen tap **TOOLS**, then tap **Visual Fault Locator (VFL)**.

On the main tester you can tap the **PULSE/OFF/CW** (continuous wave) button on the screen to change the modes of the VFL, or use the button as shown in Figure 203.

4 Look for the red light as shown in Figure 203.

5 To see the light that comes out of a connector, hold a white paper in front of the fiber connector.

Notes

The fiber connector at the VFL and the fiber near the connector can emit red light when there are no faults there because the light is strong at the VFL output.

The light from the VFL is possibly not visible through dark-colored fiber jackets.

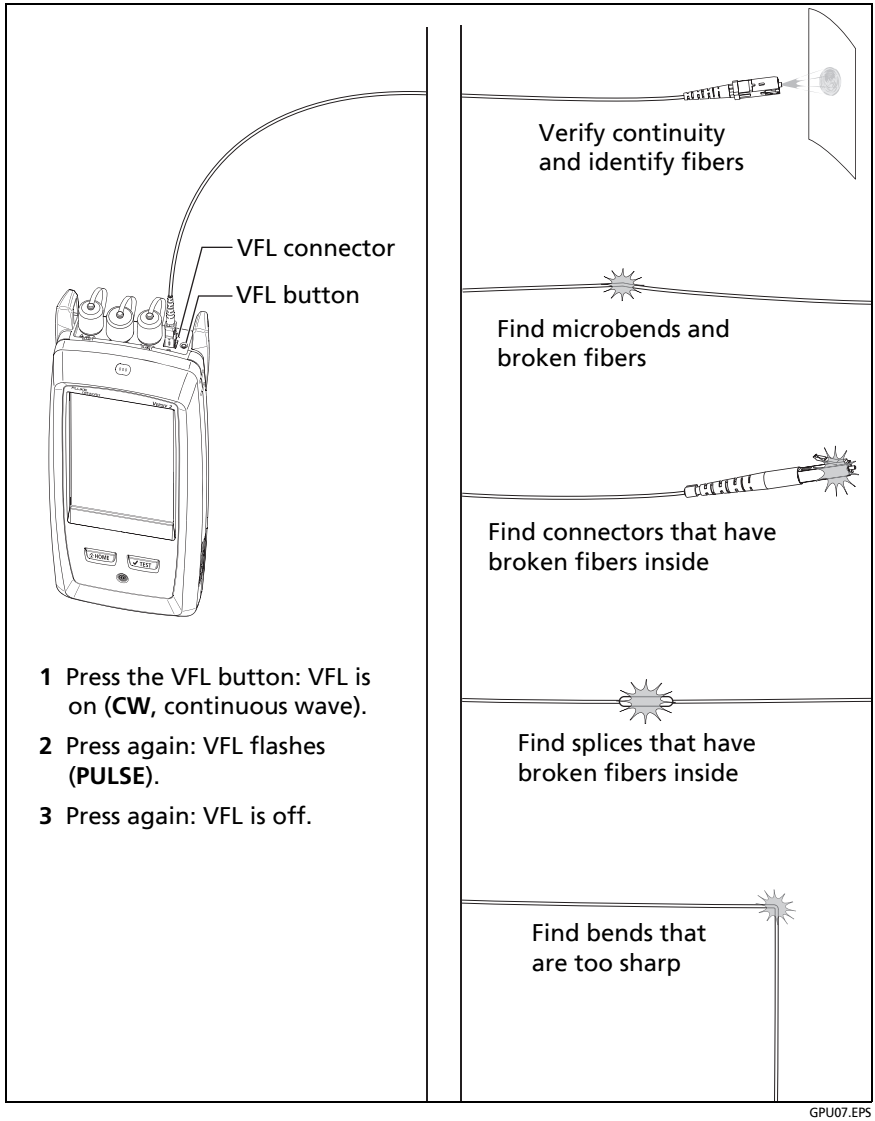

Figure 203. How to Use the Visual Fault Locator

Chapter 15: Diagnose Problems in Fiber Links

Common Causes of Problems in Fiber Links

Most problems in fiber links are caused by dirty, scratched, or damaged connectors, as shown in Table 18.

The table shows results of a survey of 89 contractors and private network owners. The results show what percentage of each group commonly found the faults listed.

Table 18. Causes of Failures in Fiber Links

Fault	Percentage of the Group that Commonly Finds the Fault	
	Network Owners	Contractors
Dirty end faces	80 %	98 %
Poor polishing	72 %	88 %
Broken connectors	40 %	86 %
Mislabeling	8 %	86 %
Shattered end faces	34 %	82 %
Bad splices	36 %	74 %
Excessive bends	6 %	66 %

Causes of Loss/Length Test Failures

Table 19. Causes of Loss/Length Test Failures

Loss measurement gives a FAIL result • One or more connectors is dirty, damaged, misaligned, or loose. The VFL can help you see some types of damage in connectors (Chapter 14). An OTDR, such as the Fluke Networks OptiFiber® Pro OTDR, can help you locate other types of faults (Chapter 11). • There is a kink, sharp bend, or crack in a test reference cord or the fiber under test. Use the VFL to see these faults. • The fiber has a bad splice. Use the VFL to see this fault. • For limits that give a calculated loss value, the number of connectors or splices on the **TEST SETUP** screen is too low • The wrong fiber type is selected on the **TEST SETUP** screen. • The reference is incorrect. Set the reference again. • For multimode test reference cords wound around mandrels, the mandrels are the wrong size. • For multimode test reference cords wound around mandrels, the cords are made from bend-insensitive fiber. • A test reference cord or fiber segment has the wrong core size. An OTDR can show you where the core size is wrong. • The test reference cords have PC or UPC connectors, but the fiber under test has APC connectors.
Loss is negative • The fiber ends were dirty when you set the reference. • You disconnected the test reference cord from a tester's OUTPUT port after you set the reference. • There was a kink in a test reference cord when you set the reference. • The connectors were loose when you set the reference. • The testers were much colder when you set the reference than during testing. • Some other problem caused a bad reference value. • If loss is negative, set the reference again and do the test again.

Table 19. Causes of Loss/Length Test Failures (continued)

A known length of cable measures too long or too short • The wrong fiber type is selected on the **TEST SETUP** screen. • The wrong test limit is selected on the **TEST SETUP** screen. • The index of refraction needs adjustment. To change the **IR** setting, tap **Fiber Type Settings** on the **TEST SETUP** screen.
Power meter measurement is too low • One or more connectors is dirty, damaged, misaligned, or loose. The VFL can help you see some types of damage in connectors (Chapter 14). An OTDR, such as the Fluke Networks OptiFiber® Pro OTDR, can help you locate other types of faults (Chapter 11). • There is a kink, sharp bend, or crack in a test reference cord or the fiber under test. Use the VFL to see these faults. • The source's output is modulated. • The test reference cord is the wrong type (SM or MM) or has the wrong core size.
Power meter measurement is too high The tester is connected to an active CATV fiber.
No connection in Smart Remote or Loopback mode when the fiber paths are complete. The remote is in Auto CertiFiber Pro mode, as shown by a flashing red and green LED below an OUTPUT port. To exit this mode, press the button on the module to make the LED flash green.

Causes of OTDR Test Failures

Table 20. Causes of OTDR Test Failures

A reflective event fails • The event is a dirty or damaged connector. Clean and inspect the endfaces, then do the test again. • The event is a connection with a dirty or damaged adapter. Clean the adapter and the endfaces or replace the adapter. • The event is a poorly-seated connector. Make sure all connections are tight. • A patch cord, launch/tail cord, or fiber segment has the wrong core size, backscatter coefficient, or mode field diameter. If the patch cords and launch/tail cords are the correct type, examine the OTDR trace for mismatched cable in the link. • The event is a bad fusion or mechanical splice or a sharp bend. Use the OTDR trace or event table to locate these faults. • The launch cord has PC or UPC connectors, but the link has APC connectors.
Overall loss is too high • There is one or more dirty or damaged connections in the link. Check the OTDR trace or event table for high-loss reflective events. • The wrong fiber type is selected on the **TEST SETUP** screen. • A patch cord, launch cord, or fiber segment has the wrong core size, backscatter coefficient, or mode field diameter. If the patch cords and launch cord are the correct type, do a bi-directional OTDR test and look for a gainer on the link. • The link has a bad fusion or mechanical splice or a sharp bend. Use the OTDR trace or event table to find these faults. • The launch cord has PC or UPC connectors, but the link under test has APC connectors.

Table 20. Causes of OTDR Test Failures (continued)

Fiber length fails or the length is incorrect • The fiber is broken or there is an open connection where the trace shows the fiber end. • The wrong fiber type is selected on the **TEST SETUP** screen. • The index of refraction needs adjustment. To change the **IOR** setting, tap **Fiber Type Settings** on the **TEST SETUP** screen. • The wrong test limit is selected on the **TEST SETUP** screen.
The overall result is FAIL, but no event shows FAIL, or an event shows FAIL, but does not exceed any limit • Some conditions make the OTDR test fail even when all measurements are within the limits. For example, the test fails if **Launch + Tail** compensation was enabled, but you did not connect a tail cord. These conditions show as warnings when the test is completed. To see warnings caused a **FAIL** result, tap  on the **OVERALL FIBER RESULT** screen (see Figure 154 on page 375). • The test limit includes a limit for the attenuation coefficient, and the attenuation coefficient of the fiber segment before an event is too high. To see the attenuation coefficient for the segment before an event, tap the event on the **EventMap** screen, tap the information window for the event, then tap the **SEGMENT ATTENUATION** tab on the **EVENT DETAILS** screen.

(continued)

Table 20. Causes of OTDR Test Failures (continued)

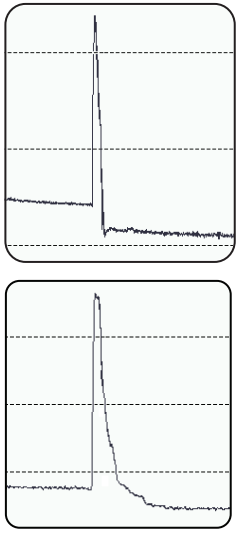

GPU33.EPS

The trace shows a large reflective event with high loss (top) or excessive tailing (bottom). The tester can possibly show it as the End event, though it occurs before the end of the link.

- The event is a dirty, scratched, cracked, misaligned, or unseated connector. Misaligned or unseated connectors can also cause large reflections that produce ghosts. Clean and inspect the connection, then do the test again.
- A good connector has a sharp bend or crack within its dead zone. The tester can possibly show a sharp bend as a break, especially at longer wavelengths or in Manual OTDR mode with smaller resolution settings.
- The event is a crack in the fiber. Use a visual fault locator to find the fault.
- The event is a bad fusion or mechanical splice or a sharp bend.
- The event is a connection between mismatched fibers (different backscatter coefficients, core sizes, numerical apertures, or other parameters). The top example could be caused by a larger core (on the left) connected to a smaller core. Do an OTDR test from the other direction and look for a reflective event that has a gain.
- The launch cord has PC or UPC connectors, but the link has APC connectors.

Table 20. Causes of OTDR Test Failures (continued)

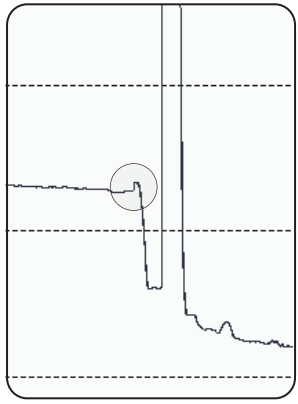 GPU32.EPS	The trace shows a small reflective event with high loss. Can possibly show as an end event though it occurs before the end of the link. Can be caused by very sharp bend, a crack, or a mechanical splice with high loss. If the event is a bend, it usually has higher loss at a longer wavelength. Use a visual fault locator to verify the problem. This example shows a sharp bend that occurs before a connector.
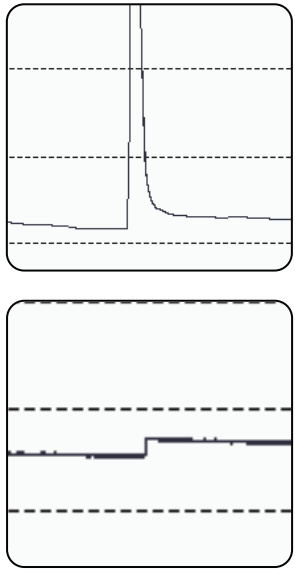 GPU50.EPS	The trace shows an apparent increase in optical power (a "gainer"). A gainer does not cause a test failure unless it exceeds a limit, but it can indicate a problem such as a connection or splice between mismatched fibers (different backscatter coefficients, core sizes, numerical apertures, or other parameters). The top example shows a smaller core size connected to a larger core size. If you do a test from the other end, you would see a large reflective event with more loss than a connector should have. The bottom example shows a splice between smaller and larger core sizes.

(continued)

Table 20. Causes of OTDR Test Failures (continued)

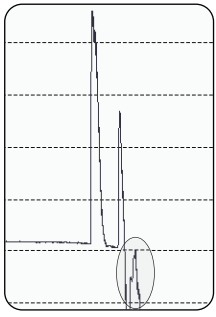

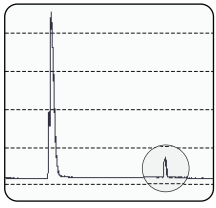

GPU51.EPS

Top figure: Ghost after the end of the link

These are not listed in the event table and usually do not indicate a fault in the link.

Bottom figure: Ghost in the middle of the link

Ghosts that occur in the middle of the link are listed in the event table, along with the source of the ghost. These can be caused by the following:

- A dirty connector
- A highly-reflective connector
- A UP or UPC connector mated to an APC connector
- A connector that is not seated properly.
- A connector that is wet with cleaning solvent.

A poorly-seated connector usually shows a large loss, as shown in the example. A connector with the wrong type of polish can also cause large reflections that cause ghosts.

Ghosts caused by hidden events may not show as ghosts in the event table.

On traces with multiple ghosts, possibly only the strongest ghost source shows in the event table. You can usually determine that other reflections are ghosts because they occur at multiples of distances to connectors and they show almost no loss. Multiple ghosts from the same source are spaced equally apart.

Chapter 16: Manage Test Results

View Saved Results

You can view the results in a project, or see a summary of the results in all projects.

On the home screen, tap the **RESULTS** icon. The **RESULTS** screen shows the results in the active project. See Figure 204.

To view results saved on a USB flash drive, connect the drive, then tap **RESULTS**, **TRANSFER**, **USB Flash Drive**, **Import**. See "Manage Results on a Flash Drive" on page 538.

To organize results and make reports you can give to customers, use LinkWare™ PC software.

To manage results in the cloud from a desktop or mobile device, use the LinkWare Live web application. See Chapter 18.

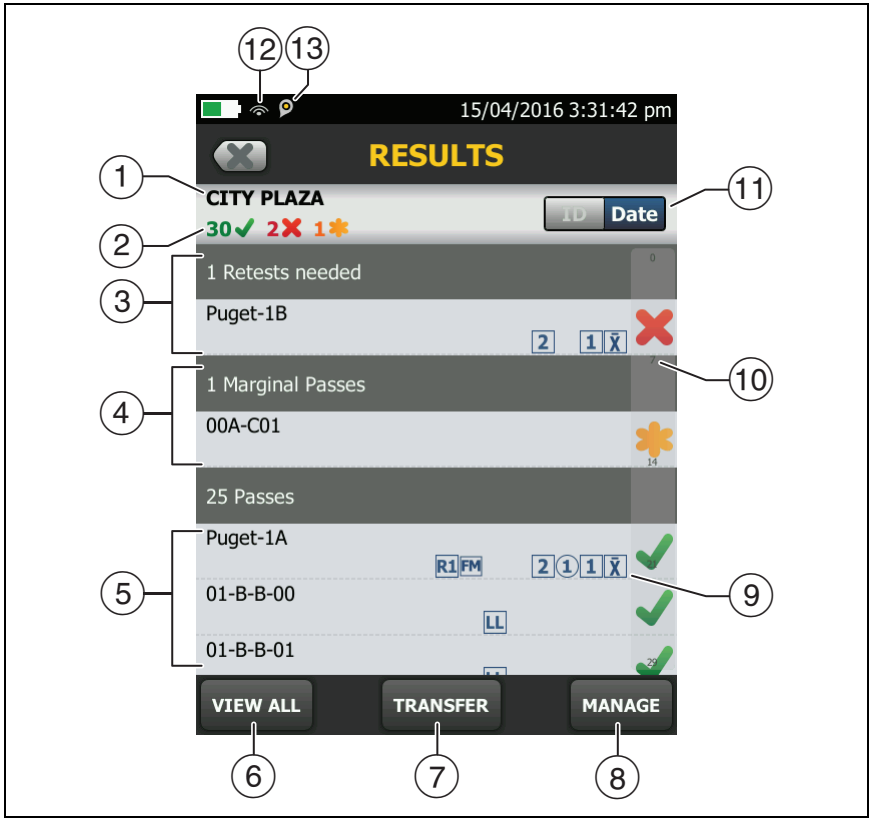

GPU24.EPS

Figure 204. RESULTS Screen

① The name of the active project.

② : The number of results that passed. This includes individual results for each ID and tests that have an result.

: The number of results that failed. This includes individual results for each ID.

: The number of DSX CableAnalyzer results that have **PASS*** results. **PASS*** results have measurements within the range of accuracy uncertainty for the tester. See "PASS*/FAIL* Results" on page 101.

Note

IDs can contain multiple results. So, these numbers can be more than the number of IDs saved.

③ The cable IDs that have **FAIL** results and must be tested again. Because some IDs can have one or more tests that failed, the number at the top of this screen (②) can be more than the number of retests needed.

④ The copper cable IDs that have measurements within the range of accuracy uncertainty for the tester. See "PASS*/FAIL* Results" on page 101.

⑤ The cable IDs that have an overall **PASS** or result. Because some IDs can have one or more tests that passed or have an status, the number at the top of this screen (②) can be more than the number of passes.

IDs that start with "TRC" are from verification tests on fiber test reference cords. These IDs show the date and time of the test.

⑥ Tap **VIEW ALL** to see a summary of the results in all the projects in the tester.

⑦ **TRANSFER** lets you export or import results to or from a flash drive, and delete results on the flash drive. The **TRANSFER** function also lets you sync project setups and results with LinkWare Live.

⑧ Tap **MANAGE** to delete or rename results that are in the tester.

⑨ The icons show the types of fiber test results that the result contains:

No icon: DSX CableAnalyzer results from copper cabling.



Loss/length results from a CertiFiber Pro OLTS module.



Power meter results from a CertiFiber Pro OLTS module.



OptiFiber Pro OTDR results from End 2 and End 1. The OTDR result can be from an **Auto**, **Manual**, **SmartLoop**, or **DataCenter OTDR** test.



Averaged results from a bi-directional OTDR test.



FiberInspector results from End 2 and End 1.



FaultMap results from an OptiFiber Pro OTDR module.

Real Time Trace results from End 2 and End 1 from an OptiFiber Pro OTDR module.

⑩ The scroll bar shows when the list of results is long. To use the scroll bar, tap on the bar or slide your fingertip on the bar. For example, to see the 12th result in the list, tap on “12” in the scroll bar. When you slide your fingertip on the bar, the number of the result you can see is next to your fingertip.

⑪ Tap the **ID/Date** control to sort the results by cable ID or by date. When you sort by ID, the results show in ascending order. When you sort by date, the latest result is at the top of the list.

⑫ These icons show when you connect the tester to a network to use Fluke Networks cloud services:

 The tester is connected to a wireless network.

 The tester is connected to a wired network.

See Chapter 18.

⑬  The asset management icon shows when the owner of a LinkWare Live account has enabled the asset management service for the tester. See “Sign Your Tester Out of LinkWare Live” on page 597.

How to Add a Result to a Saved Result

You can save the results from different tests in one cable ID. For example, you can save CertiFiber Pro results and FiberInspector results together in one ID.

When you add results, these settings used to get the results must agree with the settings in the saved result:

- Test limit
- Fiber categories (single-mode/multimode, core size, category)
- Index of refraction (makes a warning you can override)

If the settings do not agree, the tester shows a warning.

To add results for a different End setting

1 Do the test, then tap **SAVE**.

2 On the **SAVE RESULT** screen, select **End 1** or **End 2**, make sure the **Cable ID** and **End** name are correct, then tap **SAVE**.

To add results from a different test

1. On the home screen, tap the test setup panel.
2. On the **CHANGE TEST** screen, tap a test, then tap **USE SELECTED**.
   - If the ID set has a **Last ID**, the home screen shows the first ID in the set that does not have results for the test you selected.
   - If the ID set does not have a **Last ID**, tap the **Next ID** panel, tap the **Next ID** box on the **CHANGE ID** screen, enter the first ID for the set of saved results, then on the **CHANGE ID** screen, tap **DONE**.
3. Tap **TEST** or press ✔TEST, then save the result.

How to Replace a Saved Result that Failed

To use the same test settings that were used for the saved result

1. On the home screen, tap the **RESULTS** icon.
2. On the **RESULTS** screen, tap a result that failed.
3. Tap **TEST AGAIN**.
4. When the test is completed, and if **Auto Save** is on, the tester asks you if you want to overwrite the results. Tap **Yes**.

   If **Auto Save** is off, tap **FIX LATER** (if the test failed) or **SAVE** (if the test passed) to save the result.

To replace a result with a result that uses different test settings

1. Turn off **Auto Save**.
2. Make sure that the home screen shows the project that contains the result you want to replace.
3. Select the necessary test settings.

4 Do the test, tap **FIX LATER** (if the test failed) or **SAVE** (if the test passed), then enter the ID of the saved result.

5 The tester asks you if you want to overwrite the results. Tap **Yes**.

Delete, Rename, and Move Results

Before you delete, rename, or move results, select the project that contains the results and go to the **MANAGE RESULTS** screen:

1 On the home screen, tap the **RESULTS** icon. The **RESULTS** screen shows the results in the active project.

2 To see the results in another project, tap **VIEW ALL**, then tap a project.

3 Tap **MANAGE** to see the **MANAGE RESULTS** screen.

Delete Results

1 On the **MANAGE RESULTS** screen, select the results you want to delete.

To select all the tests that failed or all the tests that passed, tap **Select All Retests** or **Select All Passes**.

2 Tap **DELETE**, then tap **DELETE** in the confirmation dialog.

Rename Results

1 On the **MANAGE RESULTS** screen, select one result to rename.

2 Tap **RENAME**.

3 Enter a new name, then tap **DONE**.

Move Results to a Different Project

1. On the **MANAGE RESULTS** screen, select the results you want to move.
2. Tap **MOVE**.
   - To move the results to a project shown in the list, tap the project name, then tap **MOVE** in the confirmation dialog.
   - To make a new project and move the results to the new project, tap **NEW PROJECT**, enter a project name, tap **DONE**, then tap **MOVE** in the confirmation dialog.

Note

When you move results to a different project, that project becomes the active project.

Manage Results on a Flash Drive

You can export or import results to or from a flash drive, and delete results on the flash drive.

To export or import project settings along with results, see "Manage Projects on a Flash Drive" on page 585.

⚠Caution

- **Do not remove the USB flash drive while the LED on the drive flashes. Doing so can corrupt the data on the drive.**
- **You can lose a USB flash drive, cause damage to it, or accidentally erase the contents of the drive. Thus, Fluke Networks recommends that you save no more than one day of test results on a flash drive or that you upload results to LinkWare Live.**

Note

The tester reads only USB drives that use the FAT format.

1. Connect a USB flash drive to the type A USB port. The tester makes a bell sound when it detects the drive.
2. On the home screen, tap the **RESULTS** icon, then tap **TRANSFER**.
3. On the **TRANSFER RESULTS** screen, tap **USB Flash Drive**, then tap a function.
   - **Export**: On the **EXPORT RESULTS** screen, select **New** or **All**, select the project that contains the results you want to export to the flash drive, then tap **EXPORT**.

     New: Export only results that do not have the same IDs as results that are already on the flash drive.

     All: Export all results from the projects you select.

     Note

     Cable IDs are case-sensitive. For example, the tester saves result with the names "A0" and "a0" in two different records.
   - **Import**: On the **IMPORT RESULTS** screen select the project that contains the results you want to import from the flash drive, then tap **IMPORT**.
   - **Delete**: On the **DELETE RESULTS** screen select the project that contains the results you want to delete on the flash drive, then tap **DELETE**.

Upload Results to a PC

Note

To upload results to the cloud for transfer to a PC, use the LinkWare Live web application. See Chapter 18.

To upload results to a PC from the tester or a flash drive, use LinkWare PC software.

1. Install the latest version of LinkWare PC software on the PC.
2. Turn on the tester and start LinkWare PC on the PC.
3. Use the USB cable supplied to connect the Micro USB port on the tester to a type A USB port on the PC. See Figure 205.
4. Or connect a USB flash drive to the PC.
5. On the LinkWare PC toolbar, click , then select a product, or select **Test Files** (**.tst**) to upload from a flash drive.
6. In the **Import** dialog box in LinkWare PC, select options for the location and the number of results to import.

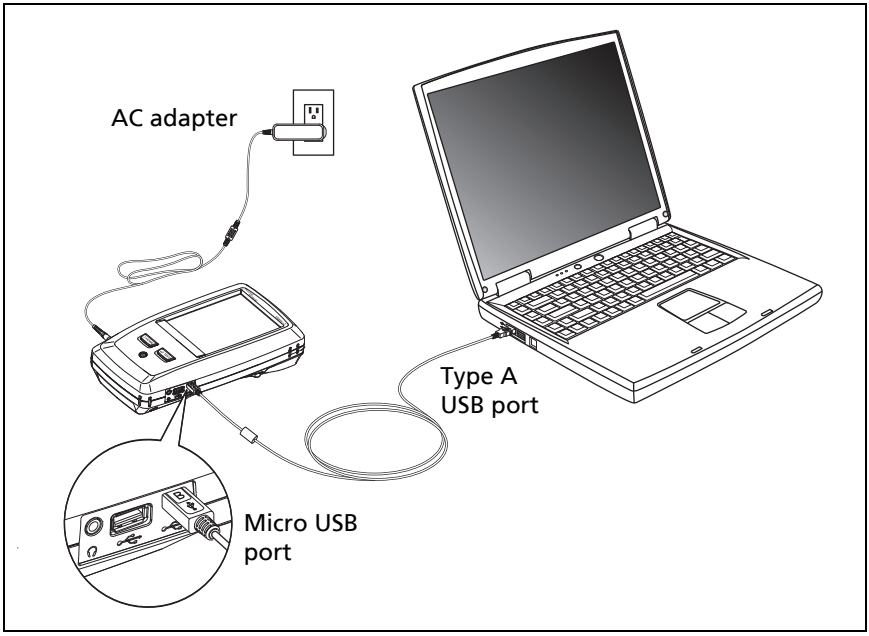

GPU46.EPS

Figure 205. How to Connect the Tester to a PC

Memory Capacity

These are the approximate numbers of tests you can save in a main tester:

The capacity available for test results depends on the space used by the software and custom test limits in the tester.

The number of test results you can save decreases if you save more tests in each record, or if you save tests that use more memory. For example, records that include OTDR tests and images from the video probe use more memory than records that include OTDR tests and FaultMap tests.

To make more memory available, you can export results to a USB flash drive, then delete the results in the tester. See "Manage Results on a Flash Drive"on page 538.

View the Memory Status

To see the memory status

On the home screen, tap the **TOOLS** icon, then tap **Memory Status**.

The **MEMORY STATUS** screen shows these values:

- The percentage of memory available
- The number of test records that are saved
- The number of .id files that have been downloaded to the tester from LinkWare PC software
- The memory space taken by other files, such as the databases for projects and test limits

About LinkWare Live

The LinkWare Live web application lets you manage your results and projects from a desktop or mobile device, locate your testers in the field, and more. To get started with LinkWare Live, see Chapter 18 or go to go to **www.linkwarelive.com/signin**.

Chapter 17: Use Projects

Why Use Projects?

The tester's ProjX™ management system lets you set up projects that help you monitor the status of a job and make sure that your work agrees with the requirements of the job.

You can use a project to do these tasks:

- Specify the tests that are necessary for a job.
- Specify settings for tests.
- Specify an operator for the job.
- Make sets of sequential IDs to use as names for test results.
- Automatically save test results with IDs from a set.
- Add the results from other necessary tests to each saved result in the project.
- See which IDs do not have results for a specified test.
- See what percentage of a job is completed.
- See how many links passed and how many failed.
- Keep the test results from a job in one place for easy access.

When you use a project, you can do tests and use IDs that are not specified in the project if necessary. You can also easily change the settings in a project if necessary.

Notes

It is not necessary to install a module to set up a project for the module. The tester keeps all settings in the main tester.

To manage projects in the cloud, use the LinkWare Live web application. See Chapter 18.

Tutorial: Make a New Project

To start a new project, tap the **PROJECT** panel on the home screen. Figure 206 shows the **PROJECT** screen and describes the items you enter to make a project.

The tester can have up to 100 projects.

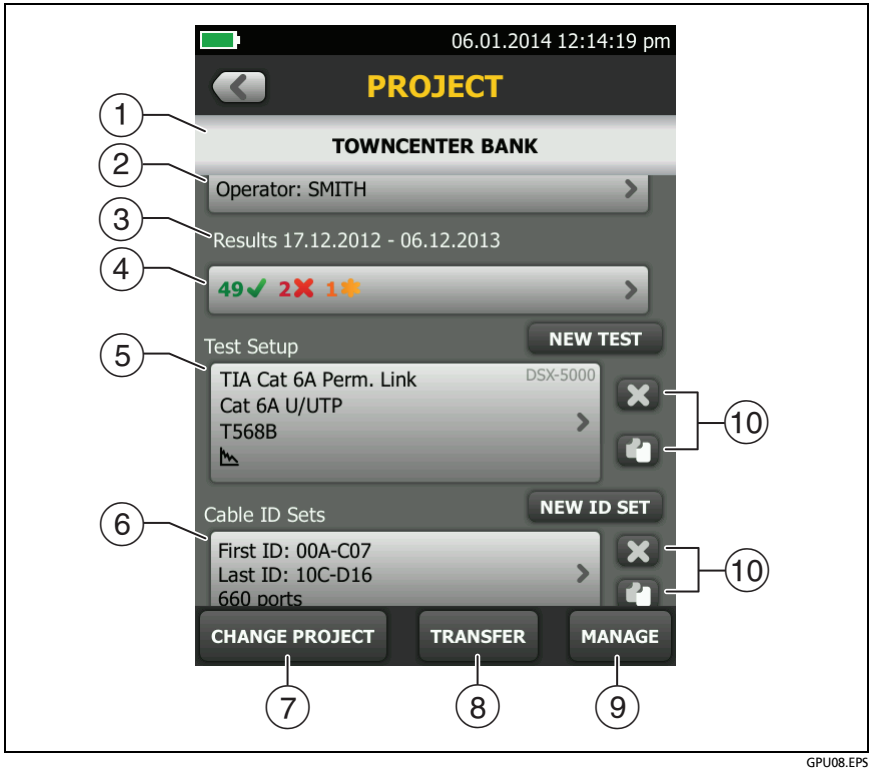

GPU08.EPS

Figure 206. PROJECT Screen

① The name of the project. See also item ⑨.

Projects you download from LinkWare Live include the organization name. They can also include subproject names. On the tester's **PROJECT** screen, these names show in this format: **Organization Name>>Project Name>>Subproject Name**.

See "About Project Names from LinkWare Live" on page 547.

② **Operator**: The name of the person who will do the tests for the project. For each operator you can also enter the email address that the operator will use as an ID to sign in to LinkWare Live.

③ The date range for the results in the project.

④ **Results**: A summary of the test results in the project:

: The number of tests that failed.

: The number of tests that passed.

: The number of results from tests on twisted pair cable that have **PASS*** results. **PASS*** results have measurements within the range of accuracy uncertainty for the tester. See "PASS*/FAIL* Results" on page 101.

To see the results, tap the panel.

⑤ **Test Setup**: The tests that are necessary for each cable in the project.

To add a test to the project, tap **NEW TEST**.

For information about twisted pair test settings, see Chapter 3. For information about OTDR test settings, see Chapter 11.

⑥ **Cable ID Sets**: The sets of IDs the tester can use for the names of test results. Each ID set is for either copper or fiber cable.

To add a set of IDs to the project, tap **NEW ID SET**. See "How to Make ID Sets" on page 578.

⑦ To use a different project, tap **CHANGE PROJECT**, then tap a project.

To make a new project, tap **CHANGE PROJECT**, then tap **NEW PROJECT**.

⑧ **TRANSFER** lets you export or import projects to or from a flash drive, and delete projects on the flash drive. The project data includes all project settings and test results.

⑨ **MANAGE** lets you rename, copy, or delete a project that is in the tester:

- **Rename**: Lets you give the project a new name. The tester saves all the settings and test results in the project with the new name.
- **Copy**: Lets you use the settings in the project to start a new project. The tester does not put test results into the new project.
- **Delete**: Lets you delete the project and all the test results in the project. The tester shows a warning if you have uploaded less than 100% of the results to a PC.

⑩ To delete the test setup or ID set, tap . To copy the test setup or ID set so you can edit it to make a new one, tap .

Notes

If you delete an imported ID set from a project, the ID set is still available in the tester. To delete imported ID sets from the tester, use LinkWare PC software. See "Delete an Imported ID Set" on page 583.

*A project must have at least one **Test Setup** and one **Cable ID** set. If you delete them all, the tester makes a default **Test Setup** and **Cable ID** set.*

About Project Names from LinkWare Live

Projects you download from LinkWare Live include the organization name. They can also include subproject names. On the tester's **PROJECT** screen, these names show in this format: **Organization Name>>Project Name>>Subproject Name**.

LinkWare Live will not use organization or subproject names you create on the tester. If you use the format "**Organization Name>>Project Name>>Subproject Name**" to enter names on the tester, then sync the project to LinkWare Live, LinkWare Live will use all of the names as the project name.

Step 1: Give the Project a Name

1-1 On the home screen, tap the **PROJECT** panel. The **PROJECT** screen shows the active project.

1-2 Tap **CHANGE PROJECT**, then tap **NEW PROJECT**.

1-3 Use the keyboard to enter a name for the project, then tap **DONE**.

Step 2: Specify an Operator

The operator is the person who will use the project to do a job.

2-1 On the **PROJECT** screen, tap the **Operator** panel, then select or add an operator:

- To select a different operator, tap a name in the **OPERATOR** list.
- To add an operator to the list, tap **NEW OPERATOR**, and use the keyboard to enter a name.

2-2 Optional: Enter the email address that the operator will use as an ID to sign in to LinkWare Live.

2-3 When you are finished, tap **DONE**.

2-4 To go back to the **PROJECT** screen, tap the name of the operator you want to use.

Step 3: Set up Tests for the Project

A project includes the tests and settings for the tests that are necessary for a job. If you do not specify settings for a test, the tester uses the default settings.

For this tutorial, your project will include tests for twisted pair cable and fiber optic cable. It is not necessary to attach a copper or fiber module before you set up a test for that module.

To set up a twisted pair test for the project

1 On the **PROJECT** screen, tap **NEW TEST**.

2 If the **TEST SETUP** screen does not show **DSX-8000** or **DSX-5000**, tap **Module**.

If a module is not attached, the **MODULE** screen shows.

3 On the **MODULE** screen, tap the correct DSX CableAnalyzer module.

4 On the **TEST SETUP** screen, select and change the test settings as necessary for a test on twisted pair cable. For information about twisted pair test settings, see "Settings for Twisted Pair Tests" on page 84.

5 When you have completed your selections for the twisted pair cable test, tap **SAVE** on the **TEST SETUP** screen.

To set up a fiber loss/length test for the project

1 On the **PROJECT** screen, tap **NEW TEST**.

2 If the **TEST SETUP** screen does not show a CertiFiber Pro module, tap **Module**.

If a module is not attached, the **MODULE** screen shows.

3 On the **MODULE** screen, tap a CertiFIber Pro module.

4 On the **TEST SETUP** screen, make sure the **Test Type** shows **Smart Remote**. If it does not, tap **Test Type**, then tap **Smart Remote**.

5 On the **TEST SETUP** screen, select and change the test settings as necessary for the loss/length test.

6 For this tutorial, set **Bi-directional** to **Off**.

For information about other loss/length test settings, see "Settings for Loss/Length Tests on Fiber" on page 271.

7 When you have completed your selections for the **Smart Remote** test, tap **SAVE** on the **TEST SETUP** screen.

To set up an OTDR test for the project

1 On the **PROJECT** screen, tap **NEW TEST**.

2 If the **TEST SETUP** screen does not show an OptiFiber Pro module, tap **Module**.

If a module is not attached, the **MODULE** screen shows.

3 On the **MODULE** screen, tap an OptiFiber Pro OTDR module.

4 On the **TEST SETUP** screen, make sure the **Test Type** shows **Auto OTDR**. If it does not, tap **Test Type**, then tap **Auto OTDR**.

5 On the **TEST SETUP** screen, select and change the test settings as necessary for the **Auto OTDR** test.

For information about OTDR test settings, see "Settings for OTDR Tests" on page 331.

6 For this tutorial, set **Launch Compensation** to **Off**.

7 When you have completed your selections for the **Auto OTDR** test, tap **SAVE** on the **TEST SETUP** screen.

Step 4: Make ID Sets for Twisted Pair and Fiber Cabling

To see the CABLE ID SETUP screen

1 On the home screen, tap the **PROJECT** panel, then tap **NEW ID SET** on the **PROJECT** screen.

2 Or, on the home screen, tap the **Next ID** panel, tap **CHANGE CABLE IDs**, then tap **NEW ID SET** on the **CHANGE CABLE IDs** screen (see Figure 207 on page 553).

When you make cable ID sets, you set up these items for the project (see Figure 208 on page 554):

- Sets of IDs to use when you save test results. For example, you can make one set of IDs for multimode fibers and another for twisted pair copper cables.
- For projects that use an OptiFiber Pro or CertiFiber Pro module, you specify the tests to do for each ID. As you use the project, the tester shows the percentage of the necessary tests you have completed. It also shows the IDs that do not have results for each test.

For this tutorial, your project will include ID sets for 12 twisted pair cables and 10 fiber optic cables (5 duplex fiber links). It is not necessary to attach a copper or fiber module before you set up an ID set for that module.

To make a cable ID set for tests on twisted pair cabling

1 On the home screen, tap the **PROJECT** panel, then tap **NEW ID SET** on the **PROJECT** screen.

2 For this tutorial, you will make an ID set that has 12 IDs for twisted pair cabling.

   a. On the **CABLE ID SETUP** screen (Figure 208 on page 554), tap the box under **First ID**, use the keyboard to enter B-00**.**

   b. Tap the box under **Last ID**, use the keyboard to enter D-03, then tap **DONE**.

   c. Make sure that **Copper** is selected under **Select Media**.

Note

You can use ID sets you make for copper media only when you do tests on copper cabling.

   d. Tap **REVIEW**. The **CABLE ID REVIEW** screen shows the ID set and the total number of IDs.

3 To save the ID set, tap **SAVE** on the **CABLE ID REVIEW** screen.

To make a cable ID set for tests on fiber cabling

1 On **PROJECT** screen, tap **NEW ID SET**.

2 For this tutorial, you will make an ID set that has 10 IDs for 5 duplex fiber links:

   a. On the **CABLE ID SETUP** screen (Figure 208 on page 554), tap the box under **First ID**, use the keyboard to enter 1A.

   b. Tap the box under **Last ID**, use the keyboard to enter 5B, then tap **DONE.**

   c. Under **Select Media,** tap **Fiber**. The screen shows the tests you can do with the OptiFiber Pro and CertiFiber Pro modules. The tester uses these settings to calculate how many tests you have completed in the project.

   d. Tap **End 1** and **End 2** for the **OTDR** test and tap the **Loss/ Length** test.

Note

You can use ID sets you make for fiber media only when you do tests on fiber cabling.

   e. Tap **REVIEW**. The **CABLE ID REVIEW** screen shows the ID set, the total number of IDs, and the tests you specified for the ID set.

3 To save the ID set, tap **SAVE** on the **CABLE ID REVIEW** screen.

4 On the **PROJECT** screen, delete the default ID set **Next ID: 001**.

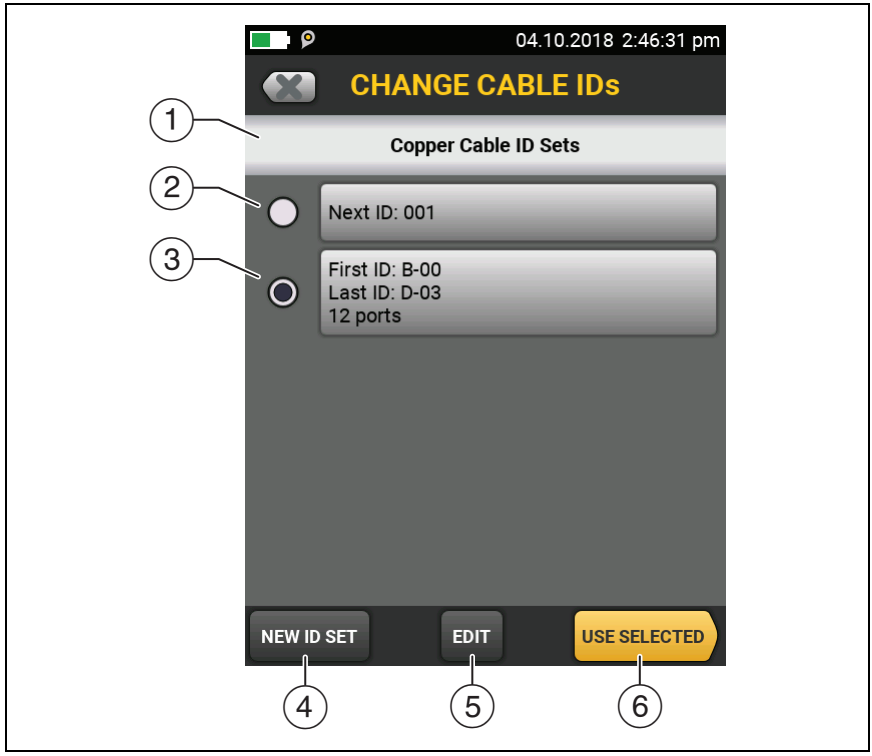

Figure 207. CHANGE CABLE IDs Screen

① The screen shows the ID sets, copper or fiber, for the type of test setup that shows on the home screen.

② The ID set "001" is the default set the tester makes if no other ID sets are in the project

③ To select an ID set, tap the ID set.

④ To add an ID set to the project, tap **NEW ID SET**.

⑤ To edit an ID set, tap the set, then tap **EDIT**.

⑥ To use the selected ID set, tap **USE SELECTED**.

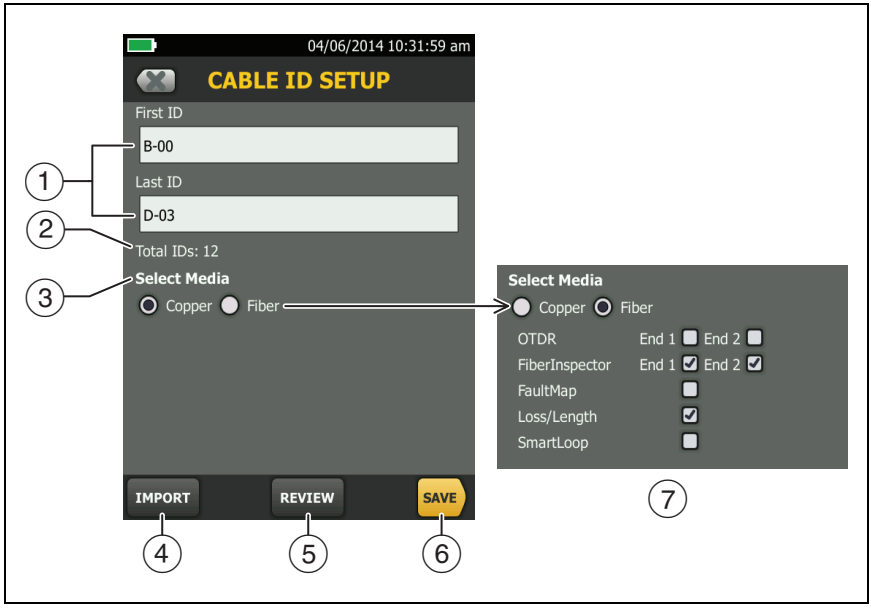

GPU56.EPS

Figure 208. CABLE ID SETUP Screen (after you enter the first and last IDs)

① **First ID** and **Last ID**: The first and last IDs in a set of sequential IDs. See "How to Make ID Sets" on page 578.

If you do not enter a **Last ID** when you make an ID set, the tester will increment the **First ID** to make subsequent IDs. When you use an ID set that does not have a **Last ID**, the set under **IDs Untested** on the **CHANGE ID** screen shows only the next ID.

Note

The tester does not increment symbols or accented characters.

② **Total IDs**: The number of IDs in the set. This section does not show for ID sets that do not have a **Last ID**.

③ Select Media: Select the type of module, **Copper** or **Fiber**, that you will use when you use this ID set. For **Fiber**, also select one or more fiber tests.

Notes

*You can use an ID set only for results from the media type you selected under **Select Media**.*

*The **Select Media** section does not show for ID sets that do not have a **Last ID**. You can use these ID sets for copper or fiber results.*

④ Tap **IMPORT** to use an ID set that you downloaded to the tester from LinkWare PC software.

⑤ Tap **REVIEW** to see the **CABLE ID REVIEW** screen, which shows the ID set an the total number of IDs. See "How to Make ID Sets" on page 578.

Note

*The **REVIEW** button is not available if you do not enter a **Last ID**.*

⑥ **SAVE**: To save the ID set, tap **SAVE**.

⑦ When you select **Fiber** media for tests that use a CertiFiber Pro or OptiFiber Pro module, select the tests that are necessary for each fiber in the ID set.

For example, you can specify that you must do a **Loss/Length** test and a **FiberInspector** test for each ID. After you do both tests for all the IDs in the set, the tester shows **100% Tested** on the home screen. If no IDs include FiberInspector results, the tester shows **50%**. To see the IDs that need FiberInspector results, select a **FiberInspector** test in the project, then look at the list under **FiberInspector IDs Untested** on the **CHANGE ID** screen (item ⑤ in Figure 209).

Note

*When you select a test in the **Fiber** section, be sure to add that test to the project. See "Set up Tests for the Project" on page 548.*



GPU01.EPS

Figure 209. CHANGE ID Screen for Tests on Copper and Single Fibers

Note

*The **CHANGE ID** screen for Smart Remote Mode shows the **Input Fiber ID** and **Output Fiber ID**. See Figure 123 on page 292.*

① **Auto Save**: When a test is completed, the tester automatically saves the results with the next ID from the ID set. If the test failed, you can do the test again for the same ID, or go to the next cable. If you go to the next cable, the tester shows the failed test at the top of the list of results for the ID set.

② **Next ID**: The **Next ID** is the ID that the tester gives to the next results you save.

- To edit the ID, tap the ID, use the keyboard to edit the ID, then tap **DONE**. If the ID is not in the current set, the tester will make a new ID set that uses the ID as the first ID.
- To select a different ID from the set of untested IDs, tap the ID in the set (④).

③ **End 1:**, **End 2**: When you select a fiber ID set for tests with an OptiFiber Pro OTDR module or for tests on single fibers with a CertiFiber Pro OLTS module, this panel shows the name for the ends of the fiber. The tester uses the names when you save results for each end of the fiber. To edit the name for the end shown, tap the panel. To change the end that is shown, tap the **End 1/End 2** control (item ⑨).

④ **IDs Untested**: The number of IDs that do not have results. For fiber IDs, the list shows the IDs that do not have results for the test shown (**Auto OTDR** in this example) and the **End** selected (item ⑨).

⑤ This list shows IDs that do not have results. For fiber IDs, the list shows the IDs that do not have results for the test shown and the **End** selected. On the home screen, the tester shows **100% Tested** when this list shows no IDs for all test types specified in the project.

When you use a **Next ID** set, which does not have a **Last ID**, the tester does not know how many IDs are necessary for the ID set. For **Next ID** sets, this list shows only the next ID.

⑥ Tap **CHANGE CABLE IDs** to select a different ID set to use or to edit an ID set.

⑦ Tap **DONE** to save your changes and go back to the previous screen.

⑧ Tap this bar or move your finger up or down the bar to scroll to a different place in the list.

⑨ **End 1/End 2** control: When you select a fiber ID set for tests with an OptiFiber Pro OTDR module or for tests on single fibers with a CertiFiber Pro OLTS module, this control lets you select an end of the fiber so you can enter a name for the end (item ③) and do tests from that end of the fiber.

Step 5: Give Names to the Ends of the Fiber for OTDR Tests

Names let you identify the location of the fiber ends when you do tests with an OTDR module. For example, **End 1** is in the telecommunications closet and **End 2** is in a work area.

5-1 On the home screen, if the test type panel does not show the **Auto OTDR** test, tap the panel, tap the **Auto OTDR** test, then tap **USE SELECTED**.

5-2 On the home screen, tap the **Next ID** panel, then on the **CHANGE ID** screen, tap the **End 1:** panel. See Figure 209.

5-3 On the **EDIT END NAME** screen, tap the field for **End 1**, then use the keyboard to enter a name for **End 1**.

5-4 Tap the field for **End 2**, use the keyboard to enter a name for End 2, then tap **DONE**.

5-5 On the **CHANGE ID** screen, make sure that the **End 1**/**End 2** control at the top of the screen shows the end where you will do the test (**End 1** for this tutorial).

Step 6: Turn on the Auto Save Function

When **Auto Save** is on, the tester automatically saves results with the next available ID. If a test fails, you can do the test again for the same ID if necessary, or do a test for the next ID.

6-1 On the **CHANGE ID** screen, make sure that the **Auto Save** control shows **On**.

6-2 Tap **DONE**.

Tutorial: How to Use a Project for Tests with a CableAnalyzer Module

This tutorial assumes that you completed the tutorial "Make a New Project" on page 544.

Figure 212 shows the minimum equipment necessary for this tutorial.

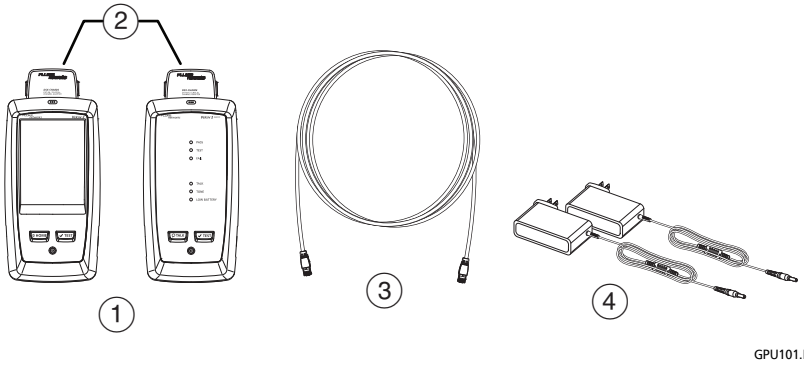

1. Main and remote testers with DSX CableAnalyzer modules installed
2. Two channel adapters
3. Twisted pair cable
4. AC adapters (optional)

Figure 210. Equipment for the Twisted Pair Project Tutorial

Step 1: Select a Project

If the correct project name does not show on the home screen, tap the **PROJECT** panel, tap **CHANGE PROJECT**, tap the name of a project, then tap **DONE**.

Step 2: Select a Test for Twisted Pair Cable

On the home screen, tap the test type panel, on the **CHANGE TEST** screen (Figure 211), tap the test you made for twisted pair cable, then tap **USE SELECTED**.

If the active ID set was not made for copper media, the tester shows a warning. When you tap **OK**, the tester shows the **CHANGE CABLE IDs** screen. Select the copper ID set that starts with B-00, which you made in the previous tutorial.



GPU54.EPS

Figure 211. CHANGE TEST Screen

① To select a test, tap the test.

② To add a test to the project, tap **NEW TEST**.

③ To edit a test, tap the test, then tap **EDIT**.

Note

Test limits are not applicable to the FaultMap test. Test limits and fiber types are not applicable to the FiberInspector test.

④ To do the selected test, tap **USE SELECTED**, then tap **TEST** or press ✔TEST.

Step 3: Do an Autotest

3-1 Attach the correct adapters to the main and remote testers.

3-2 Connect the testers to the cabling.

To do an Autotest without connections to installed cabling, connect the main and remote testers together with two channel adapters and twisted pair cable.

3-3 Tap **TEST** or press ✔TEST. When the test is completed and if it passed, the tester automatically saves the results with the first ID in the set (B-00 in this example).

Step 4: Monitor the Status of Your Project

The home screen shows **% Tested**, which is the percentage completed of the total number of tests you must do for the project.

For example, in this tutorial you set up IDs with 42 tests total:

- 10 fiber IDs with OTDR **End 1** and **End 2** and **Loss Length** tests in each ID, for a total of 30 fiber tests.
- 12 copper IDs (you can save one copper Autotest in each ID)
- Total tests: 42

If you did one Autotest on twisted pair for ID "B-00" as instructed by this tutorial, the **% Tested** shows **2%** (1 test completed out of 42 total for the project).

Tutorial: How to Use a Project for Tests with OptiFiber Pro and CertiFiber Pro Modules

This tutorial assumes that you completed the tutorial "Make a New Project" on page 544.

In this tutorial, you will do OTDR tests on both fibers of a duplex fiber link, then you will add loss/length results to the OTDR results for the two fibers.

Figures 212 and 213 show the equipment necessary for this tutorial.

Note

Select launch/tail cords and test reference cords that have the correct connectors to connect to the OptiFiber Pro and CertiFiber Pro modules and to the fiber link or segment.

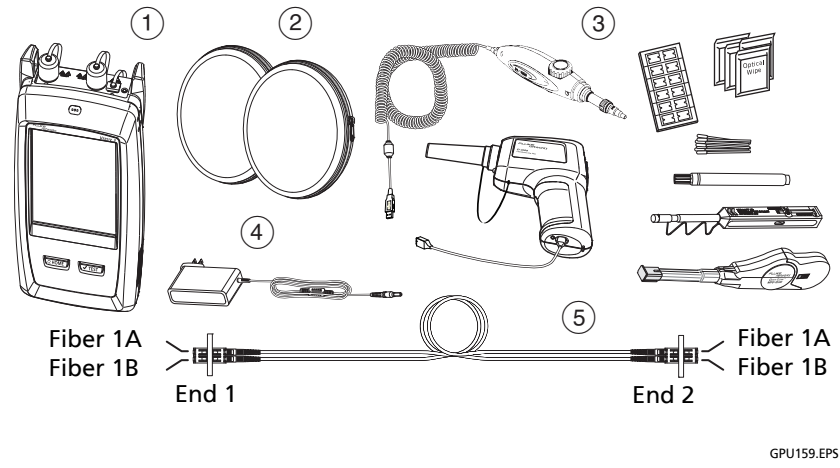

1. Main tester with OptiFiber Pro module installed
2. Launch and tail cords (match the fiber to be tested)
3. FI-1000 or FI-3000 video probe and fiber cleaning supplies
4. AC adapter (optional)
5. Duplex fiber link or segment

Figure 212. Equipment for the OTDR Project Tutorial

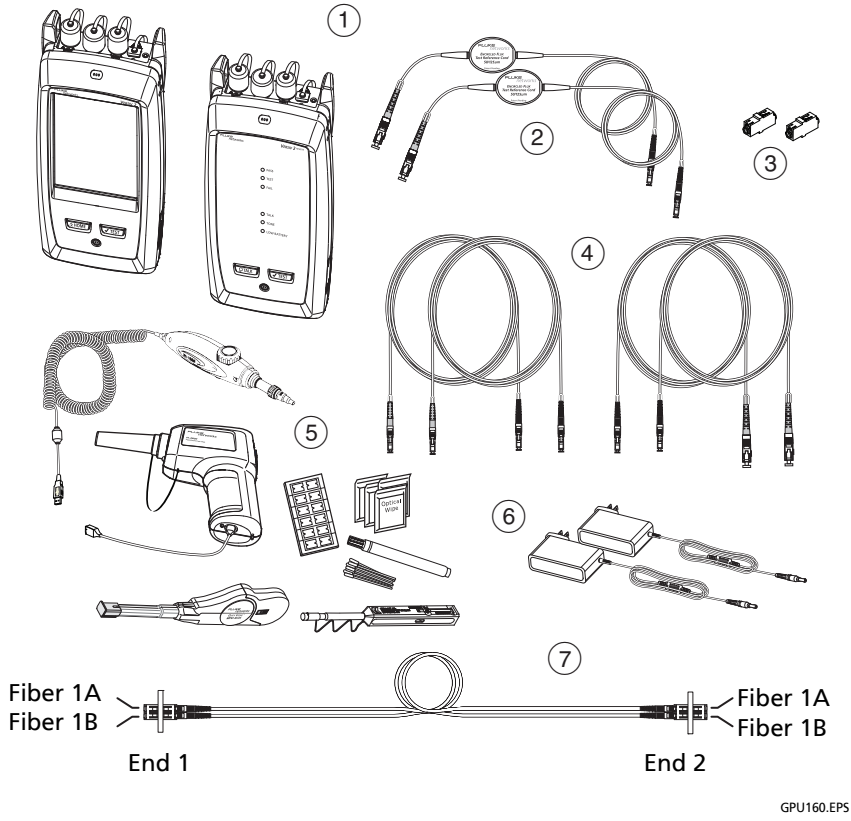

1. Main and remote testers with CertiFiber Pro modules installed
2. For multimode fiber: two EF-TRC test reference cords
3. Two single-mode adapters
4. For multimode fiber: two test reference cords. For single-mode fiber: four test reference cords.
5. FI-1000 or FI-3000 video probe and fiber cleaning supplies
6. AC adapters (optional)
7. Duplex fiber link or segment

Figure 213. Equipment for the Loss/Length Project Tutorial

Step 1: Select a Project

If the correct project name does not show on the home screen, tap the **PROJECT** panel, tap **CHANGE PROJECT**, tap the name of a project, then tap **DONE**.

Step 2: Select an OTDR Test

On the home screen, tap the test type panel, on the **CHANGE TEST** screen (Figure 211), tap the **Auto OTDR** test you made, then tap **USE SELECTED**.

If the active ID set was not made for fiber media, the tester shows a warning. When you tap **OK**, the tester shows the **CHANGE CABLE IDs** screen, where you can select the correct ID set.

Step 3: Select the Correct ID and Fiber End if Necessary

The **Next ID** panel on the home screen shows the ID and fiber end that the tester will use the next time you save results. If the panel does not show the **Next ID** as 1A and **End 1**, select those settings:

To select a different ID set or fiber end

Tap the **Next ID** panel.

- To select a different ID set, tap **CHANGE CABLE IDs**, tap the correct ID set, then tap **USE SELECTED**.
- To select a different fiber end, tap the **End 1**/**End 2** control at the top of the **CHANGE CABLE IDs** screen to make it show the correct end.

Step 4: Do OTDR Tests on End 1 of the Link

4-1 Clean and inspect all fiber connectors.

4-2 Connect the launch cord to the tester and to **End 1** of fiber 1A. Connect the tail cord to the other end of fiber 1A.

4-3 Tap **TEST** or press TEST. When the test is completed and if it passed, the tester automatically saves the results for **End 1** in ID 1A.

4-4 Connect the launch cord to the tester and to **End 1** of fiber 1B. Connect the tail cord to the other end of fiber 1B.

4-5 Tap **TEST** or press TEST. When the test is completed and if it passed, the tester automatically saves the results for **End 1** in ID 1B.

Step 5: Do OTDR Tests on End 2 of the Link

5-1 On the home screen, tap the **Next ID** panel.

5-2 On the **CHANGE ID** screen, tap the **End 1/End 2** control to make **End 2** show.

5-3 In the ID set under **IDs Untested**, the ID 1A is highlighted because it is the first ID in the set that does not contain OTDR results for **End 2**.

5-4 Tap **DONE**.

5-5 Clean and inspect all fiber connectors.

5-6 Connect the launch cord to the tester and to **End 2** of fiber 1A. Connect the tail cord to the other end of fiber 1A.

5-7 Tap **TEST** or press TEST. When the test is completed and if it passed, the tester automatically saves the results for **End 2** with the **End 1** results in ID 1A.

5-8 Connect the launch cord to the tester and to **End 2** of fiber 1B. Connect the tail cord to the other end of fiber 1B.

5-9 Tap **TEST** or press TEST. When the test is completed and if it passed, the tester automatically saves the results for **End 2** with the **End 1** results in ID 1B.

Step 6: Add Results from a Loss/Length Test

Select the loss/length test to do next on fibers 1A and 1B.

6-1 On the home screen, tap the test setup panel.

6-2 On the **CHANGE TEST** screen (Figure 211), tap the **Smart Remote** test, then tap **USE SELECTED**.

6-3 Attach CertiFiber Pro modules to the main and remote testers.

6-4 On the home screen, the **Next ID** panel shows the first two IDs, 1A and 1B, that do not contain loss/length results. To see how the tester uses the IDs for the fibers connected to its INPUT and OUTPUT ports, tap the panel.

6-5 Clean and inspect the connectors on the tester, remote, and test reference cords.

6-6 To set the reference for the fiber test and make sure your test reference cords are good, tap **SET REF**, tap **RUN WIZARD**, then do the steps given by the wizard.

Note

When you make connections to the fiber link, make sure you connect fiber 1A to the main tester's INPUT port and fiber 1B to the main tester's OUTPUT port.

6-7 When you have completed the reference and TRC verification procedures and connected the testers to the fiber link, tap **TEST** or press ✔TEST.

When the test is completed and if it passed, the tester automatically saves the results for the Smart Remote test with the OTDR results in IDs 1A and 1B. Figure 214 on page 569 shows the **RESULTS** screen for the tests completed for this project.

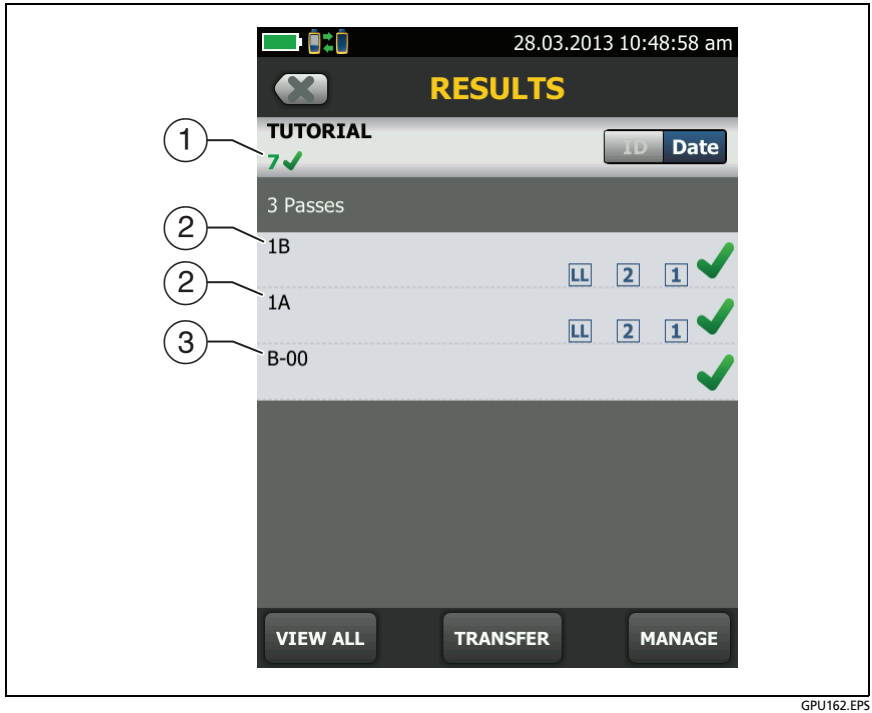

GPU162.EPS

Figure 214. Copper, OTDR, and Loss/Length Saved in a Project

① Total number of tests saved in the project.

② IDs1B and 1A each contain results from a loss/length test and from OTDR tests on Ends 1 and 2.

③ ID B-00 contains results from a twisted pair test.

Step 7: Monitor the Status of Your Project

The home screen shows **% Tested**, which is the percentage completed of the total number of tests you must do for the project.

In this tutorial you set up IDs for 42 tests total (see page 581), and have completed these tests:

- One Autotest on twisted pair for ID B-00
- Four OTDR tests: **End 1** and **End 2** for each fiber ID 1A and 1B
- Two Loss/length tests: one for each fiber ID 1A and 1B
- Total tests completed: 7
- **% Tested** on the home screen shows **17%** (7 tests completed out of 42 total for the project)

To see the IDs that do not have results for a test:

1. Tap the **Next ID** panel on the home screen.
2. If the tester is in **Smart Remote** mode, next tap the **Input Fiber ID** or **Output Fiber ID** window.

For a list of fiber IDs, the ID list under **IDs Untested** shows the IDs that do not have results for the **End** selected at the top of the screen and the **Test Type** shown.

For a list of copper IDs, the ID list shows the IDs that you have not used.

How to Change Settings as You Use a Project

Change the ID

Sometimes you must use an ID that is not the next ID in the set, an ID that is not in the ID set, or an ID you used before. You can change the ID on the **CHANGE ID** screen before you do a test or enter the ID on the **SAVE RESULT** screen after you do a test.

To use a different, unused ID from an ID set that has a first and last ID

If **Auto Save** is on or off:

1. On the home screen, tap the **Next ID** panel.
2. On the **CHANGE ID** screen, tap an ID in the list under **IDs Untested**, then tap **DONE**.
3. Do the test. After you save the results, the tester uses the next ID in the set for the next results.

If **Auto Save** is off:

1. Do the test, then tap **SAVE** if the test passed or **FIX LATER** if the test failed.
2. Enter the ID on the **SAVE RESULT** screen, then tap **SAVE**. After you save the results, the tester uses the next ID in the set for the next results.

To use an ID you used before

If the test failed before:

1 Turn on **Auto Save.**

2 Select the saved result on the **RESULTS** screen.

3 Tap **TEST AGAIN** or press ✔TEST. See "How to Make ID Sets" on page 578.

If the test passed before:

1 Do the test again.

2 Enter the ID on the **SAVE RESULT** screen.

To use an ID that is not in an ID set that has a first and last ID

If **Auto Save** is on or off:

1 On the home screen, tap the **Next ID** panel.

2 On the **CHANGE ID** screen, tap the panel that shows the **Next ID**.

3 Use the keyboard to enter an ID, then tap **DONE** on the keyboard.

The tester asks you if you want to create a new ID set (see "To Make ID Sets with International Characters" on page 581).

4 Tap **YES** in the dialog box, then tap **DONE**.

5 Do a test.

The tester saves the results with the ID you entered. It saves subsequent results with the IDs from the new set.

To use IDs from the set you used before, go to the **CHANGE ID** screen, tap **CHANGE CABLE IDs**, tap the ID set, then tap **USE SELECTED**.

If **Auto Save** is off:

1 Do the test.

2 Then tap **SAVE** if the test passed or **FIX LATER** if the test failed.

3 Enter an ID on the **SAVE RESULT** screen, then tap **SAVE**.

The tester saves the result with the ID you entered. The next ID the tester uses is the next ID from the set.

If the ID you used is in another set in the project, the tester removes that ID from the **IDs Untested** list for the same type of test.

If the ID you used is not in any set in the project, and the project contains one or more sets that have first and last IDs, the **% Tested** value includes test you saved with the ID. For example, if you have one set with 10 IDs, and you save 1 result with an ID that is not on the set, the **% Tested** shows 9% (1 saved result divided by 11 IDs).

To change the ID when the set has only a next ID

You can change the ID on the **CHANGE ID** screen before you do the test. Or, you can turn off **Auto Save**, then enter an ID on the **SAVE RESULT** screen after you do the test. For both methods, the tester changes the set to use the ID you entered as the **Next ID**.

To Change the Tests in a Project

When you use a project, you usually do only the tests that the project specifies. You select these tests from the list on the **CHANGE TEST** screen in the project.

If necessary, you can add a test to the project or change the settings for a test in the project.

To select a different test in the project

1. On the home screen, tap the test setup panel.
2. On the **CHANGE TEST** screen tap the test you want to do. See Figure 211 on page 561.
3. Tap **USE SELECTED**.

To add a test to a project

1. On the home screen, tap the test setup panel or the **PROJECT** panel.
2. Tap **NEW TEST**.
3. On the **TEST TYPE** screen, tap a test.
4. On the **TEST SETUP** screen, change the test settings as necessary, then tap **SAVE**.

To include a fiber test in the % Tested value

If you add an OptiFiber Pro OTDR, CertiFiber Pro loss length, FiberInspector, or FaultMap test to a project, but do not select the test on the **CABLE ID SETUP**, **EDIT CABLE IDs**, or **IMPORTED IDs** screen, the results you save for the test do not affect the **% Tested** value.To include a test in the % Tested value

1. On the home screen, tap the **PROJECT** panel, then on the **PROJECT** screen, tap a fiber ID set that has a **First** and **Last ID**.
2. On the **EDIT CABLE IDs** screen, or the **IMPORTED IDs** screen (for ID sets downloaded from LinkWare PC or LinkWare Live), select the test under **Select Fiber Tests**.
3. Tap **SAVE**, then tap **DONE**, or for **IMPORTED IDs**, tap **DONE** then tap **DONE** again.

To Change the Project

To save results in a different or new project

1. Press home.
2. Tap the project panel.
3. Tap **CHANGE PROJECT**.

   The CHANGE PROJECT screen shows on the display.
4. Select a different project, or tap **NEW PROJECT** to start a new project. See Figure 215 on page 576.

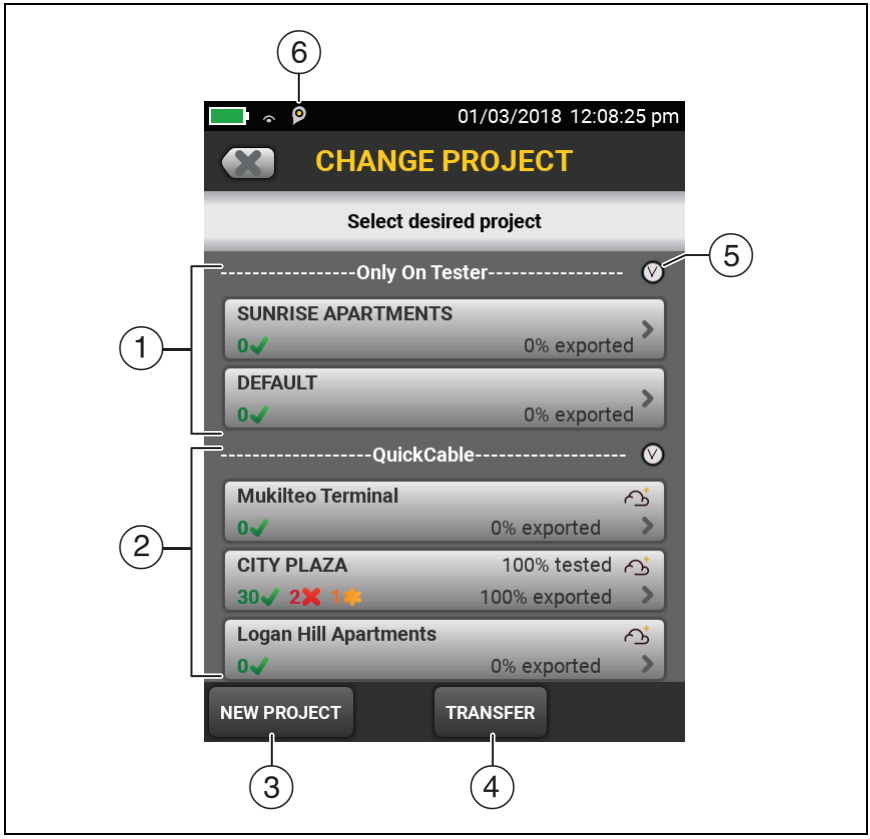

GPU210.EPS

Figure 215. The CHANGE PROJECT Screen

① These projects are only on the tester. They have not been synced to LinkWare Live. The **% exported** value shows the percentage of the results that has been exported to a USB flash drive.

② These projects have been synced to the LinkWare Live organization shown ("QuickCable" in this example). The **% exported** value shows the percentage of the results that has been exported to LinkWare Live.

 The cloud and "+" icon shows that the project is on the tester and in LinkWare Live.

Note

*When the tester is signed in to LinkWare Live, this screen does not show projects that are only in LinkWare Live. To see those projects, tap **TRANSFER,** then tap the **LinkWare Live** panel.*

③ Tap **NEW PROJECT** to create a new project.

④ **TRANSFER** lets you sync projects with LinkWare Live, export or import results to or from a flash drive, and delete results on the flash drive. The **TRANSFER** function also lets you sync project setups and results with LinkWare Live.

⑤ Tap  to collapse or expand the list of projects.

Projects downloaded from LinkWare Live can include subprojects. On the tester, subproject names show with the project name: **Project Name>>Subproject Name**.

LinkWare Live will not use subproject names you create on the tester. If you use the format "**Project Name>>Subproject Name**" to enter names on the tester, then sync the project to LinkWare Live, LinkWare Live will use both names as the project name.

⑥  The asset management icon shows when the owner of a LinkWare Live account has enabled the asset management service for the tester. See "About the Asset Management Service" on page 593.

How to Make ID Sets

There are three methods you can use to make ID sets:

- Make sets of sequential IDs on the tester.
- Make sets of sequential IDs in LinkWare PC or LinkWare Live Professional software, download them to the tester, then import them into a project on the tester. See “Import an ID Set into a Project”. These sets can include non-sequential IDs.
- Make an ID set in a LinkWare Live project, then sync the project to the tester. See the help in LinkWare Live for details.

To make a set of sequential IDs, you enter the first and last ID in the set. The tester (or LinkWare software) increments the letters and numbers in the first ID from right to left to make a set of IDs that starts with your first ID and ends with your last ID. Special characters, letters with accents, and letters that are the same in the first and last IDs do not increment.

For example, here is an installation with eight fibers:

- Two rooms: rooms 17 and 18
- Two fiber cables in each room: cables 1 and 2
- Two fibers in each cable: fibers A and B

You can make this ID set for the installation:

First ID: ROOM 17 FIBER 1A

Last ID: ROOM 18 FIBER 2B

These IDs make this set of eight IDs:

ROOM 17 FIBER 1A

ROOM 17 FIBER 1B

ROOM 17 FIBER 2A

ROOM 17 FIBER 2B

ROOM 18 FIBER 1A

ROOM 18 FIBER 1B

ROOM 18 FIBER 2A

ROOM 18 FIBER 2B

Each project can have up to 5000 IDs. If an ID set does not have a **Last ID**, the tester counts the set as one ID. An ID can have a maximum of 60 characters.

To make an ID set

Note

When you make an ID set, the tester saves it in the project shown on the home screen.

1 On the home screen, tap the **PROJECT** panel.

2 On the **PROJECT** screen, tap **NEW ID SET**.

3 On the **CABLE ID SETUP** screen, tap the **First ID** panel, then use the keyboard to enter the first ID for the set.

4 Tap the **Last ID** panel, use the keyboard to enter the last ID for the set, then tap **DONE**.

Note

*If you do not enter a **Last ID**, the tester uses the first ID as the **Next ID** and increments that ID each time you save a result. To use international characters,* *See "To Make ID Sets with International Characters" on page 581.*

5 To use the IDs for fiber tests, tap **Fiber** under **Select Media**, then select the necessary tests.

6 To see the ID set, tap **REVIEW**.

7 On the **CABLE ID REVIEW** screen or the **CABLE ID SETUP** screen, tap **Save**.

If an ID Sequence is Invalid

If an ID sequence is invalid, use these rules for valid sequences to find the problem:

- The **First** and **Last** IDs must have the same numbers of characters. For example you cannot use 1 as the **First ID** and 999 as the **Last ID**. A valid sequence is 001 to 999.
- An ID set cannot contain an ID used in another set.
- The types of characters in each position must agree between the **First** and **Last** IDs. For example:
  - You cannot use the letter "O" in the **First ID** and the number "0" in the same position in the **Last ID**.
  - You cannot use "a" in the **First ID** and "D" in the same position in the **Last ID**. Both letters must be upper-case or lower-case.
- Do not use the characters / # * - . , : [ ], a space, or accented characters as characters to increment. You can use these characters in IDs, but they must be the same characters in the **First** and **Last** IDs.
- Characters in the **First ID** cannot be higher in their sequence than the related character in the **Last ID**. For example, you cannot use 2C as the **First ID** and 5A as the **Last ID**.
- IDs cannot have more than 60 characters.

To Make ID Sets with International Characters

To make ID sets with international characters, use the ID list utility in LinkWare Live to create the list, export the list to the tester, then import the list into a project on the tester.

In the LinkWare Live ID list utility, international characters will increment, so you can use them for sequential characters in your IDs.

About Next ID Sets

Next ID sets have one ID that the tester increments each time you do a test. To make a **Next ID** set, do not enter a **Last ID** when you make an ID set.

- Numbers increment sequentially:

  1, 2, 3, 4, 5, 6, 7, 8, 9, 10, 11, 12, ... 99, 100, 101...

- Letters increment through the English alphabet:

  A, B, C, D, ... Z, AA, AB, AC, AD, ... AZ, BA, BB, BC...

- Numbers and letters do not cause each other to increment:

  1Y, 1Z, 1AA, 1AB, ... 1ZZ, 1AAA, 1AAB...

- The tester does not increment symbols or accented characters.

When you use a **Next ID** set, the set under **IDs Untested** on the **CHANGE ID** screen shows only the next ID. To save the next test with a different ID, tap the **Next ID:** panel, then enter a different ID.

Each project can have one **Next ID** set. You can use the **Next ID** set for copper or fiber results.

If your project has only a **Next ID** set, the tester cannot calculate the percentage of the project that is completed, so the **% Tested** value does not show on the home screen.

If your project has both a **Next ID** set and sets with first and last IDs, the **% Tested** value includes tests you saved with **Next ID**. For example, if you have one **Next ID** set and one set with 10 IDs, and you save 10 results with next IDs, the **% Tested** shows 50% (10 saved results divided by 20 IDs).

Import an ID Set into a Project

You can use LinkWare PC software to make ID sets, download them to the tester, then import them into projects.

Note

ID sets that you download to the tester must have the extension ".ids".

To import an ID set

1. In LinkWare PC, select **Utilities** > (module name) > **Create ID List** to make an ID set and download it to the tester.
2. On the home screen, tap the **PROJECT** panel.
3. Make sure the correct project shows on the **PROJECT** screen. If necessary, tap **CHANGE PROJECT** to select a different project.
4. On the **PROJECT** screen tap **NEW ID SET**, then tap **IMPORT**.
5. On the **IMPORT CABLE ID** screen, tap the ID set you downloaded.

6 Under **Select Media**, tap **Copper** or **Fiber** to specify the type of tests that will use the IDs.

For IDs for fiber tests: Under **Fiber**, select the tests that are necessary for the project. These selections let you use the **% Tested** value on the home screen to monitor the progress of the project.

7 Tap **IMPORT**.

Delete an Imported ID Set

If you go to the **PROJECT** screen and delete a cable ID set that you imported into the project, the ID set is still available in the tester.

To delete an imported ID set from the tester

1 In LinkWare PC, select **Utilities** > (module name) > **Create ID List**.

2 In the **Custom ID List** dialog, click the **Delete List On Tester** icon, select a list, then click **OK**.

How to Manage Projects

Note

To manage projects in the cloud, use the LinkWare Live web application. See Chapter 18.

View Results in a Project

On the home screen, tap the **RESULTS** icon. To see the results from a different project, tap **VIEW ALL**, then tap a project name. For more information on results, see Chapter 16.

Rename a Project

1. On the home screen, tap the **PROJECT** panel, tap **MANAGE**, then tap **Rename**.
2. Use the keyboard to edit the name, then tap **DONE**.

Note

*You cannot rename the **DEFAULT** project.*

Copy a Project to Make a New Project

You can copy any project for any module and change the settings to make a new project for any module. It is not necessary to install the module to edit a project that uses the module. When you copy a project, the new project does not contain the test results from the project you copied.

To copy a project

1. On the home screen, tap the **PROJECT** panel, tap **MANAGE**, then tap **Copy**.
2. Use the keyboard to enter a name for the project, then tap **DONE**.

Delete a Project

1. On the home screen, tap the **PROJECT** panel.

2 Make sure the project you want to delete is the active project. If it is not, tap **CHANGE PROJECT**, then select the project you want to delete.

3 On the **PROJECT** screen, tap **MANAGE**, then tap **Delete**. The tester shows a warning if you have not uploaded all of the results to a PC. Tap **DELETE** to delete the project.

Note

*You cannot delete the **DEFAULT** project.*

Manage Projects on a Flash Drive

You can export or import projects to or from a flash drive, and delete projects on the flash drive. The project data includes all project settings, test results, and ID sets.

⚠Caution

- **Do not remove the USB flash drive while the LED on the drive flashes. Doing so can corrupt the data on the drive.**
- **You can lose a USB flash drive, cause damage to it, or accidentally erase the contents of the drive. Thus, Fluke Networks recommends that you save no more than one day of test results on a flash drive.**

Note

The tester reads only USB drives that use the FAT format.

1 Connect a USB flash drive to the type A USB port. The tester makes a bell sound when it detects the drive.

2 On the home screen, tap the **PROJECT** panel.

3 On the **PROJECT** screen, tap **TRANSFER**.

4 On the **TRANSFER PROJECTS** screen, select a function:

- **Export**: On the **EXPORT PROJECTS** screen, select the projects you want to export to the flash drive, then tap **EXPORT**.
- **Import**: On the **IMPORT PROJECTS** screen select the projects you want to import from the flash drive, then tap **IMPORT**.
- **Delete**: On the **DELETE PROJECTS** screen select the projects you want to delete on the flash drive, then tap **DELETE**.

Copy Project Settings to Other Testers

To copy the settings in a project to other testers, use the **Read Project Setups** and **Write Project Setups** utilities in LinkWare PC software. You can use LinkWare PC to read project settings from a tester or from a project you exported to a flash drive.

About LinkWare Live

The LinkWare Live web application lets you manage your results and projects from a desktop or mobile device. To get started with LinkWare Live, see Chapter 18 or go to **www.linkwarelive.com/signin**.

Chapter 18: Sync Projects with LinkWare™ Live

The LinkWare Live web application lets you manage your projects from a desktop or mobile device.

Note

To make sure you can use the latest features in LinkWare Live, keep your tester updated with the latest Versiv software.

Sign Up for a LinkWare Live Account

1. Go to **www.linkwarelive.com/signin**.
2. If you already have a LinkWare Live account, enter the email address and password on the LinkWare Live **Sign In** page.
3. If you do not have a LinkWare Live account, click **New user? Sign up Now!**. Enter the information for your account, then click **CREATE ACCOUNT**.

   Fluke Networks sends you an email with a LinkWare Live activation code.
4. Open the email, copy the activation code, click the LinkWare Live activation link in the email, paste the activation code into the box in the activation window, then click **ACTIVATE**.
5. The LinkWare Live **Sign In** page shows again. Enter your email address and password, then click **SIGN IN**.

How to See the Tester's MAC Address

Some networks require users to register their device's MAC address before they can connect to the network.

There are two MAC addresses: one for the wired port and one for the Wi-Fi port.

Versiv 2 testers have an internal Wi-Fi radio. Versiv testers use an external adapter to connect to Wi-Fi networks.

To see the tester's MAC address

1. For a Versiv that uses an external Wi-Fi adapter, connect the adapter to the tester's USB port.
2. On the home screen tap **TOOLS**, then tap **Network**.
3. On the **NETWORK** screen, tap the **Wired** or **Wi-Fi panel**. The MAC addresses shows at the top of the **WIRED** and **WI-FI PORT** screens.

Use LinkWare Live Through a Wired Ethernet Network

1. Use an appropriate cable to connect the tester's RJ45 Ethernet port to an active network port. If the cable is good and the port is active, the LEDs on the tester's port will come on.
2. On the home screen, make sure the **Operator** name is correct. The tester uses the email address associated with the operator name as the ID when you sign in to LinkWare Live.

   If no address is associated with the name, or if you enter a different address on the **LWL SIGN IN** screen, the tester associates the name with the address you enter.
3. On the home screen, tap **SYNC**.
4. When the tester connects to the network, the wired network connection icon shows at the top of the screen: 

5 On the **LWL SIGN IN** screen, enter the ID and password for your LinkWare Live account, then tap **SIGN IN**.

6 If you use other people's LinkWare Live accounts, the **ORGANIZATION** screen shows. Tap the organization you want to use.

7 On the **SYNC PROJECTS** screen (Figure 216 on page 591), select the projects you want to sync, then tap **SYNC**.

Use LinkWare Live Through a Wi-Fi Network

Note

The testers in some custom kits do not support Wi-Fi (for example, in some kits purchased for government applications). These testers do not show any Wi-Fi settings.

Versiv 2 testers have an internal Wi-Fi radio. These testers do not need an external adapter to connect to Wi-Fi networks.

To connect a Versiv tester to a Wi-Fi network, you must have an optional USB Wi-Fi adapter. Fluke Networks recommends these adapters:

- TP-LINK TL-WN725N, versions 1 and 2 (recommended)
- NETGEAR WNA1000M

Other adapters may be suitable. For the latest list of qualified adapters, see this topic in the Fluke Networks Knowledge Base:

www.bit.ly/1ACJeFO

To use a Wi-Fi network

1 For a Versiv tester that uses an external Wi-Fi adapter, connect the adapter to the tester's USB port.

2 On the home screen, make sure the **Operator** name is correct. The tester uses the email address associated with the operator name as the ID when you sign in to LinkWare Live.

If no address is associated with the name, or if you enter a different address on the **LWL SIGN IN** screen, the tester associates the name with the address you enter.

3 On the home screen, tap **SYNC**.

4 Select a wireless network if necessary.

- **If a notice about additional information shows**

  Tap **OK**, then enter the required credentials on the **REDIRECTED LOGIN** screen and log in. If another **REDIRECTED LOGIN** screen shows after you log in, tap **DONE** on that screen.

- **If the NETWORK screen shows**

  The network settings are not correct. To change the settings:

  a. Tap the **Wi-Fi** panel, then change the settings as necessary. Table 21 on page 596 describes the Wi-Fi settings.

  b. To test the settings, go back to the **WI-FI PORT** screen, then tap **CONNECT**.

  When the tester connects to the network, the Wi-Fi network connection icon shows at the top of the screen:

  c. On the home screen, tap **SYNC**.

5 On the **LWL SIGN IN** screen, enter the ID and password for your LinkWare Live account, then tap **SIGN IN**.

6 If you use other people's LinkWare Live accounts, the **ORGANIZATION** screen shows. Tap the organization you want to use.

7 On the **SYNC PROJECTS** screen (Figure 216), select the projects you want to sync, then tap **SYNC**.

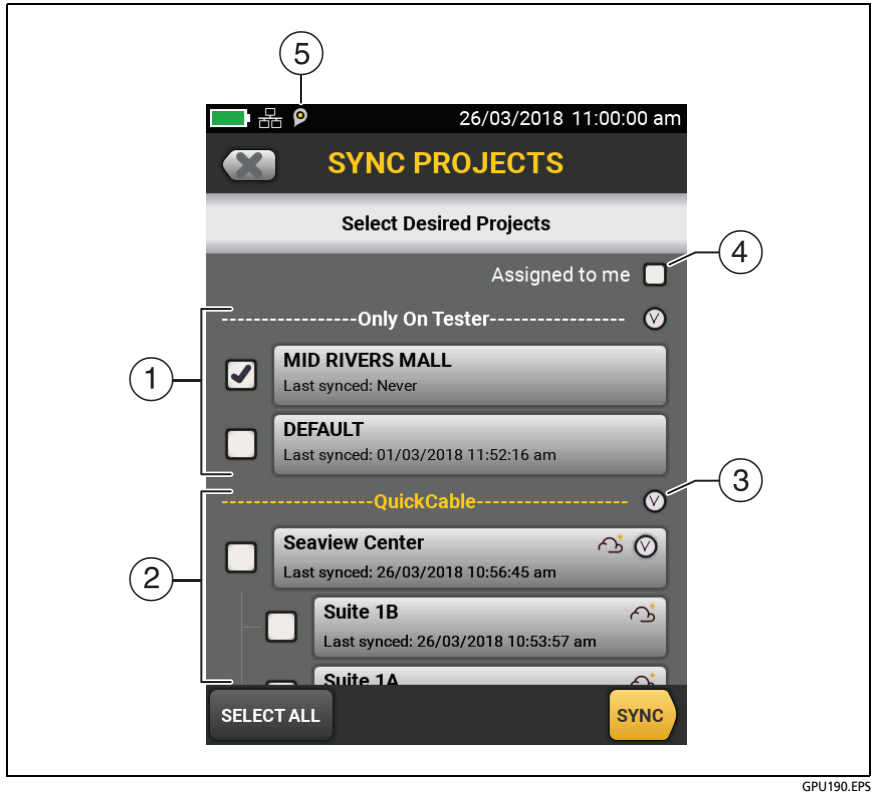

GPU190.EPS

Figure 216. SYNC PROJECTS Screen

① These projects are only on the tester. They have not been synced to LinkWare Live.

By default, the active project is selected to sync.

② These projects and subprojects are in the LinkWare Live organization shown ("QuickCable Inc." in this example).

To update the list without syncing projects, tap , then tap the **LinkWare Live** panel again.

 The cloud icon shows that the project is only in LinkWare Live and has not been synced to the tester.

 The cloud and "+" icon shows that the project in LinkWare Live has been synced to the tester, so you can use the project on the tester.

Note

*If you rename a synced project on the tester or in LinkWare Live, and the project has the **Active** status in LinkWare Live, the **SYNC PROJECTS** screen on the tester shows both names in the format **Project Name on Tester -> Project Name in LinkWare Live**. After you sync, the project's name on the tester changes to the name used in LinkWare Live.*

③ Tap  to collapse or expand the list of projects or subprojects.

④ If you select **Assigned to me**, you will see only projects that are assigned to you in the project settings in LinkWare Live.

⑤  The asset management icon shows when the owner of a LinkWare Live account has enabled the asset management service for the tester. See "Sign Your Tester Out of LinkWare Live" on page 597.

When You Cannot Sync a Deleted Project

When you delete a project in LinkWare Live, it goes into the recycle bin. If you synced the project before it was deleted, then try to sync it again, the tester shows a message to tell you that you cannot sync a deleted project. You will see this message even if you rename the project on the tester because LinkWare Live gives each project a unique, hidden ID that never changes, and uses this ID to identify projects. If it is necessary to sync the project, go to the LinkWare Live recycle bin and restore the project.

If a project in the LinkWare Live recycle bin has never been synced, and you create a project with the same name on the tester then sync the project, LinkWare Live shows it as a new, active project and gives it a unique ID.

About the Asset Management Service

LinkWare Live's asset management service lets you see the locations of your testers in the field. The owner of the LinkWare Live account can enable or disable the service remotely for each tester.

When this service is enabled on a tester, the asset management icon () shows on the tester's home screen. When a technician uses the tester to sign in to LinkWare Live, the tester's location shows on a map on LinkWare Live's **ASSETS** page.

Note

You can enable or disable the asset management service only with LinkWare Live. There is no setting on the tester that enables or disables this service.

Change the Network Settings

It is not usually necessary to change the wired or Wi-Fi network settings before you try to make a connection. But for example if you must use static addressing, you can get to the settings on the **NETWORK** screen.

To get to the network settings

On the home screen, tap **TOOLS**, then tap **Network**, then tap the **Wired** or **Wi-Fi panel**.

To test the settings

Tap **CONNECT** on the **WI-FI PORT** or **WIRED PORT** screen.

Settings for the Wired Port

The tester can use **DHCP** (dynamic host configuration protocol) or **Static** for the address method. Most networks use **DHCP**.

For **Static**, enter an IP address for the tester and the **Subnet Mask**, **Gateway** address, and **DNS1** and **DNS2** addresses for the network. If you are not sure what to enter, speak to the network administrator.

Wi-Fi Settings

Table 21 shows the Wi-Fi settings.

Note

The testers in some custom kits do not support Wi-Fi (for example, in some kits purchased for government applications). These testers do not show any Wi-Fi settings.

How to Add a Wi-Fi Access Point

If an access point has a hidden SSID, you can add the SSID to the list of access points.

1. On the home screen, tap **TOOLS**, then tap **Network**, then tap the **Wi-Fi panel**.
2. On the **WI-FI PORT** screen, tap the **Wi-Fi Network** panel.

   The tester shows a list of the available wireless access points.
3. On the **WI-FI NETWORKS** screen, tap **ADD NETWORK**.
4. Enter the access point's SSID, then tap **DONE**.
5. On the **WI-FI PORT** screen, enter settings for the access point, then tap **CONNECT**.

Delete Wi-Fi Settings and Passwords

The tester saves the security settings and passwords for the Wi-Fi connections you use.

To delete all Wi-Fi settings and passwords

On the home screen, tap **TOOLS**, tap **Network**, tap the **Wi-Fi** panel, then tap **FORGET ALL**.

Regulatory Information for the Versiv 2 Wi-Fi Radio

To see the regulatory information

On the home screen, tap **TOOLS**, then tap **Regulatory Information**.

Table 21. Settings for the Wi-Fi Connection

Setting	Description
Address	Most networks use **DHCP**.
DHCP address settings	**SSID**: The tester does a scan for wireless networks and shows a list of available networks. Select the correct SSID. To connect to a hidden network, tap **ADD SSID**. **Security:** • **Authentication**: Select the authentication type that the network uses: • **Open**: Security credentials are not necessary. • **WEP**: Select an encryption method and enter the necessary keys. • **WPA/WPA2 Personal**: Enter the password for the network. • **WPA/WPA2 Enterprise**: ⬩ **EAP**: Select an EAP type that is appropriate for the authentication server. ⬩ User and Password: Enter a user name (login name) and password for the network. ⬩ Alternate ID: The tester can use the **Alternate ID** with some EAP methods to send an empty or anonymous identity while the tester makes a private connection. The tester then uses the private connection to send the **User** name and **Password** you entered. The tester can also use the **Alternate ID** to send the **User** name and **Password** to an authentication server in a different realm. In this situation, the **Alternate ID** can have a format such as anonymous@MyCompany.com or / MyCompany/anonymous.
Static address settings	Enter an IP address for the tester and the **Subnet Mask**, **Gateway** address, and **DNS1** and **DNS2** addresses for the network. If you are not sure what to enter, speak to the network administrator. The **Security** settings are the same as for the **DHCP** address settings.

Sign Your Tester Out of LinkWare Live

1. On the home screen, tap the **TOOLS** icon, then tap **Sign In**.
2. On the **LWL SIGN IN** screen, tap **SIGN OUT**, or turn off the tester.

Sign In to LinkWare Live from a Desktop or Mobile Device

1. Go to **https://www.linkwarelive.com/signin**.
2. Enter your LinkWare Live user name and password, then click **SIGN IN**.

For more information about how to use LinkWare Live, click **HELP** on the LinkWare Live web page.

Import Projects from LinkWare Live into LinkWare PC

1. Install the latest version of LinkWare PC software on the PC.
2. Turn on the tester and start LinkWare PC.
3. On the LinkWare PC toolbar, click .
4. Sign in to LinkWare Live, then use the LinkWare PC dialog boxes to select and import projects.

For More Information on LinkWare Live

For more information on LinkWare Live, see the LinkWare Live product page on the Fluke Networks website.

Chapter 19: Custom Media and Test Limits

Make a Custom Copper Cable Type

If a twisted pair or coaxial cable installation has a cable type that is not in the list of types in the tester, you can make a custom cable type for the job. A custom cable type has these settings:

- Custom cable name
- Standard cable type used for default values
- NVP (nominal velocity of propagation)

You can make up to 20 custom cable types. The tester keeps custom cable types with the other cable types in the main tester (not in the module). The names of custom cable types have an asterisk (*) at the start and end.

Use the values specified by the cable manufacturer to make the custom cable type.

To make a custom cable type

1 On the home screen, tap the test setup panel.

2 On the **CHANGE TEST** screen, tap a copper test, then tap **EDIT**.

Note

You must select a test before you make a custom cable type, but you can use the cable type in any test that supports the category of the cable.

3 On the **TEST SETUP** screen, tap **Cable Type**, tap **MORE**, tap **Custom**, then tap **MANAGE**.

4 On the **MANAGE CUSTOM** screen, tap the **Create** panel.

5 On the **NEW CUSTOM CABLE** screen, tap **Enter New Cable Name**, use the keyboard to enter a name, then tap **DONE**.

6 On the **NEW CUSTOM CABLE** screen, tap the panel under **Use default values from:**, then select a cable type to use for default values for your custom cable.

7 On the **NEW CUSTOM CABLE** screen, tap the **NVP** panel to change the NVP value if necessary. See the next section for instructions.

8 When you have entered all necessary values, tap **SAVE** on the **NEW CUSTOM CABLE** screen. The tester adds an asterisk (*) to the start and end of the custom cable name.

9 To use the custom cable type, tap it on the **CABLE TYPE** screen.

Change the NVP

The tester uses an NVP value (nominal velocity of propagation) and the signal delay through a cable to calculate the length of copper cabling.

The default value specified by the selected cable type is the typical NVP for that cable type. The default value is usually accurate enough for cable certification tests. To increase the accuracy of length measurements you can adjust the NVP to a specified or actual value.

Note

NVP values can be different among cable types, lots, and manufacturers. Usually, these differences are not large enough to change the PASS/FAIL result of the length test.

Set the NVP to a Specified Value

Use this procedure to set the NVP to a specified value, such as the value specified by the manufacturer. The NVP value applies to the selected cable type.

Note

*If you are on the **NEW CUSTOM CABLE** screen, tap the **NVP** panel, then go to step 4 below.*

To enter a specified NVP value

1. On the home screen, tap the test setup panel, tap a copper test, then tap **EDIT**.
2. On the **TEST SETUP** screen, make sure that the **Cable Type** is correct.
3. Under the **Cable Type**, tap **NVP**.
4. On the **NVP** screen, use  or  to change the NVP value.
5. Tap **DONE**, then tap **SAVE**.

Find a Cable's Actual NVP

To find a cable's actual NVP, you can use the **NVP** screen to adjust the measured length to match a known length of cable. The NVP value applies to the selected cable type.

To find a cable's NVP

Note

*If you are on the **NEW CUSTOM CABLE** screen, tap the **NVP** panel, then go to step 4 below.*

1. On the home screen, tap the test setup panel, tap a copper test, then tap **EDIT**.
2. On the **TEST SETUP** screen, make sure that the **Cable Type** is correct.

3 Under the **Cable Type**, tap **NVP**.

4 Attach a channel adapter to the tester.

5 Connect a known length of twisted pair cable to the tester. The cable must be a minimum of 30 m (100 ft) long.

6 Tap **MEASURE**.

7 On the **NVP** screen, use  or  to change the NVP value until the measured length is the length of the cable, then tap **SAVE**.

Reset the NVP to the Default Value

To reset the NVP to the default value defined by the selected cable type, select the cable type again on the **TEST SETUP** screen.

Make a Custom Outlet Configuration

Custom outlet configurations start with the T568A or T568B configurations. You can enable or disable each pair, and give the configuration a name.

To make a custom outlet configuration

1 On the home screen, tap the test setup panel, tap a copper test, then tap **EDIT**.

2 On the **TEST SETUP** screen, tap **Outlet Configuration**.

3 Tap **CUSTOM**, then tap **MANAGE**, then tap the **Create** panel.

4 Select the **T568A** or **T568B** configuration then select the pairs you want enabled.

5 Enter a name for the configuration, then tap **SAVE**. The tester adds an asterisk (*) to the start and end of the custom configuration name.

6 To use the configuration, tap it on the **OUTLET CONFIG** screen, then tap **USE SELECTED**.

Note

*When you disable pairs, the overall test result can be **PASS** when some enabled pairs do not comply with the selected test limit. For example, if you disable pair 4,5, the NEXT test results will not show how crosstalk from the other pairs would affect pair 4,5. Thus, other pairs could possibly not be fully compliant with the test limit.*

Make a Custom Fiber Type

If a fiber installation has a fiber type that is not in the list of types in the tester, you can make a custom fiber type for the job. A custom fiber type has these settings:

- Custom fiber name
- Category of fiber (OM categories for multimode, OS categories for single-mode)
- IOR (index of refraction)
- Backscatter value for fiber types for OTDR tests

Use the values specified by the fiber manufacturer to make the custom fiber type.

You can make up to 20 custom fiber types. The tester keeps custom fiber types with the other fiber types in the main tester (not in the module). The names of custom fiber types have an asterisk (*) at the start and end.

To make a custom fiber type

1 On the home screen, tap the test setup panel.

2 On the **CHANGE TEST** screen, tap an OLTS or OTDR fiber test, then tap **EDIT**.

Note

You must select a test before you make a custom fiber type, but you can use the fiber type in any test that supports the category of the fiber.

3 On the **TEST SETUP** screen, tap **Fiber Type**, tap **MORE**, tap **Custom**, then tap **MANAGE**.

4 On the **MANAGE CUSTOM** screen, tap the **Create** panel.

5 On the **NEW CUSTOM FIBER** screen, tap **Enter New Fiber Name**, use the keyboard to enter a name, then tap **DONE**.

6 Select a **Category** for the fiber.

7 For each wavelength, tap the panels for the available settings, then enter values for the settings. Table 22 gives descriptions of the settings.

The default settings are typical values for the category of fiber you selected.

8 When you have entered all necessary values, tap **SAVE** on the **NEW CUSTOM FIBER** screen. The tester adds an asterisk (*) to the start and end of the custom fiber name.

Table 22. Settings for Custom Fiber Types

Setting	Description
Name	Enter a name for the custom fiber type.
Category	The category specifies the level of performance of the fiber, such as the fiber's attenuation and bandwidth. Select the category that is applicable to your custom fiber type. OS: Categories for single-mode fibers OM: Categories for multimode fibers
IOR (Index of refraction)	The tester uses the index of refraction to calculate the optical length of the fiber. Optical length usually differs slightly from the length of the fiber jacket. This occurs because fibers are often curved inside their jackets and because there are small variations in the IOR of the fibers. Each fiber type includes a default value, which is the IOR specified by the manufacturer. When you increase the **IOR** value, the calculated length decreases. The tester accepts **IOR** values between 1.000 and 1.700. Enter the value specified by the fiber manufacturer. If you are not sure of the value, and the accuracy of length measurements is not very important, use the default value. See "About the Index of Refraction" on page 606.
Backscatter (fibers for OTDR tests only)	The backscatter coefficient is a measurement of the quantity of light that the fiber reflects back to the OTDR when the OTDR uses a 1 ns pulse. The tester uses this value to calculate the reflectance of events for OTDR tests and the overall ORL for the link. Each fiber type includes a default value, which is the backscatter coefficient specified by the manufacturer. Enter the value specified by the fiber manufacturer. If you are not sure of the value, use the default value

About the Index of Refraction

The index of refraction is the ratio of the speed of light in a vacuum to the speed of light in a fiber. The tester uses the index of refraction to calculate fiber length. When you increase the **IOR** value, the calculated length decreases.

The default values the tester has for each fiber type are satisfactory for most applications. Small differences between the default **IOR** and the actual **IOR** of a fiber usually do not make enough difference in length to make a fiber fail a test.

It is necessary to change the IOR at these times:

- The customer tells you to use a specific **IOR** value for the job.
- You test long fibers where a small difference between the default and actual values of **IOR** makes an unacceptably large error in length measurements.
- In some types of cable, some or all of the fibers are longer than the cable jacket. This can occur because the fiber has a spiral path inside the jacket. When you use an OTDR to locate faults on these cables, the fault is closer to the OTDR than the measured distance along the cable jacket. To make the measured distance to the fault the same as the distance along the cable jacket, adjust the **IOR** until the length of the fiber is the same as the length of the jacket.

To change the IOR for a fiber, make a custom fiber type.

Make a Custom Fiber Test Limit

Custom limits let you enter minimum and maximum values for tests you do with CertiFiber Pro OLTS and OptiFiber Pro OTDR modules and FiberInspector probes. This lets you use customer requirements to pass or fail fiber links or components such as patch cords and connectors. For OLTS tests, you can also select a fixed loss budget or a loss budget that the tester calculates based on the length of the link.

You can make up to 20 custom test limits for fiber cable. The tester keeps custom limits with the other limits in the main tester (not in the module). The names of custom limits have an asterisk (*) at the start and end.

To make a custom fiber test limit

1. On the home screen, tap the test setup panel.
2. On the **CHANGE TEST** screen, tap a fiber test, then tap **EDIT**.

   Note

   You must select a test before you make a custom test limit, but you can use the limit you make in any test that has the fiber types that the limit supports.

3. On the **TEST SETUP** screen, tap **Test Limit**, tap **MORE**, tap **Custom**, then tap **MANAGE**.
4. On the **MANAGE CUSTOM** screen, tap the **Create** panel.

   For a custom FiberInspector test, the **USE DEFAULTS FROM** screen shows. Select **Multimode** or **single-mode**

5. On the **NEW CUSTOM LIMIT** screen, tap **Enter New Limit Name**, use the keyboard to enter a name, then tap **DONE**.

6 Select or enter settings as necessary for the limit. See Table 23 for OLTS settings, Table 24 for OTDR settings, and Table 25 for FiberInspector tests.

7 When you have entered all necessary limits, tap **SAVE** on the **NEW CUSTOM LIMIT** screen. The tester adds an asterisk (*) to the start and end of the custom fiber limit name.

Table 23. Custom Test Limit Settings for Loss/Length Tests

Setting	Description
Length	Enter a maximum length for the link.
Loss Budget	**Fixed**: The tester compares the loss of the link to a fixed value to give a **PASS** or **FAIL** result for the loss test. You enter maximum values of **Overall Loss** for each applicable wavelength under **Wavelength specific settings**. **Length Based**: The tester uses values you enter for **Connector**, **Splice**, and **Loss/km** and the measured length of the link to calculate a limit for the loss test.
Loss Type (for **Length Based Loss Budget** only)	**Connector**: Select this if the link uses standard connectors, such as SC, LC, ST, or FC connectors. For the **Connection Loss (dB)**, enter the maximum loss for one connection. **MPO Module**: Select this if the link uses MPO modules. **Connection Loss (dB)** changes to **MPO Module Loss (dB)**. For **MPO Module Loss (dB)**, enter the maximum loss for one MPO module.
Splice Loss (for **Length Based Loss Budget** only)	Enter a maximum value for the loss of one splice.

Table 23. Custom Test Limit Settings for Loss/Length Tests (continued)

Setting	Description
Wavelength specific settings	For a fixed loss budget, enter maximum values of **Overall Loss** for a link for each applicable wavelength. For a length-based loss budget, enter maximum values of **Loss/km** for the fiber type for each applicable wavelength.
Length	Enter a maximum length for the link.
General Settings: **Overall Loss**	Enter a maximum value for the loss of all components and fiber in the link. Enter a minimum loss value if receiver saturation is possibly a problem in the installation.
General Settings: **ORL**	Optical return loss is the total reflectance for all components in the link. This includes fiber segments, connectors, splices, and faults. ORL is the ratio of the light from the source to the light that the link reflects back to the source. ORL values are in units of positive dB. A larger ORL value shows that less light is reflected back to the source. For example, a link with an ORL of 45 dB reflects less light back to the source than a link with an ORL of 30 dB. Enter a minimum for the total reflectance for the link.
General Settings: **Segment Attenuation Coefficient**	Enter maximum and minimum values of attenuation per kilometer for a fiber segment in the link. Fibers that are not within these limits may be of poor quality or the wrong type *Note* *In some situations, the tester cannot measure the segment attenuation coefficient for short segments (50 m to 500 m, depending on wavelength and fiber characteristics).*

(continued)

Table 24. Custom Test Limit Settings for OTDR Tests

Setting	Description
Event Settings: Connector Loss	Enter maximum and minimum* values as necessary for the loss of one connector.
Event Settings: Splice Loss	Enter maximum and minimum* values as necessary for the loss of one splice.
Event Settings: Reflectance	Reflectance is the return loss for one event. It is the ratio of the light reflected at one point on the fiber to the light that gets to that point from the source. Reflectance values are in units of negative dB. A smaller (more negative) reflectance value shows that less light is reflected back to the source. For example, a reflectance of -45 dB shows for a good multimode connection. A reflectance of -20 dB shows for a bad multimode connection that reflects more light back to the OTDR. Enter maximum and minimum* values of reflectance as necessary for one event.
Splitter Settings: **Splitter Reflectance** (for **Auto PON OTDR** and **Manual PON OTDR** tests)	Enter a maximum value of reflectance for a splitter for each wavelength. To use the same value for all wavelengths, tap **Use one value for all wavelengths**, then enter a value.
N/A	The tester will not compare the measurement to this value and will not give the measurement a **PASS** or **FAIL** result.

* Usually, minimum values are not necessary, but they are available for special situations. For example, the power at the receiving end of a link may need to be within a certain range for equipment to operate correctly. The loss budget for such a link may include minimum values for components.

Table 25. Custom Test Limit Settings for FiberInspector Tests

Setting	Description
Zones	These panels show the widths of the zones on the endface. The ranges for the widths See Figure 217. **A: Core**: The core typically has a diameter of 50 µm or 62.5 µm for multimode fiber or 9 µm for single-mode fiber. The ranges for the diameter of the core zone are 0 µm to 65 µm for multimode and 0 µm to 25 µm for single-mode. **B: Cladding**: The cladding zone starts at the edge of the core zone. The range for the outside diameter of the cladding zone is 110 µm to 120 µm for multimode and single-mode. **C: Adhesive**: The adhesive zone is between the cladding and contact zones. The tester does not have settings for this zone because standards for endface analysis do not require an analysis of defects in the adhesive zone. The tester shows only the width of the zone, which depends on the diameters of the cladding and contact zones. **D: Contact**: The range for the inside diameter of the contact zone is 130 µm to 140 µm for single-mode and multimode. The outside diameter of the contact zone is always 250 µm.
Zone Diameter	Change the minimum or maximum diameter to change the width of the zone.
Defects Scratches	Defects include dirt particles, chips, and pits. **Size** and **Width**: You can specify up to five sizes of defects and widths of scratches. To specify another size, tap **ADD SIZE** or **ADD SCRATCH**. The maximum size or width you can specify is 250 µm. The lists of defects and scratches include one for all defects or scratches larger than the largest one you specify. For this one, you can specify the number allowed. **Number Allowed**: You can allow from 0 to 10 of each size of defect or scratch, or select **Any** to allow any number of a defect. To delete a defect or scratch, tap .

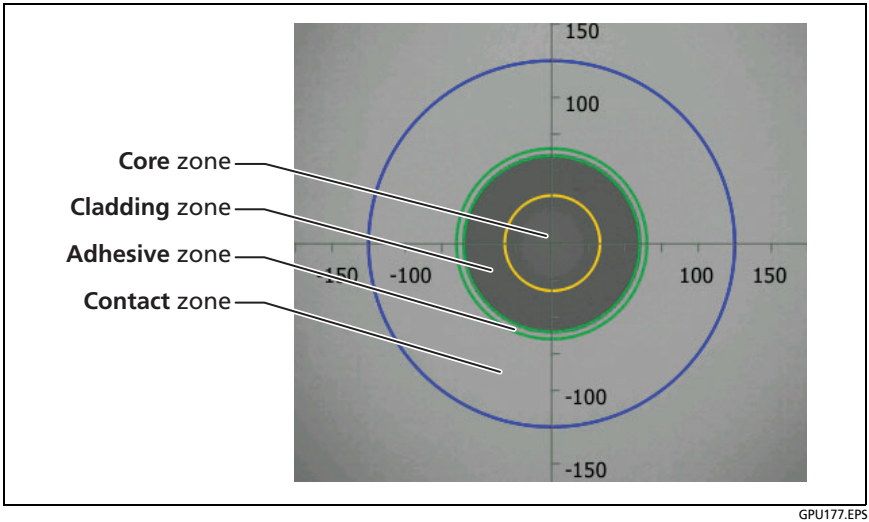

Figure 217. Zones on a Fiber Endface

Select a Custom Fiber Type or a Custom Limit

1. On the home screen, tap the test setup panel.
2. On the **CHANGE TEST** screen, tap the test, then tap **EDIT**.
3. Select a custom fiber type or limit:
   - On the **TEST SETUP** screen, tap **Fiber Type**, tap **MORE**, tap **Custom**, then tap a custom fiber type.
   - On the **TEST SETUP** screen, tap **Test Limit**, tap **MORE**, tap **Custom**, then tap a custom limit.
4. On the **TEST SETUP** screen, tap **SAVE**.

Edit an Existing Custom Fiber Type or Test Limit

1. On the home screen, tap the test setup panel.
2. On the **CHANGE TEST** screen, tap the test, then tap **EDIT**.
3. On the **TEST SETUP** screen, tap **Fiber Type** or **Test Limit**, tap **MORE**, tap **Custom**, then tap **MANAGE**.
4. On the **MANAGE CUSTOM** screen, tap the **Edit** panel, then tap the fiber type or test limit you want to edit.

Delete a Custom Fiber Type or Test Limit

1. On the home screen, tap the test setup panel.
2. On the **CHANGE TEST** screen, tap the test, then tap **EDIT**.
3. On the **TEST SETUP** screen, tap **Test Limit**, tap **MORE**, tap **Custom**, then tap **MANAGE**.
4. On the **MANAGE CUSTOM** screen, tap the **Delete** panel, tap the fiber type or test limit you want to delete, then tap **DONE**.

Chapter 20: Maintenance

⚠⚠Warning

To prevent possible fire, electric shock, personal injury, or damage to the tester:

- **Do not open the case. You cannot repair or replace parts in the case.**
- **Use only replacement parts that are approved by Fluke Networks.**
- **If you replace parts that are not specified as replacement parts, the warranty will not apply to the product and you can make the product dangerous to use.**
- **Use only service centers that are approved by Fluke Networks.**

⚠Caution

If you replace electrical parts yourself, the tester will possibly not have the correct calibration and can give incorrect test results. If the calibration is not correct, cable manufacturers can remove their warranty from the cabling you install.

Verify Operation

The tester does a self test when you turn it on. If the tester shows an error or does not turn on, refer to “If the Tester Does Not Operate as Usual” on page 628.

Clean the Tester

To clean the touchscreen, turn off the tester, then use a soft, lint-free cloth that is moist with water or water and a mild detergent.

To clean the case, use a soft cloth that is moist with water or water and a mild detergent.

⚠⚠Warning

Do not put the tester or the battery pack in water.

⚠Caution

To prevent damage to the touchscreen or the case, do not use solvents or abrasive materials.

When you clean the touchscreen or the case, do not let liquid get under the plastic around the touchscreen.

To clean the optical connectors on a fiber module, see the instructions in Chapter 7.

Clean the Video Probe

To clean the case, use a soft cloth that is moist with a mild detergent.

⚠Caution

To prevent damage to the case, do not use solvents or abrasive materials.

To clean the lens, remove the adapter tip, then wipe the lens with an optical-grade cloth that is moist with an optical-grade cleaning solution.

See Information About the Tester

To see information about your tester and attached modules and adapters

On the home screen, tap the **TOOLS** icon, then tap **Version Information**. See Figure 218.

To see information about a remote tester

Use DSX or CertiFiber Pro modules and patch cords to connect the main and remote testers together (see Figure 4 on page 22), then tap **REMOTE** on the **Version Information** screen.

Refer to Figure 218:

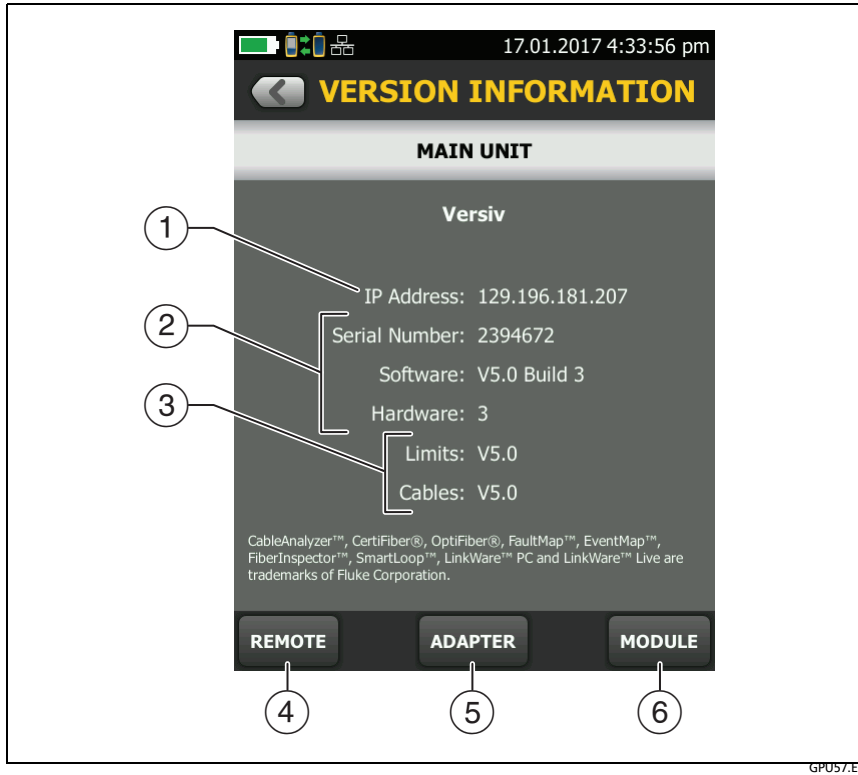

GP057.EPS

Figure 218. VERSION INFORMATION Screen for the Main Tester

① If the tester is connected to a wired network through the Ethernet jack on the side of the tester, the IP address of the tester shows.

② The serial number and the software and hardware versions of the device.

③ The versions of the databases for test limits and cable types. These databases are part of the software version installed in the main tester.

④ If a remote tester is connected to the main tester, tap **REMOTE** to see information about the remote tester.

⑤ If a link interface adapter is attached to the tester, you can tap **ADAPTER** to see this information about the adapter:

- **Serial Number** and the **Hardware** version of the adapter.
- **Autotest Count** is the number of Autotests done with the adapter. You can use this count to monitor the wear on the adapter's jack or plug.
- **Current Series** is an Autotest count that you can reset. To reset the counter, tap **Reset Series**.

⑥ Tap **MODULE** to see the **Serial Number**, **Software** version, and **Calibration Date** of the attached module.

The software version of the module is not the same as the version of the main tester. Most software updates affect the software only in the main tester, so the main tester's version number is higher than the module's.

The **Calibration Date** is the date when the module was calibrated at a Fluke Networks factory or service center.

If the module was used for the first time within 6 months after it was calibrated during manufacturing, **Calibration Start Date** shows. This is the date the module was first used. This is typical for new modules.

If the first use was more than 6 months after calibration, the **Calibration Start Date** is the date the module was calibrated, plus 6 months. For example, if the module was manufactured and calibrated on February 1st, 2015, but not used until October 1st, 2015, the **Calibration Start Date** is August 1st, 2015.

To keep the module in calibration, send it to an authorized service center within 12 months of the **Calibration Start Date** (or the **Calibration Date** if the **Calibration Start Date** is not shown).

Update the Software

New software gives you access to new features and the latest test limits and cable types. Software updates are available on the Fluke Networks website.

You can use a PC to install a software update, or connect an updated main tester to a remote or to another main tester to update those testers.

You can also use LinkWare Live to download a software update from the cloud to your main tester, then use the main tester and a USB cable to install the update in the remote.

About Versiv and Versiv 2 Update Files

Software update files have these extensions:

- Versiv testers: .cic
- Versiv 2 testers: .ci2

The update files are not interchangeable. LinkWare PC and LinkWare Live let you install only the correct file in your Versiv or Versiv 2 tester.

Use a PC to Update the Software

⚠Caution

To prevent unexpected loss of power, connect the ac adapter to the tester when you update the software.

Note

The software update procedure does not delete the test records, project settings, or user preferences in the tester, but can possibly change the factory-installed cable types or test limits.

1. Install the latest version of LinkWare PC software on your PC. LinkWare PC is available on the Fluke Networks website.
2. Connect the Micro USB port on the tester to a USB port on the PC. See Figure 219.
3. LinkWare PC automatically tells you if new software for the tester is available on the Fluke Networks website, and lets you install the software.

   Note

   Older versions of LinkWare PC do not start the update procedure automatically. For older versions, you must have the software update file on a disk or USB drive and click  *to start the update procedure.*
4. The tester reboots when the update is completed. To make sure the update was installed correctly, tap the **TOOLS** icon on the home screen, tap **Version Information**, then make sure the correct version shows.
5. If you have a remote, do steps 2 through 4 again for the remote tester.

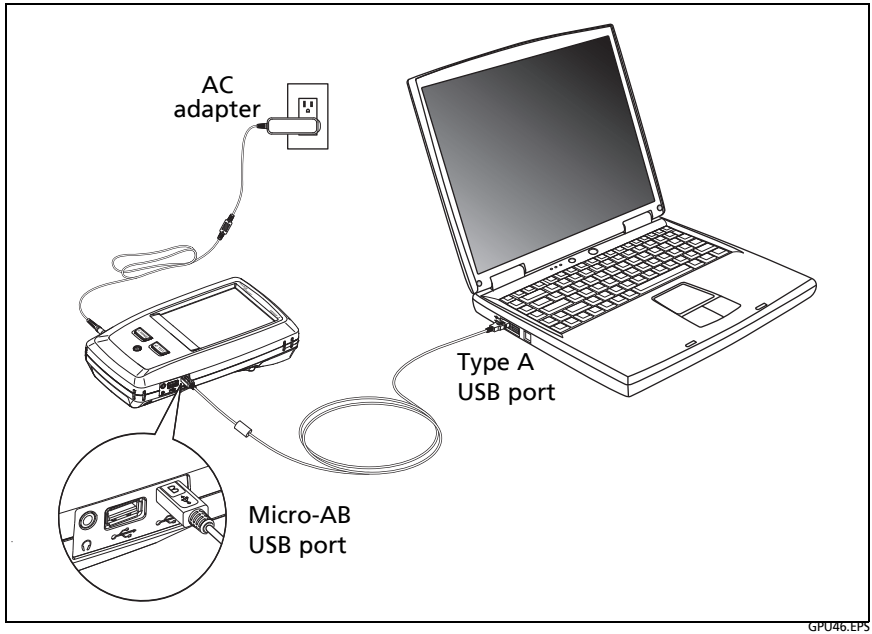

Figure 219. How to Connect the Tester to a PC

Use an Updated Main Tester to Update Other Testers

1. Turn on both testers and connect the AC adapters to both testers.
2. Use the USB cable provided to connect the updated main tester to the remote or to another main. See Figure 220.
3. Follow the instructions shown on the display of the updated main tester.

Note for Versiv remotes

If a remote has newer software than the main tester, the main tester can install the older software in the remote so that you can use the two testers together. The remote cannot install the newer software in the main tester.

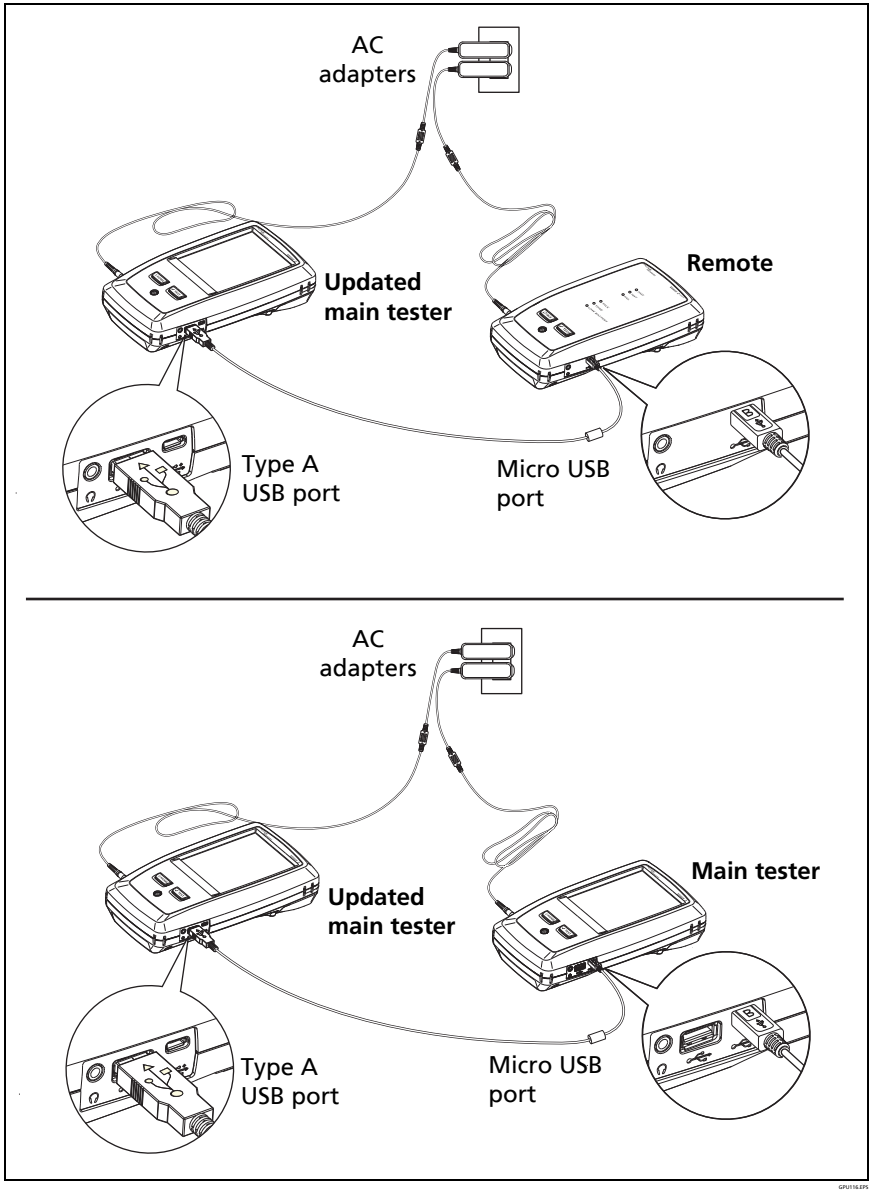

Figure 220. How to Connect Testers Together to Update the Software

Use LinkWare Live to Update the Software

1. For a wired network: Use an appropriate cable to connect the tester's RJ45 Ethernet port to a network port.

   For a Wi-Fi network: For a Versiv tester that uses an external Wi-Fi adapter, connect the Wi-Fi adapter to the tester's USB port.

2. On the home screen, tap **SYNC**.

3. For a Wi-Fi network: If the network selection screen shows, connect to a network:

   a. Select a network.

   b. Enter security information.

   c. Go back to the previous screen, then tap **CONNECT**.

   d. Go back to the home screen, then tap **SYNC**.

4. On the **LWL SIGN IN** screen, enter the ID and password for your LinkWare Live account, then tap **SIGN IN**.

5. If a software update is available, the tester shows a message. Tap **YES** to install new software in your tester.

6. The tester reboots when the update is completed.

7. To install the update in a remote or another main tester, use the USB cable provided to connect the updated main tester to the other tester. See Figure 220.

8. Follow the instructions shown on the display of the updated main tester.

Update the Software in a Module

To update the software in a module, attach it to a tester that has the latest software. The tester automatically installs the software in the module.

Extend the Life of the Battery

⚠⚠Warning

To prevent possible fire, electric shock, or personal injury, read the warnings about the rechargeable battery under "Safety Information" on page "Safety Information" on page 5.

- Do not frequently let the battery discharge completely.
- Do not keep the battery at temperatures below -20 °C (-4 °F) or above +50 °C (+122 °F) for periods longer than one week.
- Before you put a battery into storage, charge it to approximately 50 % of full charge.

Store the Tester

- Before you store a tester or an extra battery for a long period, charge the battery to approximately 50 % of full charge. The discharge rate of the battery is 5 % to 10 % each month. Check the battery every 4 months and charge it if necessary.
- Keep a battery attached to the tester during storage. If you remove the battery for more than approximately 24 hours, the tester will not keep the correct time and date.
- See "Environmental and Regulatory Specifications" on page 631 for storage temperatures.

Remove the Battery

Figure 221 shows how to remove the battery.

Notes

If you remove the battery and do not connect the ac adapter, the clock keeps the current date and time for a minimum of 4 hours.

The screw does not come out of the battery door.

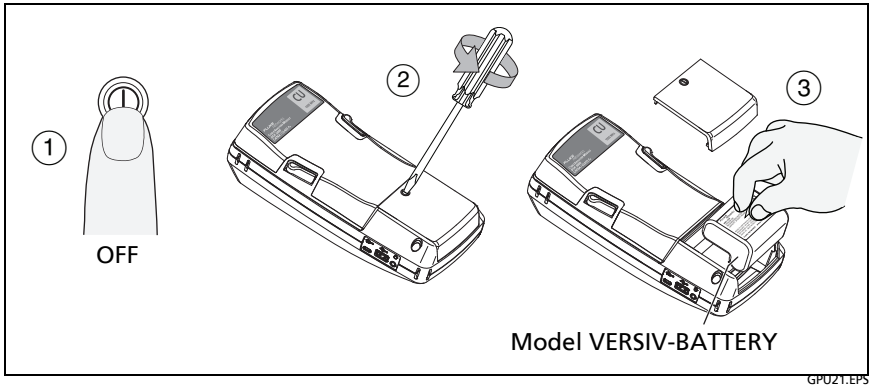

Figure 221. How to Remove the Battery

⚠⚠Warning

To prevent possible electrical shock, fire, or personal injury, do not keep cells or batteries in a container where the terminals can be shorted.

Replace the Tip on a DSX-PLA004 Connector

Over time, the gold plating on the DSX-PLA004 adapter's RJ45 connector's contacts becomes worn. This can cause test result margins to shrink. Damage to the contacts can also cause problems with tests.

When margins begin to shrink, or if the RJ45 tip is damaged, replace the tip with a new one. New tips are available in the DTX-PLA002PRP replacement parts kit. The connector's latch can also become worn, so the parts kit also includes replacement latches.

To replace the tip and latch

1. Remove the adapter from the tester.
2. Use a Phillips screwdriver to loosen the screw on the connector case; then remove and replace the tip or latch as shown in Figure 222.
3. Make sure that the conductive washer is on the case screw as shown below.
4. Reassemble the connector case, then tighten the screw.

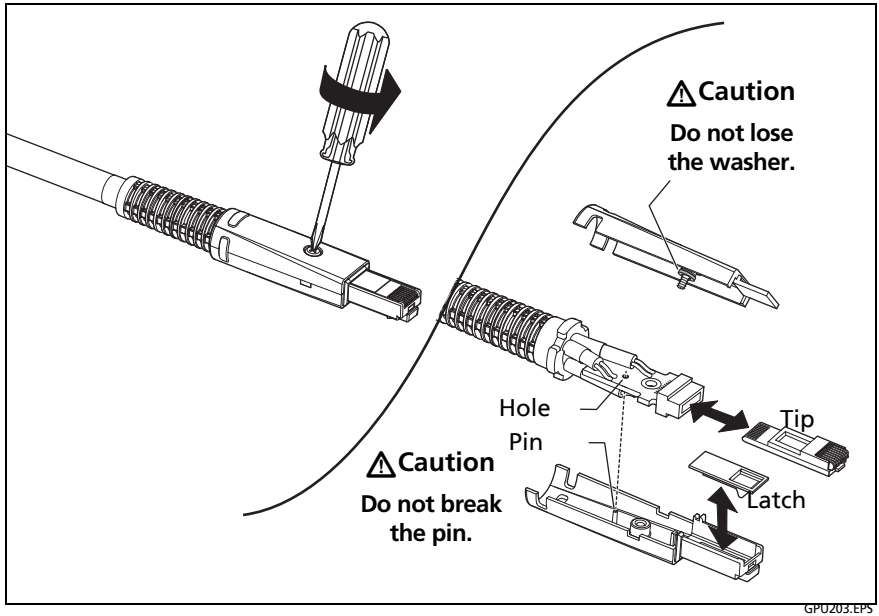

Figure 222. How to Replace the DSX-PLA004 Adapter's Tip and Latch

Traceable Calibration Period

To make sure that the modules operate within the published specifications for accuracy, have them calibrated at an Authorized Fluke Networks Service Center every 12 months. To get information on factory calibration, contact an authorized Fluke Networks Service Center.

To see when the tester last received a factory calibration, tap the **TOOLS** icon on the home screen, then tap **Version Information**.

Note

When you send modules to a Service Center, it is typically not necessary to also send the main and remote testers.

If the Tester Does Not Operate as Usual

If the tester does not operate as usual or if it shows an unusual message, see Table 26 for possible explanations and solutions to some conditions that can occur.

If the condition continues, contact Fluke Networks for assistance, or search the Fluke Networks Knowledge Base for a solution.

If you contact Fluke Networks, have available the serial number, software and hardware versions, and calibration date for the tester, if possible. To see this information, tap the **TOOLS** icon on the home screen, then tap **Version Information**. If the tester does not turn on, remove the modules to find the stickers with the serial numbers.

You can also use LinkWare PC software to upload the system log from the tester. This file contains information that can possibly help Fluke Networks find a solution to an unusual problem.

Before You Send a Main Tester to a Service Center

⚠Caution

If you send a main tester to a Service Center, make sure you download any test results you must keep to LinkWare Live, LinkWare PC, or to a USB flash drive. Service procedures can possibly delete test results, and Fluke Networks is not liable for lost results.

Table 26. Possible Solutions for Unusual Behavior

The touchscreen or the keys do not respond. Press and hold ⏻ until the tester turns off. Then turn on the tester. If the problem continues, install the latest version of software in the tester.
The tester will not turn on even though the battery is charged. The safety switch or the fuse in the battery is possibly open. Wait a few seconds, then try again. If the tester does not turn on, the battery is possibly bad and must be replaced. The tester can operate on AC power if the battery does not operate.
The OTDR Port Connection Quality gauge is not in the "Good" range. • The fiber endface in the OTDR connector is possibly dirty or damaged. Clean the connector and inspect the endface with a video probe. If an endface is damaged, contact Fluke Networks for service information. • Remove the fiber adapter from the module and inspect the adapter for damage. Make sure that the white plastic ring inside the center tube shows no damage.
Test results appear to be incorrect. • The tester possibly has incorrect settings. Make sure you selected the correct cable type and test limit. If you did a **Manual OTDR** test, do an **Auto OTDR** test to see if you get the correct results. • The tester is connected to the link with the wrong type of fiber. Make sure you use the correct type of launch/tail cords. See Chapter 15 "Diagnose Problems in Fiber Links" for information on how incorrect settings and connections can possibly affect your test results.See the Technical Reference Handbook for information on how incorrect settings and connections can possibly affect your test results.
The message "Selected test limit or fiber type is not valid for this test" shows. • The test limit requires two wavelengths, but you selected only one. Select the both wavelengths on the **TEST SETUP** screen. • The installed module does not support the selected fiber type or test limit. For example, the test limit has a single-mode fiber type, but a multimode module is installed. Select a different fiber type or test limit or install a different module.

Options and Accessories

For a complete list of options and accessories go to the Fluke Networks website at **www.flukenetworks.com**.

To order options and accessories, contact an authorized Fluke Networks distributor.

Chapter 21: Specifications

Notes

Specifications can change without notice. For the latest specifications, go to the Fluke Networks website.

Specifications apply at 23 °C (73 °F), unless otherwise noted.

Environmental and Regulatory Specifications

Operating temperature[1, 2, 3]	With DSX CableAnalyzer modules: 32 °F to 113 °F (0 °C to 45 °C) With CertiFiber Pro or OptiFiber Pro modules: 14 °F to 113 °F (-10 °C to +45 °C)
Storage temperature[4]	With battery: 14 °F to 140 °F (-10 °C to +60 °C) Without battery: -22 °F to +140 °F (-30 °C to +60 °C)
Operating relative humidity (% RH without condensation)	0 % to 90 %, 32 °F to 95 °F (0 °C to 35 °C) 0 % to 70 %, 95 °F to 113 °F (35 °C to 45 °C) Uncontrolled: <0 °C

1. Using battery power. With ac power: 0 °C to 45 °C.
2. With the OptiFiber Pro OTDR module: Real Time Trace function used for no more than 5 minutes in a 15-minute period. Maximum ambient temperature is 35 °C for continuous use of the Real Time Trace function.
3. The battery will not charge if its temperature is outside the range of 32 °F to 104 °F (0 °C to 40 °C).
4. Do not keep the battery at temperatures below -20 °C (-4 °F) or above +50 °C (+122 °F) for periods longer than one week. If you do, the battery capacity can decrease.

(continued)

Safety	IEC 61010-1 Pollution degree 2
EMC	**Versiv and Versiv 2 main and remote units:** CISPR 11: Group 1, Class A Group 1: Equipment has intentionally generated and/or uses conductively-coupled radio frequency energy that is necessary for the internal function of the equipment itself. Class A: Equipment is suitable for use in all establishments other than domestic and those directly connected to a low-voltage power supply network that supplies buildings used for domestic purposes. There may be potential difficulties in ensuring electromagnetic compatibility in other environments due to conducted and radiated disturbances. Caution: This equipment is not intended for use in residential environments and may not provide adequate protection to radio reception in such environments. Emissions that exceed the levels required by CISPR 11 can occur when the equipment is connected to a test object. Korea (KCC): Class A Equipment (Industrial Broadcasting & Communication Equipment) Class A: Equipment meets requirements for industrial electromagnetic wave equipment and the seller or user should take notice of it. This equipment is intended for use in business environments and not to be used in homes. USA (FCC): 47 CFR 15 subpart B. This product is considered an exempt device per clause 15.103. **Versiv main and remote units and Versiv 2 remote units:** International: IEC 61326-1: Basic Electromagnetic Environment
Altitude	Operating: 13,123 ft (4,000 m); 10,500 ft (3,200 m) with ac adapter Storage: 39,370 ft (12,000 m)

Power

Battery type	Lithium ion battery pack, 7.2 V
Charging Temperature	+32 °F to +113 °F (0 °C to +45 °C)
Battery life	8 hr typical
Charge time	Tester off: 4 hours to charge from 10 % capacity to 90 % capacity. Tester on: 6 hours to charge from 10 % capacity to 90 % capacity with the tester on.
Power Adapter	Input: 100 to 240 VAC ±10%, 50/60Hz Output: 15 VDC, 2 A maximum Class II

DSX-8000 CableAnalyzer Module Specifications

Note

Specifications for tests on twisted pair cabling apply to 100 Ω cable. For information on measurement performance for cable with a different impedance, contact Fluke Networks.

DSX-8000 Times for a Full, 2-Way Autotest

Category	Autotest Time[1,2]
Cat 6A/Class E_A	8 seconds
ISO 11801 PL Class E (includes TCL)	< 16 seconds[3]
Cat 8/Class I/II	< 16 seconds
Cat 8/Class I/II, All tests	< 34 seconds

1. On unshielded cable. Autotests on shielded cable take approximately 1.5 seconds longer.
2. The first Autotest after power-on takes approximately 2 seconds longer. If the Autotest includes common-mode measurements, add 0.8 seconds more.
3. Also applicable to any Cat 6/Class E Autotest with common-mode measurements.

DSX-8000 Module: Tests and Frequencies Supported

Twisted Pair Cabling

- TIA Cat 3, 4, 5, 5e, 6, 6A, 8 certification per TIA 568.2-D
- ISO/IEC Class C and D, E, E_A, F, F_A,Class I/II certification per ISO/IEC 11801:2002 and amendments
- Maximum frequency: 2000 MHz

Coaxial Cabling (optional DSX-CHA003 coaxial adapters required)

- DS3, CATV, 10BASE-2, 10BASE-5, generic coaxial cable
- Maximum frequency: 1200 MHz

DSX-8000 Standard Link Interface Adapters

DSX-CHA804 Cat 8/Class I Channel Adapters

- Jack type and life: shielded RJ45, 8-pin modular, >5000 insertions
- Tests supported: shielded and unshielded cable, TIA Cat 3, 4, 5, 5e, 6, 6A, 8 and ISO/IEC Class C, D, E, E_A, Class I channels

DSX-PLA804 Cat 8/Class I Permanent Link Adapters

- **Life of module contacts (typical):** >5,000 cycles
- **Dimensions (each adapter):** 3.0 in x 2.1 in x 1.2 in (75 mm x 54 mm x 30 mm)
  Permanent link adapter has a 4.85 ft (1.48 m) ±0.25 ft (0.1 m) cable.
- Tests supported: shielded and unshielded cable, TIA Cat 3, 4, 5, 5e, 6, 6A, 8 and ISO/IEC Class C, D, E, E_A, Class I permanent links

DSX-8000 Measurement Accuracy

For Category 8/Class I/II tests, the DSX-8000 CableAnalyzer modules are compliant with Level 2G requirements of TIA 1152A.

For Class I/II tests, the DSX-8000 CableAnalyzer modules are compliant with Level G requirements of IEC 61935-1.

For Category 6A/Class E_A tests, the DSX Series CableAnalyzer modules are compliant with Level IIIe requirements of TIA 1152 and Level IV of IEC 61935-1.

Worst case accuracy performance parameters are used for asterisk (*) results reporting. These are based on computation of the overall measurement accuracy based on the worst case of each parameter at each frequency data point. Observed differences between laboratory equipment and DSX CableAnalyzer modules using calibration verification artifacts were used as a confirmation.

The next table shows the accuracy performance parameters for the DSX-8000 modules.

DSX-8000 Level 2G Accuracy Performance Parameters per IEC Guidelines

Parameter	Baseline Field Tester	Field Tester with Level 2G Permanent Link Adapter	Field Tester with Level 2G Channel Adapter
Dynamic range	3 dB over test limit NEXT and FEXT 65 dB PS NEXT and FEXT 62 dB		
Amplitude resolution	0.1 dB		

(continued)

DSX-8000 Level 2G Accuracy Performance Parameters per IEC Guidelines (continued)

Parameter	Baseline Field Tester	Field Tester with Level 2G Permanent Link Adapter	Field Tester with Level 2G Channel Adapter
Frequency range and resolution	1 to 31.25 MHz: 150 kHz 31.25 to 100 MHz: 250 kHz 100 to 250 MHz: 500 kHz 250 to 600 MHz: 1 MHz 600 to 1000 MHz: 2 MHz		
Dynamic Accuracy NEXT	± 0.75 dB		
Dynamic Accuracy IL	± 0.75 dB		
Dynamic Accuracy ACR-F	± 1.0 dB (FEXT dynamic accuracy is tested to ± 0.75 dB)		
Source/load return loss	1 to 1000 MHz: 21 – 9 log(f/100), 20 dB maximum 1000 to 2000 MHz: 12 dB	1 to 1000 MHz: 19 – 9 log(f/100), 20 dB maximum 1000 to 2000 MHz: 10 dB	
Random Noise Floor	1 to 1000 MHz: 95 dB 1000 to 1310 MHz: 180.2 - 85.2log(f/100) 1310 to 2000 MHz: 85dB	1 to 1000 MHz: 90 dB 1000 to 1310 MHz: 175.2 - 85.2log(f/100) 1310 to 2000 MHz: 80 dB	

DSX-8000 Level 2G Accuracy Performance Parameters per IEC Guidelines (continued)

Parameter	Baseline Field Tester	Field Tester with Level 2G Permanent Link Adapter	Field Tester with Level 2G Channel Adapter
Residual NEXT	1 to 2000 MHz: 90 – 20 log(f/100) (measured to 90 dB maximum)	1 to 2000 MHz: 85 - 20 log(f/100) (measured to 90 dB maximum)	1 to 500 MHz: 64 - 20 log(f/100) (measured to 90 dB maximum) 500 to 2000 MHz: 50.0206 - 45log(f/100)
Residual FEXT	1 to 2000 MHz: 80 - 20 log(f/100) (measured to 85 dB maximum)	1 to 2000 MHz: 70 - 20 log(f/100) (measured to 85 dB maximum)	1 to 2000 MHz: 43.1 - 20 log(f/100) (measured to 85 dB maximum)
Output Signal Balance	1 to 600 MHz: 40 - 20 log(f/100) (measured to 40 dB maximum) 600 to 2000 MHz: 24.4 dB	1 to 600 MHz: 37 - 20 log(f/100) (measured to 40 dB maximum) 600 to 2000 MHz: 21.4 dB	
Common Mode Rejection	1 to 600 MHz: 40 - 20 log(f/100) (measured to 40 dB maximum) 600 to 2000 MHz: 24.4 dB	1 to 600 MHz: 37 - 20 log(f/100) (measured to 40 dB maximum) 600 to 2000 MHz: 21.4 dB	
Reflection Tracking	± 0.5 dB		
Directivity	1 to 2000 MHz: 30.7 - 9log(f/100), 30 dB maximum	1 to 300 MHz: 28.7 - 9log(f/100), 30 dB maximum	

(continued)

DSX-8000 Level 2G Accuracy Performance Parameters per IEC Guidelines (continued)

Parameter	Baseline Field Tester	Field Tester with Level 2G Permanent Link Adapter	Field Tester with Level 2G Channel Adapter
Source Match	1 to 1000 MHz: 20 dB 1000 to 2000 MHz: 35 - 15log(f/100)		
Return loss of Termination	1 to 1000 MHz: 21 - 9log(f/100), 25 dB maximum 1000 to 2000 MHz: 12 dB	1 to 1000 MHz: 19 - 9log(f/100), 25 dB maximum 1000 to 2000 MHz: 10 dB	

DSX-5000 CableAnalyzer Module Specifications

Note

Specifications for tests on twisted pair cabling apply to 100 Ω cable. For information on measurement performance for cable with a different impedance, contact Fluke Networks.

DSX-5000 Times for a Full, 2-Way Autotest

Category	Autotest Time[1,2,3,6]
Cat 5e or 6/Class D or E	< 9 seconds
Cat 6A/Class E_A	10 seconds
ISO 11801 PL Class E (includes TCL)	< 15 seconds[4]
Cat 7/Class F or F_A	< 15 seconds
Class F_A, All tests	< 30 seconds[5]

1. On unshielded cable. Autotests on shielded cable take approximately 0.6 seconds longer.
2. The first Autotest after power-on takes approximately 1.5 seconds longer. If the Autotest includes common-mode measurements, add 0.8 seconds more.
3. AC wire map function adds approximately 3 seconds to Autotest times.
4. Also applicable to any Cat 6/Class E Autotest with common-mode measurements.
5. Also applicable to any Class F/F_A Autotest with common-mode measurements.
6. Tests take more time to complete in long-range communication mode. For example, an Autotest can take 90 seconds to two minutes to complete.

DSX-5000 Module: Tests and Frequencies Supported

Twisted Pair Cabling

- TIA Cat 3, 4, 5, 5e, 6, 6A certification per TIA 568.2-D
- ISO/IEC Class C and D, E, E_A, F, F_A certification per ISO/IEC 11801:2002 and amendments
- Maximum frequency: 1000 MHz

Coaxial Cabling (optional DSX-CHA003 coaxial adapters required)

- DS3, CATV, 10BASE-2, 10BASE-5, generic coaxial cable
- Maximum frequency: 1200 MHz

DSX-5000 Standard Link Interface Adapters

DSX-CHA004 Class E_A Channel Adapters

- Jack type and life: shielded RJ45, 8-pin modular, >5000 insertions
- Tests supported: shielded and unshielded cable, TIA Cat 3, 4, 5, 5e, 6, and 6A and ISO/IEC Class C, D, E, and E_A channels

DSX-PLA004 Class E_A Permanent Link Adapters

- **Life of module contacts (typical):** >5,000 cycles
- **Dimensions (each adapter):** 3.0 in x 2.1 in x 1.2 in (75 mm x 54 mm x 30 mm)
  Permanent link adapter has a 4.85 ft (1.48 m) ±0.25 ft (0.1 m) cable.
- Tests supported: shielded and unshielded cable, TIA Cat 3, 4, 5, 5e, 6, and 6A, and ISO/IEC Class C, D, E, and E_A permanent links

DSX-5000 Long-Range Communication Mode

DSX-5000 modules have a long-range communication mode that the module activates automatically when the cable is significantly longer than 100 m. See “Long-Range Communication Mode (DSX-5000)” on page 161.

DSX-5000 Measurement Accuracy

For Class F_A tests, the DSX-5000 CableAnalyzer modules are compliant with Level V requirements as in the draft 5th edition of IEC 61935-1.

For Category 6A/Class E_A tests, the DSX Series CableAnalyzer modules are compliant with Level IIIe requirements of TIA 1152-A and Level IV of IEC 61935-1.

Worst case accuracy performance parameters are used for asterisk (*) results reporting. These are based on computation of the overall measurement accuracy based on the worst case of each parameter at each frequency data point. Observed differences between laboratory equipment and DSX CableAnalyzer modules using calibration verification artifacts were used as a confirmation.

The next table shows the accuracy performance parameters for the DSX-5000 modules.

DSX-5000 Level V Accuracy Performance Parameters per IEC Guidelines

Parameter	Baseline Field Tester	Field Tester with Level V Permanent Link Adapter	Field Tester with Level V Channel Adapter
Dynamic range	3 dB over test limit NEXT and FEXT 65 dB PS NEXT and FEXT 62 dB		
Amplitude resolution	0.1 dB		
Frequency range and resolution	1 to 31.25 MHz: 150 kHz 31.25 to 100 MHz: 250 kHz 100 to 250 MHz: 500 kHz 250 to 600 MHz: 1 MHz 600 to 1000 MHz: 2 MHz		
Dynamic Accuracy NEXT	± 0.75 dB		
Dynamic Accuracy ACR-F	± 1.0 dB (FEXT dynamic accuracy is tested to ± 0.75 dB)		

(continued)

DSX-5000 Level V Accuracy Performance Parameters per IEC Guidelines (continued)

Parameter	Baseline Field Tester	Field Tester with Level V Permanent Link Adapter	Field Tester with Level V Channel Adapter
Source/load return loss	1 to 300 MHz: 20 – 12.5log(f/100), 20 dB maximum 300 to 600 MHz: 14 dB 600 to 1000 MHz: 21-9 log(f/100)	1 to 300 MHz: 18 – 12.5 log(f/100), 20 dB maximum 300 to 600 MHz: 12 dB 600 to 1000 MHz: 19-9log(f/100)	
Random Noise Floor	95 dB	90 dB	
Residual NEXT	90 – 20 log(f/100) (measured to 85 dB maximum)	85 - 20 log(f/100) (measured to 85 dB maximum)	1 to 600 MHz: 82.3 - 20 log(f/100) 600 to 1000 MHz: 97.9 - 40 log(f/100) (measured to 85 dB maximum)
Residual FEXT	80 - 20 log(f/100) (measured to 85 dB maximum)	75 - 20 log(f/100) (measured to 85 dB maximum)	60 - 15 log(f/100) (measured to 85 dB maximum)
Output Signal Balance	1 to 600 MHz: 40 - 20 log(f/100) 600 to 1000 MHz: 24.4 dB (measured to 60 dB maximum)	1 to 600 MHz: 37 - 20 log(f/100) 600 to 1000 MHz: 21.4 dB (measured to 60 dB maximum)	

(continued)

DSX-5000 Level V Accuracy Performance Parameters per IEC Guidelines (continued)

Parameter	Baseline Field Tester	Field Tester with Level V Permanent Link Adapter	Field Tester with Level V Channel Adapter
Common Mode Rejection	40 - 20 log(f/100) (measured to 60 dB maximum)	37 - 20 log(f/100) (measured to 60 dB maximum)	
Tracking	± 0.5 dB (applicable when IL > 3 dB)		
Directivity	1 to 300 MHz: 27 - 7log(f/100), 30 dB maximum 300 to 600 MHz: 23.7 dB 600 to 1000 MHz: 30.7 - 9 log(f/100) (applicable when IL > 3 dB)	1 to 300 MHz: 25 - 7 log(f/100), 30 dB maximum 300 to 600 MHz: 21.7 dB 600 to 1000 MHz: 27.7 - 9 log(f/100) (applicable when IL > 3 dB)	
Source Match	20 dB (applicable when IL > 3dB)		
Return loss of Termination	1 to 250 MHz: 20 - 15log(f/100), 25 dB maximum 250 to 600 MHz: 14 dB 600 to 1000 MHz: 21 - 9 log(f/100) (applicable when IL > 3 dB)	1 to 250 MHz: 18 - 15 log(f/100), 25 dB maximum 250 to 600 MHz: 12 dB 600 to 1000 MHz: 19 - 9 log(f/100) (applicable when IL > 3 dB)	

DSX Series Module Specifications

DSX Series Adapter and Module Compatibility

For the latest list of adapters, see the Fluke Networks website.

Adapter	Application	Module Compatibility	
		DSX-8000	DSX-5000
DSX-PLA804	Cat 8/Class I Permanent Links	●	
DSX-CHA804	Cat 8/Class I Channels	●	
DSX-PLA-8-TERA	TERA Class II Permanent Links	●	
DSX-CHA-8 TERA	TERA Class II Channels	●	
DSX-CHA-8-GG45	GG45 Class II Channels	●	
DSX-PLA001	Cat 6A/Class E_A Permanent Links with IDC wiring blocks.	●	●
DSX-PLA004	Cat 6A /Class E_A Permanent Links	●	●
DSX-CHA004	Cat 6A /Class E_A Channels	●	●
DSX-CHA003	Coaxial cabling	●	●
DSX-PLA011	TERA Cat 7_A/Class F_A Permanent Links		●
DSX-CHA011	TERA Cat 7_A/Class F_A Channels		●
DSX-CHA012* DSX-CHA-5-GG45	GG45 Cat 7_A/Class F_A Channels		●
DSX-CHA021 4-position D-code	M12 links and patch cords for industrial Ethernet cabling	●	●
DSX-CHA-M12-X 8-position X-code	M12 links and patch cords for industrial Ethernet cabling	●	●

(continued)

Adapter	Application	Module Compatibility	
		DSX-8000	DSX-5000
DSX-CHA-5-IX	ix Industrial Channels	●	●
DSX-PC5e	Cat 5e patch cords	●	●
DSX-PC6	Cat 6 patch cords	●	●
DSX-PC6A	Cat 6A patch cords	●	●

* DSX-CHA012 adapters have the connector on the front of the case.
DSX-CHA-5-GG45 adapters have the connector on the top of the case.

Length of Twisted Pair Cabling

Note

Length specifications do not include the uncertainty of the cable's NVP value.

Parameter	Twisted Pair Cabling	
	Without Remote or in DSX-5000 Long Communication Mode	With Remote
Range	800 m (2600 ft)	150 m (490 ft)
Resolution	0.1 m or 1 ft	0.1 m or 1 ft
Accuracy	± (0.3 m + 2 %); 0 m to 150 m ± (0.3 m + 4 %); 150 m to 800 m	± (0.3 m + 2 %)

Propagation Delay

Parameter	Twisted pair cabling	
	Without Remote or in DSX-5000 Long Communication Mode	**With Remote**
Range	4000 ns	750 ns
Resolution	1 ns	1 ns
Accuracy	± (2 ns + 2 %); 0 ns to 750 ns ± (2 ns + 4 %); 750 ns to 4000 ns	± (2 ns + 2 %)

Delay Skew

Parameter	Twisted Pair Cabling
Range	0 ns to 100 ns
Resolution	1 ns
Accuracy	± 10 ns

DC Loop Resistance

Parameter	DSX-5000	DSX-8000
Range	0 Ω to 540 Ω	0 Ω to 540 Ω
Resolution	0.1 Ω	0.01 Ω
Accuracy	± (1 Ω + 1 %)	± (0.5 Ω + 1 %)
Overload Recovery Time	Less than 10 minutes to rated accuracy following an overvoltage. Referencing is required after repeated or prolonged overvoltage.	

DC Resistance Unbalance

Parameter	Twisted Pair Cabling
Resolution	0.005 Ω
Accuracy for unbalance within a pair	± (0.025 + 0.3% of loop resistance)
Accuracy for unbalance between pairs	±(0.025 + 0.3% of mean loop resistance for the two pairs)

HDTDX Analyzer Specifications for Cables <100 m (328 ft)

Parameter	Twisted Pair Cabling
Distance accuracy	± (0.3 m (1 ft) + 2 % distance)
Distance resolution	0.1 m or 1 ft

HDTDR Analyzer Specifications for Cables <100 m (328 ft)

Parameter	Twisted Pair Cabling
Distance accuracy	± (0.3 m (1 ft) + 2 % distance)
Distance resolution	0.1 m or 1 ft

Characteristic Impedance

The tester gives an estimate of the cable's impedance at 4 m from the start of the link. The accuracy of the measurement is relative to a 100 Ω terminating resistance.

Parameter	Twisted Pair Cabling
Range	70 Ω - 180 Ω
Accuracy	± (5 Ω + 5 % of |100 Ω – Measured|)
Resolution	1 Ω

Tone Generator

Generates tones that can be detected by a tone probe, such as a Fluke Networks IntelliTone™ probe. The tones are on all pairs. The tone generator does not generate the IntelliTone signal.

The tone generator also turns on an inactive main or remote DSX CableAnalyzer connected to the other end of the cable.

Input Protection

Protected against continuous telco voltages and 100 mA over-current. Occasional ISDN over-voltages will not cause damage.

DSX-CHA003 Coaxial Adapter

Connector	Male F-connector. BNC adapter allows connection to coaxial network cabling
Cable types tested	Coaxial video and network cabling
Length	Range: 490 ft (150 m) Resolution: 0.1 m or 1 ft Accuracy: 0 m to 150 m (0 ft to 492 ft): ±(0.3 m + 2 %)
Propagation delay	Range: 750 ns Resolution: 1 ns Accuracy: 0 ns to 750 ns: ±(2 ns + 2%)
Loop resistance	Range: 0 Ω to 530 Ω Resolution: 0.1 Ω Accuracy: ±(1 Ω + 1 %)
Insertion loss Frequency range and resolution Source/load return loss (typical) (75 Ω reference impedance) Random noise floor (typical)	1 to 31.25 MHz: 125 kHz 31.5 to 100 MHz: 250 kHz 100.5 to 250 MHz: 500 kHz 251 to 1200 MHz: 1 MHz 1 to 300 MHz: 20 – 12.5 log(f/100), 20 dB maximum 300 to 1200 MHz: 14 dB 90 dB
Characteristic impedance	Range: 45 Ω to 110 Ω Resolution: 1 Ω Accuracy: ± (5 Ω + 5 % of |75 Ω – Measured|) Cable must be longer than 4 m for a measurement of characteristic impedance.
HDTDR	Range: 150 m (490 ft) Resolution: 0.1 m or 1 ft Accuracy: 0 m to 150 m (0 ft to 492 ft): ±(0.3 m + 2 %)

CertiFiber Pro OLTS Module Specifications

CertiFiber Pro Power Meter Specifications

Input connector	Interchangeable connector adapter (LC standard)
Detector type	InGaAs
Wavelengths	850 nm, 1310 nm, 1550 nm
Power measurement range	850 nm: +10 dBm to -65 dBm All other wavelengths: +10 dBm to -70 dBm
Display resolution	dB, dBm: 0.01 Linear (nW, µW, mW): 0.001 to 9.999, 10.00 to 99.99, 100.0 to 999.9 depending upon value
Display update rate	1 reading per second
Power measurement uncertainty (accuracy)	$< \pm 5\ \% \pm 32$ pW[1,2]
Measurement linearity	$< \pm 0.1$ dB[3]
Re-calibration period	1 year

1. $< \pm 5\ \% \pm 100$ pW at 850 nm
2. Under the following conditions:
   - Power level 100 µW (-10 dBm), continuous wave (CW) for absolute power at 850 nm and 1310 nm.
   - Divergent beam, NA = 0.20 for 50/125 µm and NA = 0.14 for 9/125 µm.
   - Ambient temperature 23° ± 1 °C.
   - SC/UPC connector with ceramic ferrule.
   - After a 5 minute warm-up.
   - Traceable to NIST.
3. -3 dBm to -55 dBm at 850 nm and 1310 nm. Ambient temperature 23 °C ± 1 °C. After a 5 minute warm-up.

CertiFiber Pro OLTS Loss/Length Specifications

Specification	CertiFiber Pro Multimode Modules	CertiFiber Pro single-mode Modules
Testing speeds (excluding referencing times)	Smart Remote mode (2 wavelengths, one direction): < 3 s Far End Source mode[1] (2 wavelengths, one direction): ≤ 2 s Loopback mode (2 wavelengths, one direction): ≤ 2 s	
Input/output connectors	Interchangeable connector adapter (LC standard on input, SC standard on output)	
Launch Condition	Encircled flux compliant to TIA 526-14-C, ISO/IEC 14763-3, and IEC 61280-4-1[2,3]	
Fiber types tested	50/125 µm, 62.5/125 µm multimode fiber	single-mode fiber
Source type and wavelengths	Multimode LED source 850 nm ± 30 nm 1300 nm ± 20 nm	Fabry-Perot laser diode 1310 nm ± 20 nm 1550 nm ± 30 nm
Maximum length measurement	12 km	130 km
Length measurement accuracy	± 1.5 m plus ± 1 % of length	
Output power (nominal)	≥ -24 dBm with EF-TRC	≥ -4 dBm
Output power stability[4]	± 0.05 dB over 8 hours ± 0.03 dB over 15 minutes	± 0.1 dB over 8 hours ± 0.08 dB over 15 minutes

1. In Auto CertiFiber Pro mode. In Auto SimpliFiber Pro mode: < 4 seconds (2 wavelengths). With the source in continuous-wave mode: < 1 second (1 wavelength).
2. At the output of the EF-TRC.
3. Variations between EF measurement equipment may occur but EF compliance can be expected with a 95 % confidence factor.
4. At constant temperature, relative to power level after 15 minute warm up.

CertiFiber Pro OLTS Loss/Length Specifications (cont.)

Specification	CertiFiber Pro Multimode Modules	CertiFiber Pro single-mode Modules
Wavelengths	850 nm, 1300 nm, 1310 nm, 1550 nm	
Power measurement range	850 nm: +10 dBm to -65 dBm All other wavelengths: +10 dBm to -70 dBm	
Display Resolution	dB, dBm: 0.01 Linear (nW, µW, mW): 0.001 to 9.999, 10.00 to 99.99, 100.0 to 999.9 depending upon value	
Power measurement uncertainty (accuracy)	< ± 5 % ± 32 pW[1,2]	
Measurement linearity	< ± 0.1 dB[3]	
Dynamic Range for main-remote communication and nominal length measurement	≥ 12 dB	≥ 26 dB

1. < ± 5 % ± 100 pW at 850 nm
2. Under the following conditions:
   - Power level 100 µW (-10 dBm), continuous wave (CW) for absolute power at 850 nm and 1310 nm.
   - Divergent beam, NA = 0.20 for 50/125 µm and NA = 0.14 for 9/125 µm.
   - Ambient temperature 23° ± 1 °C.
   - SC/UPC connector with ceramic ferrule.
   - After a 5 minute warm-up.
   - Traceable to NIST.
3. -3 dBm to -55 dBm at 850 nm and 1310 nm. Ambient temperature 23 °C ± 1 °C. After a 5 minute warm-up.

OptiFiber Pro OTDR Module Specifications

	Multimode	single-mode
OTDR Port	SC standard Cleanable and interchangeable UPC polish	SC standard Cleanable and interchangeable UPC polish
Wavelengths	850 nm +10 nm/-13 nm 1300 nm +35 nm/-15 nm	1310 nm ±25 nm 1550 nm ±30 nm
Compatible Fiber Types	50/125 µm 62.5/125 µm multimode fiber	single-mode fiber
Event Dead Zone[1]	850 nm: 0.5 m typical 1300 nm: 0.7 m typical	1310 nm: 0.6 m typical 1550 nm: 0.6 m typical
Attenuation Dead Zone[2]	850 nm: 2.5 m typical 1300 nm: 4.5 m typical	1310 nm: 3.6 m typical 1550 nm: 3.7 m typical

1. Measured at 1.5 dB below non-saturating reflection peak with the shortest pulse width. Reflection peak < -40 dB for multimode and < -50 dB for single-mode.
2. Measured at ± 0.5 dB deviation from backscatter, with a reflection peak < -40 dB and a 3 ns pulse width for multimode, and < -50 dB and a 10 ns pulse width for single-mode.

OptiFiber Pro OTDR Module Specifications (cont.)

	Multimode	single-mode
Dynamic Range[3, 6, 7]	850 nm: 28 dB typical 1300 nm: 30 dB typical	1310 nm: 32 dB typical 1550 nm: 30 dB typical
Maximum Distance Range Setting[4]	40 km	130 km
Distance Measurement Range[5, 6, 8, 9, 10, 11]	850 nm: 9 km 1300 nm: 35 km	1310 nm: 80 km 1550 nm: 130 km
Distance Measurement Accuracy[12]	±1 ±(0.00005 x distance) ± (0.5 x resolution) meters typical	±1 ±(0.00005 x distance) ±(0.5 x resolution) meters typical

3. For typical backscatter coefficient for OM1 fiber: 850: -65 dB, 1300: -72 dB
4. Maximum settings for the SmartLoop OTDR test are 20 km for multimode and 60 km for single-mode.
5. Typical backscatter and attenuation coefficients for OM2-OM4 fiber: 850 nm: -68 dB; 2.3 dB/km: 1300 nm: -76 dB; 0.6 dB/km
6. Typical backscatter and attenuation coefficients for OS1-OS2 fiber: 1310 nm: -79 dB; 0.32 dB/km; 1550 nm: -82 dB; 0.19 dB/km
7. SNR=1 method, 3 minute averaging, widest pulse width
8. 850 nm: 9 km typical to find the end or 7 km typical to find a 0.1 dB event (with a maximum of 18 dB attenuation prior to the event)
9. 1300 nm: 35 km typical to find the end or 30 km typical to find a 0.1 dB event (with a maximum of 18 dB attenuation prior to the event)
10. 1310 nm: 80 km typical to find the end or 60 km typical to find a 0.1 dB event (with a maximum of 20 dB attenuation prior to the event).
11. 1550 nm: 130 km typical to find the end or 90 km typical to find a 0.1 dB event (with a maximum of 18 dB attenuation prior to the event).
12. Does not include index of refraction error and does not include automatic event location error.

(continued)

OptiFiber Pro OTDR Module Specifications (cont.)

	Multimode	single-mode
Linearity[13, 14]	±0.03 dB/dB typical maximum	±0.03 dB/dB typical maximum
Reflectance Range[5, 6]	850 nm: -14 dB to -57 dB typical 1300 nm: -14 dB to -62 dB typical	1310 nm: -14 dB to -65 dB typical 1550 nm: -14 dB to -65 dB typical
Reflectance Accuracy[14]	± 4 dB typical maximum	±2 dB typical maximum
Sample Resolution	3 cm to 400 cm	3 cm to 400 cm
Pulse Widths (nominal)	850 nm: 3, 5, 20, 40, 200 ns 1300 nm: 3, 5, 20, 40, 200, 1000 ns	3, 10, 30, 100, 300, 1000 ns 3000, 10000, 20000 ns
Loss Threshold Setting	0.01 dB to 1.5 dB Adjustable in 0.01 dB increments	0.01 dB to 1.5 dB Adjustable in 0.01 dB increments
End Threshold Setting	1.0 dB to 25.0 dB Adjustable in 0.1 dB increments	1.0 dB to 25.0 dB Adjustable in 0.1 dB increments
Units of Measure	m, ft	m, ft

13. dB variation per 1 dB step.
14. Applies along the trace backscatter within the distance range in which the OTDR can find a 0.1 dB event.

OptiFiber Pro OTDR Module Specifications (cont.)

	Multimode	single-mode
Test times per wavelength		
Auto	5 seconds (typical)	10 seconds (typical)
Quick Test	2 seconds (typical)	5 seconds (typical)
Best Resolution	2 to 180 seconds	5 to 180 seconds
FaultMap	2 seconds typical 180 seconds maximum	10 seconds typical 180 seconds maximum
Manual	3, 5, 10, 20, 40, 60, 90, 120, 180 seconds	3, 5, 10, 20, 40, 60, 90, 120, 180 seconds
Laser classification	Class I CDRH Complies with EN 60825-2	Class I CDRH Complies with EN 60825-2
Real Time Trace Refresh Rate	2 updates per second typical	2 updates per second typical

OptiFiber Pro DataCenter OTDR Specifications

	Multimode	single-mode
Pulse Widths (nominal)	3 ns	3 ns to 30 ns
Maximum Range	1.2 km (3979 ft)	5 km (16,404 ft)
Averaging Time	Automatically set to **Best Resolution**	
Target Test Times	850 nm: 1 second 1300 nm: 7 seconds	1310 nm and 1550 nm: 20 seconds
Maximum Test Times	850 nm: 7 second 1300 nm: 20 seconds	1310 nm and 1550 nm: 40 seconds
End Threshold	4.5 dB	3.5 dB

OptiFiber Pro HDR OTDR Module Specifications

Specifications apply at 1310 nm unless otherwise specified.

OTDR Port	SC standard Cleanable and interchangeable APC polish
Wavelengths	1310 nm ±25 nm 1490 nm, 1550 nm, 1625 nm ±20 nm
Emitter Type	Fabry-Perot laser diode
Spectral Width	<12 nm
Compatible Fiber Types	single-mode fiber
Event Dead Zone[1]	0.7 m typical
Attenuation Dead Zone[2]	4 m typical
PON Dead Zone[3]	30 m typical
Dynamic Range (typical)[4, 5]	1310 nm: 42 dB 1490 nm, 1550 nm: 41 dB 1625 nm: 40 dB

1. Measured at 1.5 dB below non-saturating reflection peak (-50 dB typical) using 5 ns pulse width.
2. Measured at ±0.5 dB beyond backscatter (< -50 dB), using 5 ns pulse width, excluding dispersion.
3. At 1310 nm, non-reflective fiber under test, non-reflective splitter, 13 dB loss, 50 ns pulse width, measured ± 0.5 dB beyond backscatter.
4. Backscatter coefficients (based upon ITU-T G.652.D compliant SMF-28e+): -77 dB at 1310 nm, -82 dB at 1550 nm.
5. Using 20 µs pulse. SNR=1 method, 3 minute averaging, 100 km fiber length

OptiFiber Pro HDR OTDR Module Specifications (cont.)

Maximum Distance to Event[6, 7, 8]	1310 nm: 100 km 1490 nm: 135 km 1550 nm: 160 km 1625 nm: 135 km
Maximum Distance to Noise[6, 7, 9]	1310 nm: 120 km 1490 nm: 170 km 1550 nm: 200 km 1625 nm: 170 km
Maximum Distance to UPC End[6, 7, 10]	1310 nm: 150 km 1490 nm: 215 km 1550 nm: 260 km 1625 nm: 220 km
Maximum Range Setting[11]	260 km
Distance Measurement Accuracy	±1 ±(0.00005 x distance) ±(0.5 x resolution) ± (index of refraction error) ± (event location error) meters typical
Linearity[12]	±0.03 dB/dB typical maximum
Reflectance Range	-14 dB to -70 dB

6. Fiber attenuation coefficients (based upon ITU-T G.652.D compliant SMF-28e+): 0.35 dB/km at 1310 nm, 0.24 dB/km at 1490 nm, 0.20 dB/km at 1550 nm, 0.23 dB/km at 1625 nm.
7. Backscatter coefficients (based upon ITU-T G.652.D compliant SMF-28e+): -77 dB at 1310 nm, -82 dB at 1550 nm.
8. Typical maximum distance for detecting 0.1 dB non-reflective event.
9. Typical maximum distance until backscatter falls into the noise floor (SNR=1).
10. Typical maximum distance for detecting a UPC end event.
11. Maximum setting for the SmartLoop OTDR test is 60 km for single-mode.
12. Applies to the initial 21 dB of signal, excluding the first 1 dB, using a 3000 ns pulse width.

OptiFiber Pro HDR OTDR Module Specifications (cont.)

Reflectance Accuracy[13]	±2 dB typical maximum
Sample Resolution[14]	3 cm to 2 m
Sampling Points	Up to 129,000
Pulse Widths (nominal)	5, 10, 30, 50, 100, 300, 500, 1000, 3000, 5000, 10000, 20000 ns
Loss Threshold Setting	0.01 dB to 1.5 dB Adjustable in 0.01 dB increments
End Threshold Setting	1.0 dB to 30.0 dB Adjustable in 0.1 dB increments
Units of Measure	m, ft
Test times per wavelength	
Auto OTDR	5 seconds/wavelength (typical)
Auto PON OTDR	10 seconds/wavelength (typical)
Quick Test	3 seconds/wavelength (typical)
Best Resolution	5 to 180 seconds/wavelength
FaultMap	10 seconds typical; 180 seconds maximum
Manual	3, 5, 10, 20, 40, 60, 90, 120, 180 seconds/wavelength
Laser classification	Class I CDRH, Complies with EN 60825-2 3rd Edition
Real Time Trace Refresh Rate	0.3 seconds (typical)
Minimum Power for Live Fiber Detection	-40 dBm at 1310 nm
Maximum Live Fiber Input Power	+10 dBm continuous wave or data

13. Applies along the trace backscatter within the distance range in which the OTDR can find a 0.1 dB non-reflective event.
14. Does not apply to the Real Time Trace.

OptiFiber Pro HDR DataCenter OTDR Specifications

Pulse Widths (nominal)	3 ns to 30 ns
Maximum Range	5 km (16,404 ft)
Averaging Time	Automatically set to **Best Resolution**
Target Test Times	1310 nm and 1550 nm: 20 seconds
Maximum Test Times	1310 nm and 1550 nm: 40 seconds
End Threshold	3.5 dB

Visual Fault Locator

On/off control	Mechanical switch and a button on the touchscreen
Output power (into SM fiber with SC/UPC connector)	316 µw (-5 dBm) ≤ peak power ≤ 1.0 mW (< 0 dBm)
Operating wavelength	650 nm nominal
Spectral width (RMS)	± 3 nm
Output modes	Continuous wave and pulse mode (2 Hz to 3 Hz)
Connector adapter	2.5 mm universal
Laser safety	Class II CDRH over operating temperature range Complies to EN 60825-2

FI-1000 Video Probe

Resolution	2 M pixels
Light source	Blue LED
Connection to OptiFiber Pro tester	USB type A plug
Power source	Power supplied by the main unit
Field-of-view (FOV)	Horizontal: 425 µm Vertical: 320 µm
Minimum detectable particle size	<0.5 µm
Dimensions	Approximately 6.75 in long x 1.5 in diameter (1175 mm x 35 mm) without adapter tip
Weight	7 oz. (198 g)
Temperature range	Operating: 32 °F to 122 °F (0 °C to +50 °C) Storage: -4 °F to +158 °F (-20 °C to +70 °C)
Certifications	CE (when used with the main unit)

FI-3000/FI-3000-NW Video Probe

Battery	Lithium-ion, 3.6 V, 6400 mAh
AC power adapter	
Input	100 VAC to 240 VAC ±10 %, 50/60 Hz
Output	15 VDC, 2 A maximum, Class II

Temperature	
Operating	-10 °C to 45 °C (14 °F to 113 °F)
Storage	-10 °C to 60 °C (14 °F to 140 °F)
Charging	0 °C to 40 °C (32 °F to 104 °F)
Relative Humidity	
Operating	0 % to 95 % (32 °F to 95 °F, 0 °C to 35 °C) RH non-condensing
Storage	0 % to 95 % (95 °F to 113 °F, 35 °C to 45 °C) RH non-condensing
Altitude	
Operating	4000 m (3200 m with AC adapter)
Storage	12 000 m
Vibration and Shock	2 g, 5 Hz to 500 Hz, 30 g shock
Live image frame size	~1200 x 400, 10 fps
Live image field of view	
Low magnification	4800 µm x 2000 µm
High magnification	985 µm x 1310 µm
Auto focus time	≤3 seconds
Connectors inspected	1 x 8 (8 fibers), 1 x 12 (8, 10, or 12 fibers), 1 x 16 (16 fibers), 2 x 12 (16, 20, or 24 fibers), 2 x 16 (32 fibers)
Test time	<2 seconds per fiber
Camera type	5 MP 1/4-inch CMOS sensor
Field of view	610 µm x 460 µm
Resolution	1 µm
Light source	LED, >100 000 hour life
Endface illumination	Coaxial blue LED

PortBright illumination	White LED
Dimensions	168 mm x 137 mm x 54 mm (6.625 in x 5.375 in x 2.125 in) (with no dust cap or adapter tip) Length with dust cap: 191 mm (7.5 in)
Weight	326 g (11.5 oz) (with dust cap and no adapter tip)
Wireless radio	
Frequency	2400 MHz to 2483.5 MHz
Output power	<100 mW
For more information, go to www.flukenetworks.com/support/manuals, select the product name, then find *Radio Frequency Data for Class A* in the list of manuals.	

Traceable Calibration Period

To make sure that the modules operate within the published specifications for accuracy, have them calibrated at a Fluke Networks authorized service center every 12 months.

Internal Memory Capacity for Test Results

Typical capacity for the internal memory depends on the type of tests you save and the version of the main tester you use:

The capacity available for test results also depends on the space used by the software and custom test limits in the tester.

The number of test records you can save decreases if you save more tests in each record, or if you save tests that use more memory. For example, twisted pair results saved with plot data use more memory than results without plot data.

USB Flash Drive

You can upload test results to a USB flash drive to make more internal memory available.

Note

The tester reads only USB drives that use the FAT format.

Serial Interfaces

- USB host interface with a type A USB port: Lets you save test results on a USB flash drive, connect the FI-1000 video probe to the tester, and connect a Wi-Fi adapter for access to Fluke Networks cloud services such as LinkWare™ Live.
- USB interface with a Micro USB port: Lets you connect to a PC to upload test results and update the tester's software.

RJ45 Connector on the Main Unit

Lets you connect to a network for access to Fluke Networks cloud services such as LinkWare™ Live.

Headset Jack

Connects to a stereo headset, 32 Ω, with microphone, 22 Ω, and 3.5 mm plug. See Figure 223.

Display

5.7 in LCD display with a projected capacitance touchscreen.

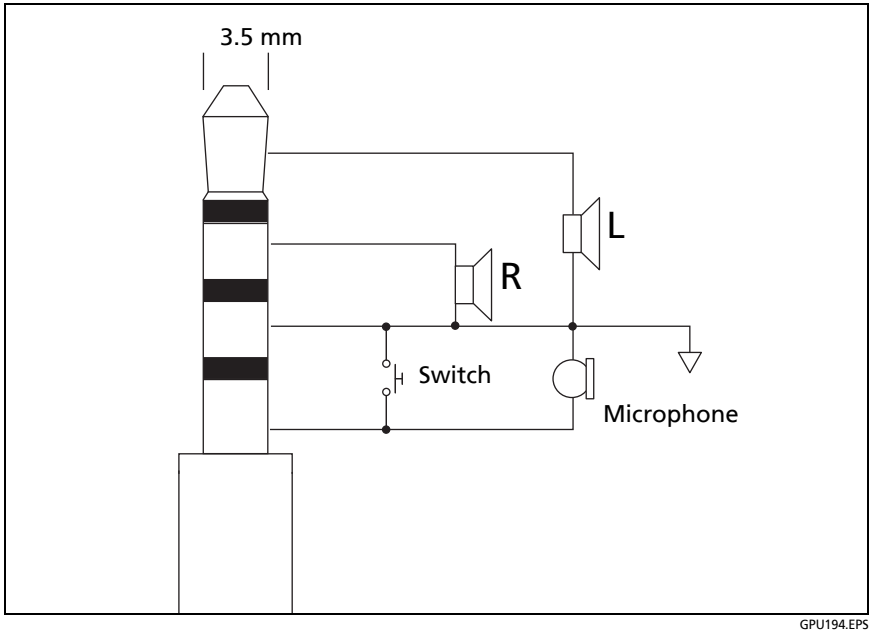

Figure 223. Plug for the Headset Jack

Wi-Fi Connectivity

Versiv

Versiv main testers use an external wi-fi adapter. These adapters are supported:

- TP-LINK TL-WN725N, Versions 1 and 2 (recommended)
- NETGEAR WNA1000M

Other adapters may be suitable. For the latest list of qualified adapters, see this topic in the Fluke Networks Knowledge Base:

www.bit.ly/1ACJeFO

Versiv 2 Wireless Radio

Frequency Range	Output Power
2412 MHz to 2484 MHz 4910 MHz to 5825 MHz	<100 mW

China Only

Radio Module	Frequency Range	Output Power
WLAN	2400 MHz to 2483.5 MHz 5150 MHz to 5350 MHz 5725 MHz to 5850 MHz	≤20 dBm (EIRP) ≤23 dBm (EIRP) ≤33 dBm (EIRP)
Bluetooth®	2400 MHz to 2483.5 MHz	≤20 dBm (EIRP)

Note

The testers in some custom kits do not support Wi-Fi (for example, in some kits purchased for government applications). These testers do not show any Wi-Fi settings.

Meets IEEE 802.11a/b/g/n; dual band (2.4 GHz and 5 GHz)

To see the regulatory information for the tester's Wi-Fi radio

On the home screen, tap **TOOLS**, then tap **Regulatory Information**.

For more information, go to **www.flukenetworks.com/support/manuals**, select the product name, then find "Radio Frequency Data for Class A" in the list of manuals.

Weights

Main tester	2 lb 4.5 oz (1.03 kg)
Remote tester	1 lb 11.5 oz (780 g)
DSX CableAnalyzer module	11.2 oz (318 g)
CertiFiber Pro Quad OLTS module	1 lb 0.7 oz (473 g)
OptiFiber Pro Quad OTDR module	1 lb 0.3 oz (462 g)
OptiFiber Pro HDR OTDR module	14 oz (398 g)

Dimensions

Main or remote tester with DSX module and battery installed	10.2 in x 5.2 in x 2.5 in (26.0 cm x 13.2 cm x 6.4 cm)
Main or remote tester with CertiFiber Pro or OptiFiber Pro module installed	11.1 in x 5.2 in x 2.5 in (28.2 cm x 13.2 cm x 6.4 cm)

Appendix A: Tests on Long Fiber Links with the OptiFiber Pro OTDR

The OptiFiber Pro OTDR can do tests on multimode links up to 35 km and on single-mode links up to 130 km at 1550 nm. This appendix gives information on how to set up the tester and select launch cords to do OTDR tests on links longer than approximately 27 km.

Make a Custom Fiber Type, If Necessary

If the list of fiber types in the tester does not include the fiber type used in the link, make a custom fiber type. For instructions on how to make a custom fiber type, see Chapter 19.

Get these values from the manufacturer of the fiber:

- Index of refraction: This setting affects the length measurement. It is important to have the correct value for the fiber when you do tests on long fibers.
- Backscatter coefficient: This setting affects reflectance and optical return loss measurements.

Use a Launch Cord of the Correct Type

Select a launch cord that has properties that are similar to the link. If the launch cord is not similar, the OTDR will show loss measurements that are higher or lower that the actual loss of the link. This can cause a “gainer” in the test results from one direction.

If the launch cord is similar to the fiber in the link, but you still see a difference in the backscatter from the fibers, you can use LinkWare PC software to do bi-directional averaging.

Use a Launch Cord of the Correct Length

To do an OTDR test on a long fiber, the tester uses wider pulse widths to increase dynamic range. Wider pulse widths make wider dead zones, which can hide the first connector and the fiber at the near end of the link.

To make sure you see measurements for the near end of the link, use a launch cord that is longer than the dead zone. Table 27 shows examples of minimum lengths of launch cords for typical links.

Table 27. Minimum Length of a Launch Cord

Maximum Length of Link (km)		Typical Pulse Width (ns)	Minimum Launch Cord Length (meters)*
1310 nm	1550 nm only		
0 to 35	0 to 50	≤1000	160
35 to 45	50 to 65	3000	400
45 to 50	65 to 75	10000	1000
≥ 50	≥ 75	20000	2400

* For fiber with typical attenuation (≤ 0.35 dB/km at 1310 nm; ≤ 0.2 dB/km at 1550 nm) and event loss less than 0.8 dB.

Use a Launch Cord that Has the Correct Connectors

One end of the launch cord must have the same type of connector as the OTDR. The other end must have the same type of connector and polish as the link. Do not use hybrid patch cords to connect launch cords to the OTDR or to the link.

An exception is the bi-directional SmartLoop test. For these tests, you move the OTDR connection from the launch cord to the tail cord halfway through the test. To decrease wear on the OTDR connector and help keep it clean, use the short patch cord

provided to connect the launch and tail cords to the OTDR port. See “How to Do a Bi-directional SmartLoop Test” on page 406.

To minimize the effect of the port protector patch cord on results, do not use a cord longer than 50 cm (20 in).

Use the Correct Test Limit

Make sure that the limit you select does not have a length limit that is too short for the link.

Note

For more information and updates on how to do tests on long links, see the Fluke Networks Knowledge Base.

For Tests on OSP Links

For tests on long, single-mode outside plant links, use the OptiFiber Pro HDR OTDR module. A typical maximum test range for the HDR OTDR is 260 km for a link with no splitters. This OTDR can also identify splitters that are used in PON (passive optical network) installations.

Appendix B: Reference Method Names

Industry standards use different names for the three reference methods. Tables 28 and 29 show the names used in this manual and by four common standards.

Table 28. Reference Method Names for TIA Standards

Link End Connections Included in Loss Results	Method Name in This Manual	TIA-526-14-C (multimode)	TIA-526-7-A (single-mode)
2 connections	1 Jumper	One-Cord Reference Method (was Method B)	One-Cord Reference Method (was Method A1)
1 connection	2 Jumper	Two-Cord Reference Method (was Method A)	Two-Cord Reference Method (was Method A2)
None	3 Jumper	Three-Cord Reference Method (was Method C)	Three-Cord Reference Method (was Method A3)

Table 29. Reference Method Names for IEC Standards

Link End Connections Included in Loss Results	Method Name in This Manual	IEC 61280-4-1 (multimode)	IEC 61280-4-2 (single-mode)
2 connections	1 Jumper	One-Cord Reference Method (was Method 2)	One-Cord Reference Method (was Method A1)
1 connection	2 Jumper	Two-Cord Reference Method (was Method 1)	Two-Cord Reference Method (was Method A2)
None	3 Jumper	Three-Cord Reference Method (was Method 3)	Three-Cord Reference Method (was Method A3)

Appendix C: Reference Methods for Fiber Cabling

Introduction

Notes

The following discussion uses the 1, 2, and 3 jumper terminology for the names of the three common test methods. See Appendix B for a cross-reference of the method names in various standards.

The number of fiber connections represented in loss test results depends on how many test reference cords you use to set the reference. This appendix describes the three common reference methods: 1, 2, and 3 jumper.

Use the **Reference Method** setting on the tester's **TEST SETUP** screen to select the method you will use. This setting does not change the loss measurements, but it can change the **PASS/FAIL** result for test limits that use a calculated loss limit. For all test limits, the tester saves this setting to show the reference method you used.

1 Jumper Reference

For a 1 jumper reference, you use 1 test reference cord in each fiber path when you set the reference, as shown in Figure C-1. Loss results for the 1 jumper reference method include both connections plus the fiber in the link. This method is suitable for testing premises fiber, where patch cords are typically used at both ends of the link and connector loss is a significant portion of the total loss. Appendix B shows the names of the standards that define the 1 jumper method.

Industry standards specify the 1 jumper reference method for testing multimode and single-mode premises fiber, where connector loss is a significant portion of the total loss.

Note

Other methods are available for getting jumper results when you do not have the correct connector adapters for the tester. See "Modified 1 Jumper Reference" on page 682. For additional methods, see the Fluke Networks Knowledge Base.

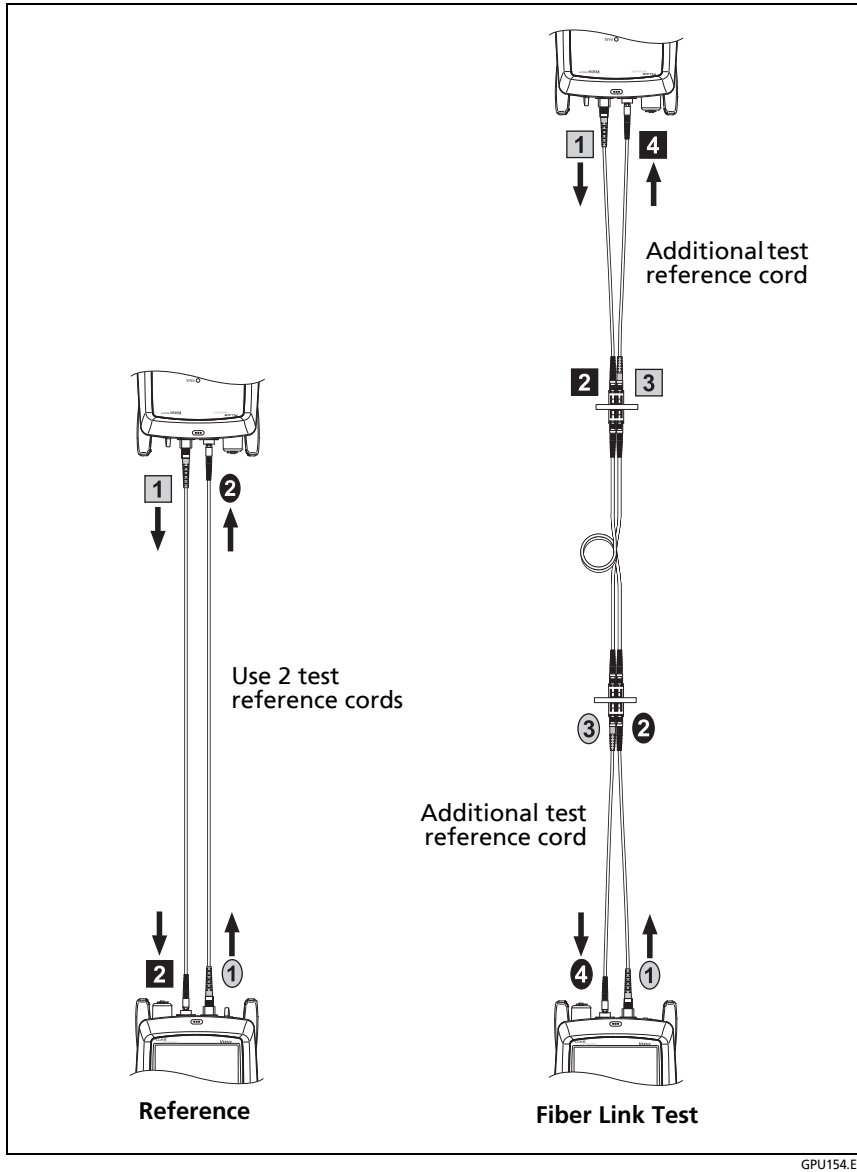

GPU154.EPS

Figure C-1. 1 Jumper Reference and Test Connections (single-mode shown)

2 Jumper Reference

For a 2 jumper reference, you use 2 test reference cords in each fiber path when you set the reference, as shown in Figure C-2. The test connections add one connection, plus the fiber in the link, to each path. Loss results for the 2 jumper reference method therefore include only one connection plus the fiber in the link. This method is suitable for links where one end is connected directly to the active equipment. Appendix B shows the names of the standards that define the 2 jumper reference method.

Because the results omit one connection, industry standards do not recommend the 2 jumper reference method for testing premises fiber, where patch cords are typically used at both ends of a link and connector loss is a significant portion of total loss.

Note

If you use a **2 Jumper** *reference, the Wizard for the reference procedure does not show steps for the TRC verification. To save test results for the TRCs, do the tests manually.*

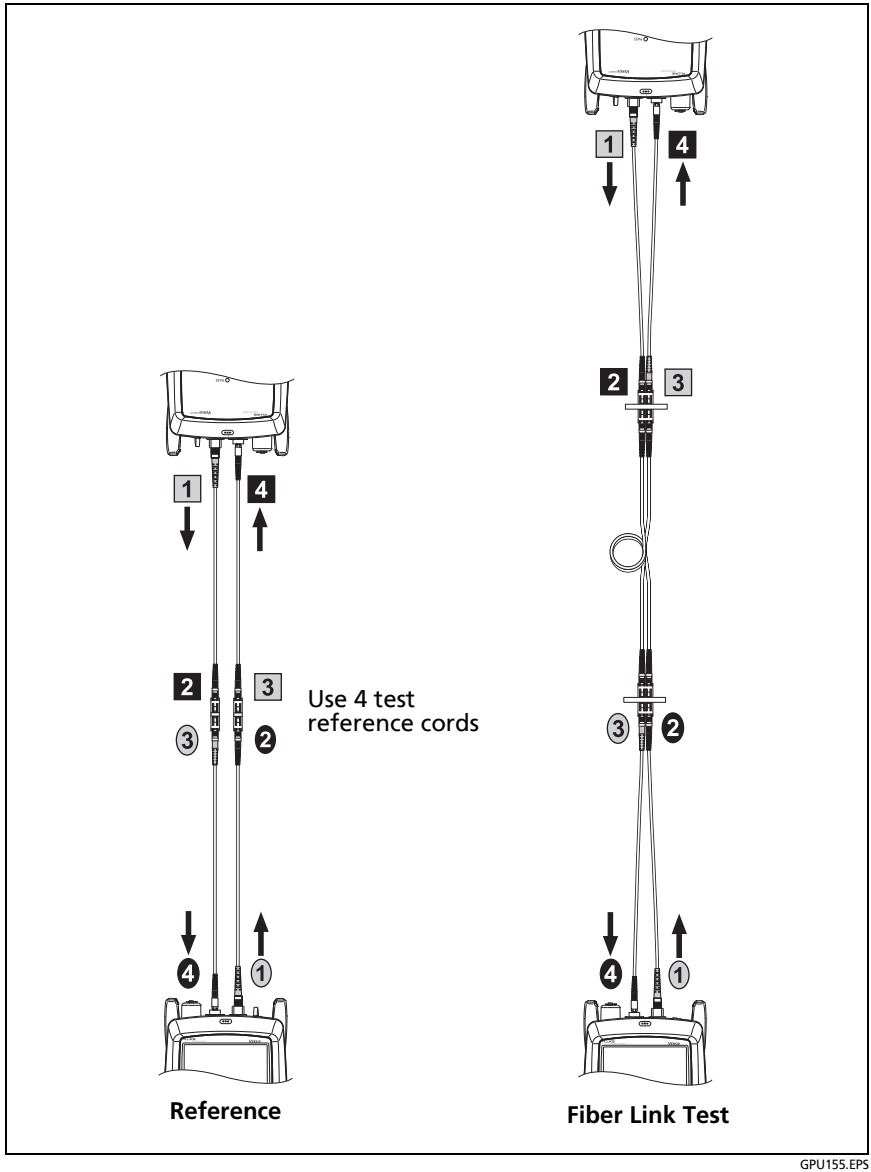

Figure C-2. 2 Jumper Reference and Test Connections (single-mode shown)

3 Jumper Reference

For a 3 jumper reference, you use 3 test reference cords in each fiber path when you set the reference, as shown in Figure C-3. The test connections add only the fiber in link to each path. Loss results for 3 jumper reference method therefore include only the fiber in the link. Use this method to measure the loss of channels, where the patch cords for equipment are already connected. Also use it for tests on trunk cables that have MPO connectors at both ends.

Appendix B shows the names of the standards that define the 3 jumper reference method.

Because the results omit both connections in the link, industry standards do not recommend the 3 jumper reference method for testing premises fiber, where patch cords are typically used at both ends of the link and connector loss is a large portion of the total loss.

Note

When you use the CertiFiber Pro Wizard to verify your test reference cords for the 3 jumper reference method, you must set the reference twice. The first time is for the test on the TRCs, and the second time is for tests on the fiber links.

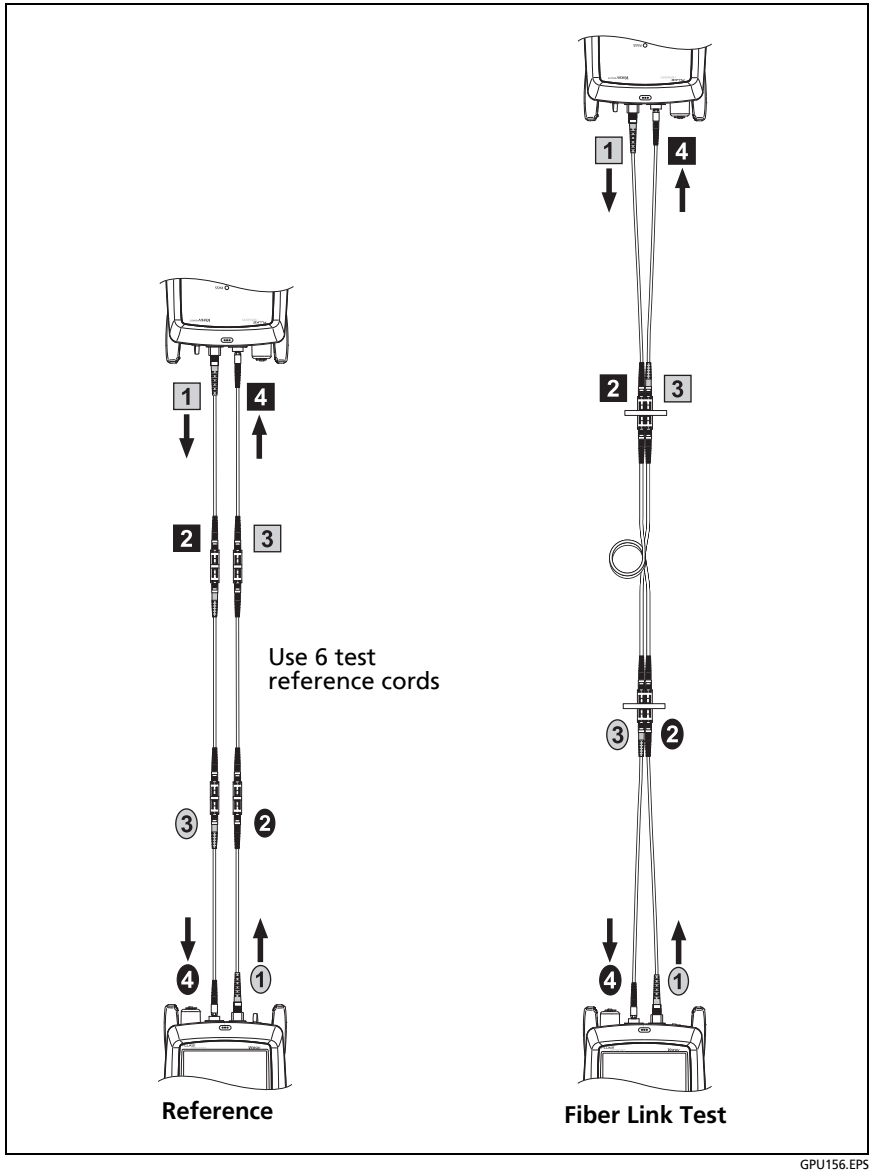

Figure C-3. 3 Jumper Reference and Test Connections (single-mode shown)

Modified 1 Jumper Reference

This section shows modified reference and test connections that give 1 jumper results. Use these connections if you need 1 jumper results, but do not have the correct connector adapters to connect the CertiFiber Pro modules' output ports to the link. This method lets you keep the test reference cords connected to the module's output ports when you connect the modules to the link.

Figure C-4 shows reference and test connections for a fiber with MT-RJ connectors.

On the tester select **1 Jumper** as the **Reference Method** when using modified 1 Jumper connections.

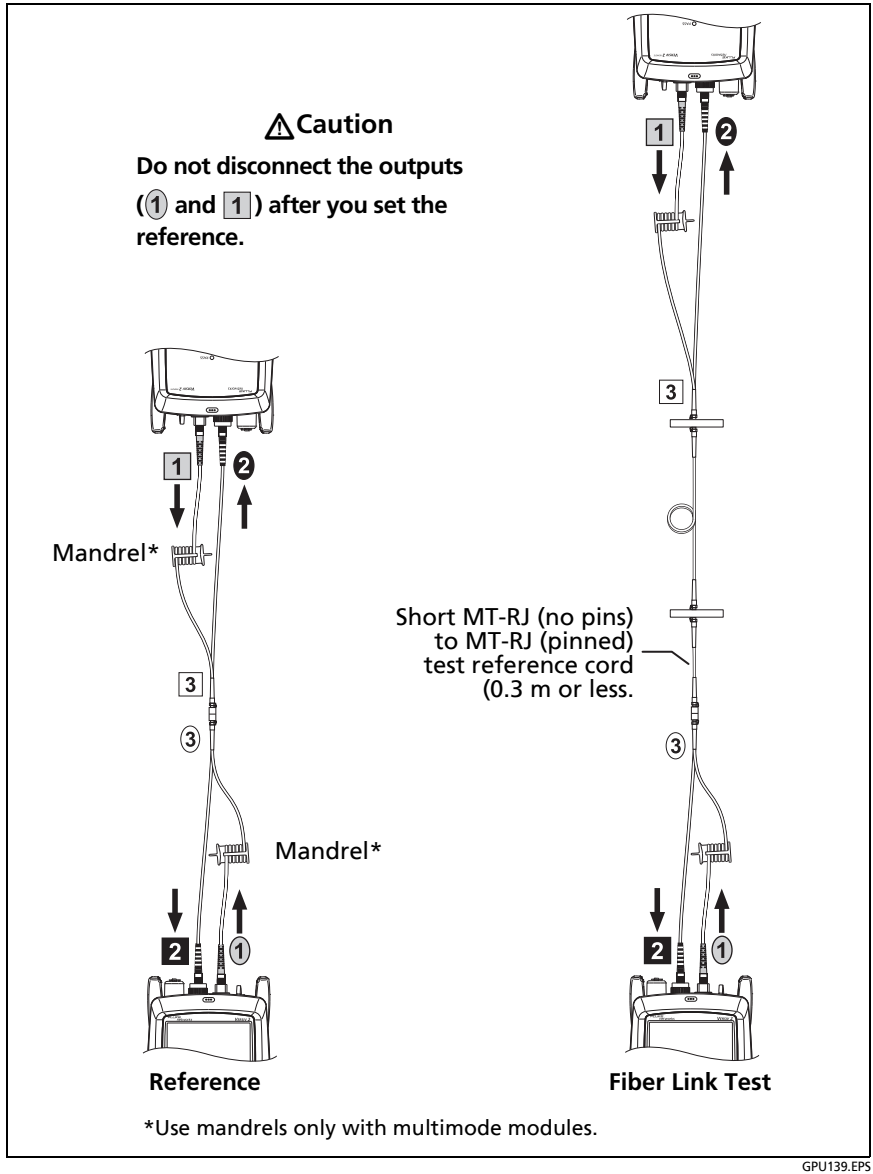

Figure C-4. Modified 1 Jumper Reference and Test Connections for Smart Remote Mode

Index

Symbols

* in results, 101
% Tested, 262
  copper tests, 81
  OTDR tests, 330, 427
+All in test limits, 139
< > (in OTDR results), 359, 379, 381, 449, 470

–1–

1 jumper reference
  modified, 682
  standard, 278, 676
1, 2, 3 jumper setting, 273
10 % rule, 109, 193
12 dB rule, 155

–2–

2 jumper reference, 678

–3–

3 dB rule, 155
3 jumper reference, 680

–4–

4 dB rule, 155

–6–

62 dB rule, 156
67 dB rule, 156

–7–

70 dB rule, 156

–A–

AC wire map
  setting, 88, 163
  test, 163
accessories, 630
ACR. *See* ACR-N.
ACR-F
  causes of failures, 195
  results, 133
ACR-N
  causes of failures, 195
  results, 129
adapters for DSX modules. *See* link interface adapters.
alien crosstalk, 161
All (in test limit), 139
alternate ID, 596
APC connectors
  cleaning, 214
  event table, 369, 459
  FaultMap, 413, 485
  in ORL measurements, 376, 467
  launch compensation, 348, 349
  launch/tail cords, 341
  manual entry (APC), 342
  OTDR trace, 530

test reference cords, 269
asset management feature, 593
asterisk in results, 101
attenuation coefficient
OTDR custom limit, 609
OTDR result, 378, 469
attenuation. *See* insertion loss.
audible tone, 34
auto CertiFiber/SimpliFiber Pro
far end source mode, 301
power meter, 319
auto length, 392, 480
auto OTDR, 332, 430, 431
auto save, 67
auto wavelength
far end source mode, 301
light source, 322
OTDR (real time trace), 393, 481
power meter, 319
automatic increment, 66
Autotest
asterisk in results, 101
coaxial, 173
coaxial settings, 171
count, 618
failures
loss/length, 524
twisted pair, 189
far end source mode, 301
loopback mode, 294
loss/length settings, 271
results
coaxial, 176
far end source mode, 308
loopback mode, 299
smart remote mode, 286
twisted pair, 99
smart remote mode, 280
twisted pair, 90
averaged bi-directional results, 410, 504
averaging time, 335
AxTalk, 161

–B–

backlight timer, 33
backscatter
custom fiber type, 605
different values in a link, 529
OTDR setting, 338, 438
bad patch cord, 96
balance measurements
about, 137
select balance measurements, 139
battery
care, 624
removal, 625
storage, 624
bend
event, 369, 459
event details, 380
bi-directional
averaged results, 410, 504
IDs for loss/length results, 293
loss/length setting, 272
OTDR test on single fiber, 389,

477
patch cord test, 87
results, 410, 504
SmartLoop test, 404, 498
SmartLoop test setting, 337, 436
why do bi-directional OTDR tests, 404, 498

–C–

cable ID. *See* ID set.
cable type
coaxial, 172
twisted pair, 85, 87
calculated loss limit
far end source mode, 310
loss/length test, 271
OTDR test, 339, 439
calibration date, 618
calibration dates, 618
cautions, 11, 267
CDNEXT
causes of failures, 196
results, 148
change ID screen
smart remote mode, 292
twisted pair and single fibers, 556
change project screen, 576
change test, 561
channel
connections, Cat 8/Class I/II, 95
connections, up to Cat 7A, 94
characteristic impedance
coaxial, 180
twisted pair, 124
check fiber connections
far end source mode, 308
loopback mode, 298
smart remote mode, 285
cleaning
case, 616
fiber connectors, 211
Quick Clean cleaner, 214
touchscreen, 616
video probe, 616
cloud icon with project name, 592
cloud services, 542, 586, 587
CMRL, 146
coaxial
custom cable, 599
failures, 196
reference, 169
results, 176
settings, 171
splitters, 183
test, 173
tests without a remote, 184
common-mode signals, 137
compensate for launch/tail cords, 342
connections
channel, Cat 8/Class I/II, 95
channel, up to Cat 7A, 94
MPTL, 98
permanent link, Cat 8/Class I/II, 95
permanent link, up to Cat 7A, 93
connector
adapters on OLTS modules, 258
adapters on OTDR modules, 327,

423
APC.See APC connectors.
bad connector on HDTDX plot, 207
CertiFiber Pro module, 253
DSX CableAnalyzer module, 73
loss/length custom limit, 608
OptiFiber Pro module, 324, 422
OTDR connection quality, 352, 441
remote Versiv Unit, 16
VFL, 522
connector loss
loss/length custom limit, 608
OTDR custom limit, 610
connector type, 274
core
different sizes in a link, 529
crossed pairs
ac wire map, 168
causes, 192
wire map, 107
current series, 618
cursor
copper test results plot, 117
HDTDR/HDTDX plots, 208
OTDR trace, 384, 474
custom copper cable type, 599
custom fiber type, 603
custom outlet configuration, 602
custom test limit
FiberInspector test, 611
loss/length test, 608
OTDR test, 610

–D–

DataCenter OTDR test, 332, 431
date, 32
dB rules, 153
decimal separator, 33
default project, 69
defects (FiberInspector setting), 611
delay skew
causes of failures, 193, 197
results, 110
diagnostic tab
coaxial results, 177
twisted pair results, 153
differential-mode signals, 137
display
brightness, 35
cleaning, 616
use the touchscreen, 23
document only (test limit), 339, 438
DSX modules/adapters compatibility, 645
DSX-8000/DSX-5000 modules
adapter compatibility, 645
adapter connector, 78
DSX-PLA/CHA804, 78
DSX-PLA004 replacement tip, 626

–E–

echo. See ghost.
EF-TRC, 267
ELFEXT. *See* ACR-F.
ELTCTL
causes of failures, 196

results, 152
encircled flux, 267
end 1/end 2
change the number, 557
enter names, 557
far end source mode, 307
merge far end source mode results, 308
power meter, 317
end event, 370, 460
End Not Found, 185
end threshold, 335
error message, 629
Ethernet connection for LinkWare Live, 588
event details, 377, 468
event table, 364, 454
event types, 368, 457
EventMap, 360, 363, 450

–F–

FAIL
coaxial test failures, 196
loss/length test failures, 524
OTDR test failures, 526
twisted pair test failures, 191
FAIL*, 101
far end source mode, 301
fault info tab, 100, 189
FaultMap test
procedure, 414, 486
purpose, 333, 413, 431, 485
screen, 417, 489
FEXT, 133
fiber type
custom settings, 605
invalid, 629
loss/length setting, 272
OTDR setting, 338, 437
FiberInspector test
custom limit, 611
fix later, 64
fixed length, 393, 481
flash drive
projects, 585
results, 538
flash drive for test results, 538

–G–

gainer
example on OTDR trace, 529
in the event table, 372, 462, 463
general connector type, 274
general fiber (OTDR test limit), 339, 438
ghost
event, 371, 461
example on OTDR trace, 530
ghost source event, 371, 462

–H–

HDTDR analyzer, 198
coaxial, 202
twisted pair, 200
HDTDR/HDTDX
setting, 87
tools menu, 198, 204
HDTDX analyzer, 204

hidden end event, 370, 460
home screen
CertiFiber Pro, 260
DSX CableAnalyzer, 79
no module attached, 26
OptiFiber Pro, 328

–I–

i
far end source mode, 310
OTDR event table, 367, 457
TRC verification result, 266
twisted pair test results
dB rules, 153
resistance, 114
ID set
copy, 547
delete from a project, 547
make an ID set, 67
next ID, 581
options, 65
setup screen, 554
IDs untested, 557
impedance, 124
coaxial, 180
index of refraction
in custom fiber type, 605
loss/length setting, 273
OTDR setting, 338, 438
OTDR tests on long fibers, 669
insertion loss
causes of failures, 194, 197
coaxial, 182
twisted pair, 120
IP address, 617

–J–

jumper setting, 273

–K–

keyboard, 30

–L–

language, 32
launch compensation
about launch and tail cords, 340
launch/tail cord connectors, 341
methods, 342
screen for OTDR test, 347
screen for SmartLoop test, 59
turn on or off, 337, 437
virtual events, 349
launch/tail events, 368, 458
length
coaxial, 178
continuous test, 187
index of refraction
custom fiber type, 605
loss/length setting, 273
OTDR setting, 338, 438
loss/length
custom limit, 608
used to calculate a loss limit, 271
OTDR
custom limit, 609
results, 362, 454

used to calculate a loss limit, 339, 439
single test, 114
twisted pair
causes of failures, 193
results, 109
link interface adapters
about, 76
compatibility with DSX modules, 645
DSX-5000 and DSX-8000, 78
standard for DSX-5000, 640
standard for DSX-8000, 634
LinkWare Live
asset management feature, 593
software updates, 623
Wi-Fi connection, 589
wired connection, 588
LinkWare PC and LinkWare Stats, 38
long-range communication mode, 161, 641
loopback mode, 294
loss budget
calculated, 272
loss budget (loss/length custom limit), 608
loss event, 369, 459
editing, 507
loss is negative, 265
loss threshold, 336, 434, 435
loss type (loss/length custom limit), 608
loss/km (loss/length custom limit), 609
loss/length
bi-directional tests, 311
causes of test failures, 524
custom limit, 608
far end source mode, 301
loopback mode, 294
reference, 264
settings, 271
smart remote mode, 280
test reference cords, 266

–M–

MAC address, 588
macrobend detection, 337, 437
main tester
features, 14
manual OTDR
quickly try different settings, 387
TEST SETUP settings, 333
manual PON OTDR
quickly try different settings, 472
MEASURE button
coaxial Autotest, 174
twisted pair Autotest, 92
memory
capacity, 541, 665
flash drive
projects, 585
results, 539
status, 541
upload results to a PC, 539
view results, 531
module
CertiFiber Pro, 253

coaxial settings, 172
DSX, 73
install or remove, 36
loss/length settings, 272
OptiFiber Pro, 324, 421
OTDR settings, 332
PON OTDR settings, 430
twisted pair settings, 85
MPO modules
custom limit, 608
total connections, 276
MPTL (Modular Plug Terminated Link), 97

–N–

N/A
custom limit, 610
in LinkWare PC results, 153
OTDR port, 368, 458
OTDR results
end event, 370, 460
limit, 378, 469
margin, 378, 469
overall loss, 362, 454
segment attenuation, 378, 469
twisted pair results
length, 112
LinkWare PC, 153
NEXT
causes of failures, 195
HDTDX analyzer, 204
results, 126
next ID, 581
no fiber event, 373, 463
no signal event, 374, 464
number format, 33
number of connectors/splices
loss/length setting, 274, 275
OTDR setting, 340, 439
NVP
coaxial setting, 172
differences, 110, 178
twisted pair setting, 85

–O–

open
ac wire map, 167
causes on twisted pair, 191
far end source mode, 308
HDTDR plot, 201
loopback mode, 298
smart remote mode, 285
wire map, 105
operator, 28
LinkWare Live ID (email address), 588, 590
optical return loss, 376, 467
custom limit, 609
optical source for far end source mode, 301
optical source in CertiFiber Pro module
wavelengths, 305
optical source in CFP module
turn on the source, 306
options and accessories, 630
orange arrows in connection icon, 81,

161
OTDR
auto, 332, 430, 431
bi-directional
averaged results, 410, 504
SmartLoop test, 404, 498
test on single fibers, 389, 477
causes of test failures, 526
cursors on trace, 384, 474
custom limit, 610
edit loss event, 507
event details, 377, 380, 468
event table, 365, 455
event types, 368, 457
EventMap, 360, 363, 450
launch and tail cords, 340
launch and tail cords for OSP links, 440
manual, 333
overall fiber result, 375, 465
port connection quality, 352, 441
port event, 368, 458
quickly try different settings, 387, 472
real time trace, 392, 480
settings, 331, 429
SmartLoop test, 397, 491
span function, 511
trace, 383, 471
trace overlay screen, 383, 472
out of range event, 373, 464
outlet configuration, 87
custom, 602
overall fiber result, 375, 465
overall loss, 362, 412, 454, 506
loss/length custom limit, 609
OTDR custom limit, 609

–P–

P2P UBL, 140
PAIR UBL, 140
parts, 630
PASS*, 101
patch cord
See also test reference cords
bad patch cord
message, 96
on HDTDR plot, 201
on HDTDX plot, 207
certification, 96
in FaultMap test results, 413, 485
OTDR connection, 341
two limit lines, 116
performance tab, 108
permanent link
adapters, 76
connections, Cat 8/Class I/II, 95
connections, up to Cat 7A, 93
plots (coaxial)
store plot data, 172
plots (twisted pair)
black limit line, 153
description, 116
store plot data, 86
PoE
AC wire map setting, 88, 163
do tests through a PoE device, 163

test limit, 139
port connection quality, 352, 441
power meter, 315
power-down timer, 33
project
copy to another tester, 586
flash drive, 585
project screen, 544
purpose, 543
set up a project, 544
propagation delay
causes of failures, 193, 197
coaxial, 178
results, 178
twisted pair, 110
PS ACR-F
causes of failures, 195
results, 136
PS ACR-N
causes of failures, 195
results, 131
PS NEXT
causes of failures, 195
results, 127
PSACR. *See* PS ACR-N.
PSELFEXT. *See* PS ACR-F.
pulse width, 334

–R–

range, 333
real time trace
HDR OTDR
quickly try different settings, 483
quickly try different settings, 392, 395, 480
receive event, 368, 458
reference
far end source mode, 303
good values, 265
loopback mode, 295
smart remote mode, 280
twisted pair, 83
when to set
coaxial, 169
fiber, 264
twisted pair, 83
reference method, 273
reflectance (in custom limit), 610
reflection event, 368, 457
remote
orange arrows on connection icon, 81, 161
remote tester
battery status, 21
connectors, keys, LEDs, 16
LEDs, 17
optical source
turn on the source, 306
wavelengths, 305
version information, 617
replacement parts, 630
resistance
causes of failures, 192, 196
coaxial
continuous test, 187
results
coaxial, 179

twisted pair, 112
twisted pair
continuous test, 114
resistance unbalance, 140
between pairs, 144
in a pair, 140
results
add to a saved result, 535
delete, rename, move, 537
flash drive, 538
replace a saved result, 536
results screen, 532
table or plot, 115
upload to a flash drive, 538
upload to a PC, 539
return loss
causes of failures, 195
HDTDR analyzer, 198
results, 121
reversed pair
causes, 192
wire map, 107

–S–

scratches, 611
segment attenuation coefficient
OTDR custom limit, 609
OTDR result, 378, 469
self test, 615
serial number, 617
service, 628
settings
coaxial, 171
loss/length, 271
OTDR, 331, 428
twisted pair, 84
user preferences, 32
shield test, 86
short
ac wire map, 167
causes, 191
HDTDR plot, 201
wire map, 106
single tests, 114
smart remote mode, 280
tutorial, 45
SmartLoop test, 397, 491
bi-directional, 404, 498
do the test, 399, 406, 493, 500
results, 403, 497
settings, 333, 337, 431, 436
tutorial, 54
software
update, 619
version, 617
span function, 511
specifications
calibration, 664
CertiFiber Pro module, 651
certifications and compliance, 665
dimensions, 668
display, 666
DSX modules/adapters compatibility, 645
DSX series modules, 645
DSX-5000 module, 639

DSX-8000 module, 632
DSX-CHA003 coaxial adapter, 650
environmental and regulatory, 631
FI-1000 video probe, 662
headset jack, 666
memory, 665
OptiFiber Pro module, 654, 658
RJ45 connector, 665
serial interfaces, 665
tone generator, 645
VFL, 661
wi-fi, 667
splice
bi-directional OTDR test, 405, 499
EventMap, 363, 451
gainer
event table, 372, 462
OTDR trace, 529
loss/length custom limit, 608
OTDR custom limit, 610
real time trace, 392, 480
splices setting, 276
loss/length setting, 275
OTDR setting, 340, 439
split pair
causes, 192
HDTDX plot, 207
wire map, 106
splitters, 183
stop the manual OTDR test, 354, 442
storage, 624
store plot data
coaxial, 172
twisted pair, 86
sync projects screen, 594
system log, 628

–T–

tailing
example, 528
in attenuation measurement, 378, 469
talk
CertiFiber Pro modules, 314
DSX CableAnalyzer modules, 160
TCL
causes of failures, 196
results, 150
test limit
+All, 139
+PoE, 139
black limit line on plots, 153
coaxial setting, 172
loss/length setting, 273
OTDR setting, 339, 438
PoE, 139
twisted pair setting, 86
test reference cords
encircled flux, 267
length, 275
select compatible cords, 266
test setup
copy, 547
delete, 547
test type
loss/length setting, 272

PON OTDR setting, 431
time, 32
tone generator, 158
total connections setting, 274
touchscreen
cleaning, 24
use the touchscreen, 23
TRC length, 275
TRC verification, 266
twisted pair
See also Autotest
custom cable, 599
failures, 191
reference, 83
results, 99
settings, 84
test, 92
tutorial, 39

–U–

unbalance
impedance, 137
resistance, 140
units for length measurements, 33
Unknown
coaxial impedance test, 185

–V–

version information, 617
virtual events, 349
visual fault locator (VFL)
applications, 519
turn on the VFL, 522
use the VFL, 521

–W–

warnings
in loss/length test results, 290
in OTDR test results, 376, 466
maintenance, 615
wavelengths, 337, 437
weak signal event, 374, 464
Wi-Fi
connection for LinkWare Live, 589
delete settings and passwords, 595
regulatory information, 595, 667
settings for LinkWare Live, 594
specifications, 667
wire map
AC wire map
results, 163
setting, 88, 163
causes of failures, 191
results, 104
single test, 102
wired Ethernet
connection for LinkWare Live, 588
settings for LinkWare Live, 594

–Z–

zone diameter, 611