FLUKE®
Calibration

Y6270
Rack-Mount Kit

Instruction Sheet

Introduction

This sheet provides instructions to mount the 6270A Pressure Controller/Calibrator (the Product) in a standard 19.12-inch panel opening E.I.A. universal spacing equipment rack.

⚠ Warning

To prevent possible injury, do not restrict access to the Product power cord, which is the mains disconnecting device. If access to the mains power cord is inhibited by rack mounting, a properly-rated accessible proximate mains disconnecting switch must be provided as part of the installation.

Preparation

Before the rack-mount kit (the kit) is installed:

1. Remove the top and bottom screws from the sides of the front Product handles. Leave the center screws installed.
2. Remove the rear handles and slide out the center covers from the side extrusions.
3. Use the screws removed from the rear handles to install the handle caps.
4. Remove flat-head screws from side extrusion, two for each side.

   Additional handle caps are supplied if the front handles are not required due to rack configuration.

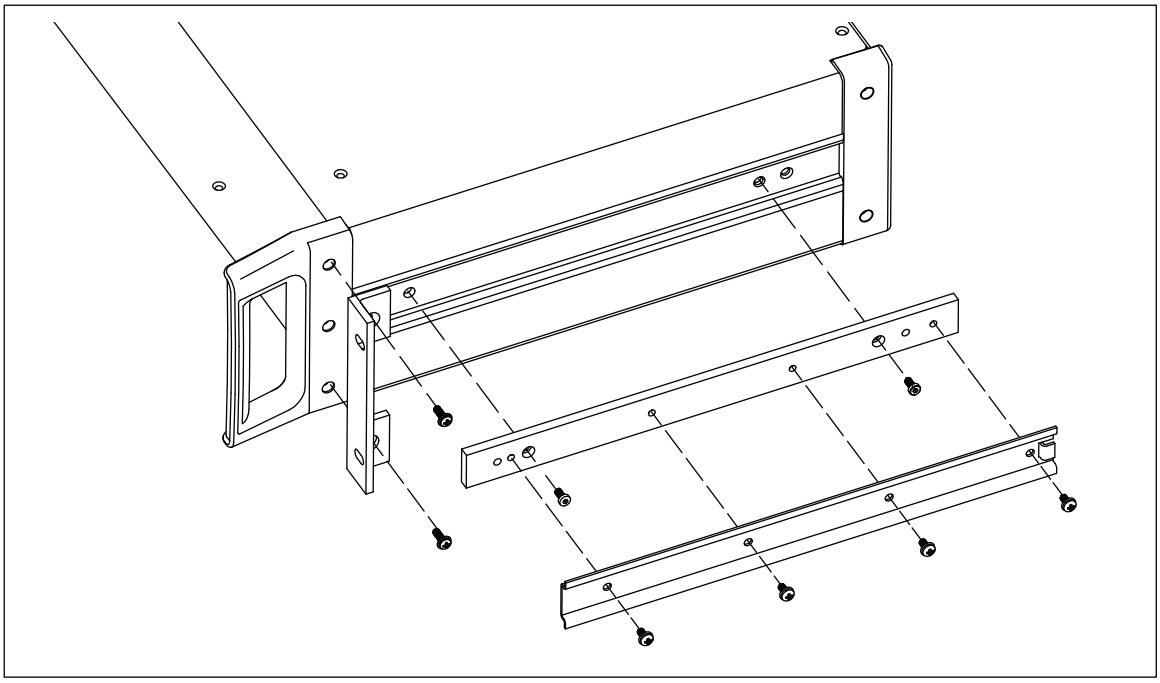

hvl002.eps

Figure 1. Attach the Hardware to the Product

 ©2014-2017 Fluke Corporation. All rights reserved.

Installation

For screw references, see Figure 4.
To install the kit:

1. Attach the rack ears to the Product with two M4 x 12 pan head screws for each ear (see Figure 1).
2. Install the filler bars on the sides of the Product with the two M4 x 8 low profile socket cap screws per bar (see Figure 1).
3. Pull the inner slide rails out from the rack slides and push the stopper to fully detach and disassemble the rails.
4. Install the inner slide rails to the filler bars with the four M4 x 8 pan head screws (see Figure 1).
5. Fit the support brackets to slide rails (see Figure 2) with the two 10-32 x 1/2 pan head screws and one nut plate for each slide. Do not tighten yet.
6. Install the slide rail assemblies to rack (see Figure 3) using four 10-32 x 1/2 pan head screws and two nut plates for each slide.
7. Fully tighten all screws.

Note

Additional mounting hardware is included for different rack configurations.

8. Extend the slide rails fully.
9. Install the Product into the slide rails.Ensure that the inner slides engage correctly in the slides.
10. Install 10-32 U-nuts in the rack to line up with the mounting holes in rack ears.
11. Push the stoppers on both slide rails and slide the Product into the rack.
12. Secure the Product to the rack by fastening the rack ears using two 10-32 x 3/4 decorative-head screws for each ear.

Contact Fluke Calibration

To contact Fluke Calibration, call one of the following telephone numbers:

- Technical Support USA: 1-877-355-3225
- Calibration/Repair USA: 1-877-355-3225
- Canada: 1-800-36-FLUKE (1-800-363-5853)
- Europe: +31-40-2675-200
- Japan: +81-3-6714-3114
- Singapore: +65-6799-5566
- China: +86-400-810-3435
- Brazil: +55-11-3759-7600
- Anywhere in the world: +1-425-446-6110

To see product information and download the latest manual supplements, visit Fluke Calibration's website at www.flukecal.com.

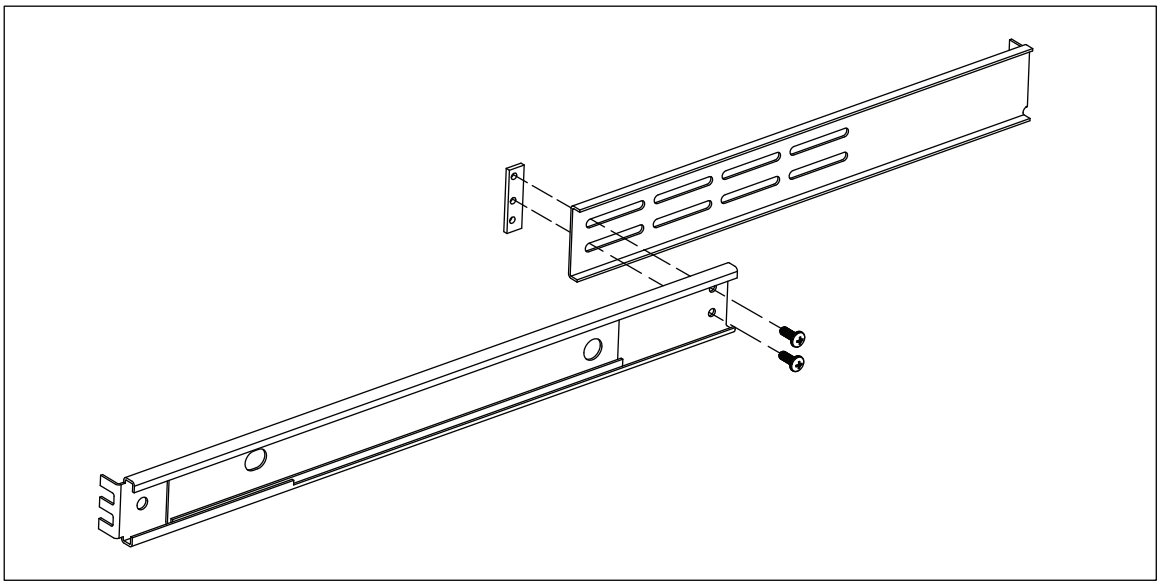

hvl003.eps

Figure 2. Assemble the Rack Slides

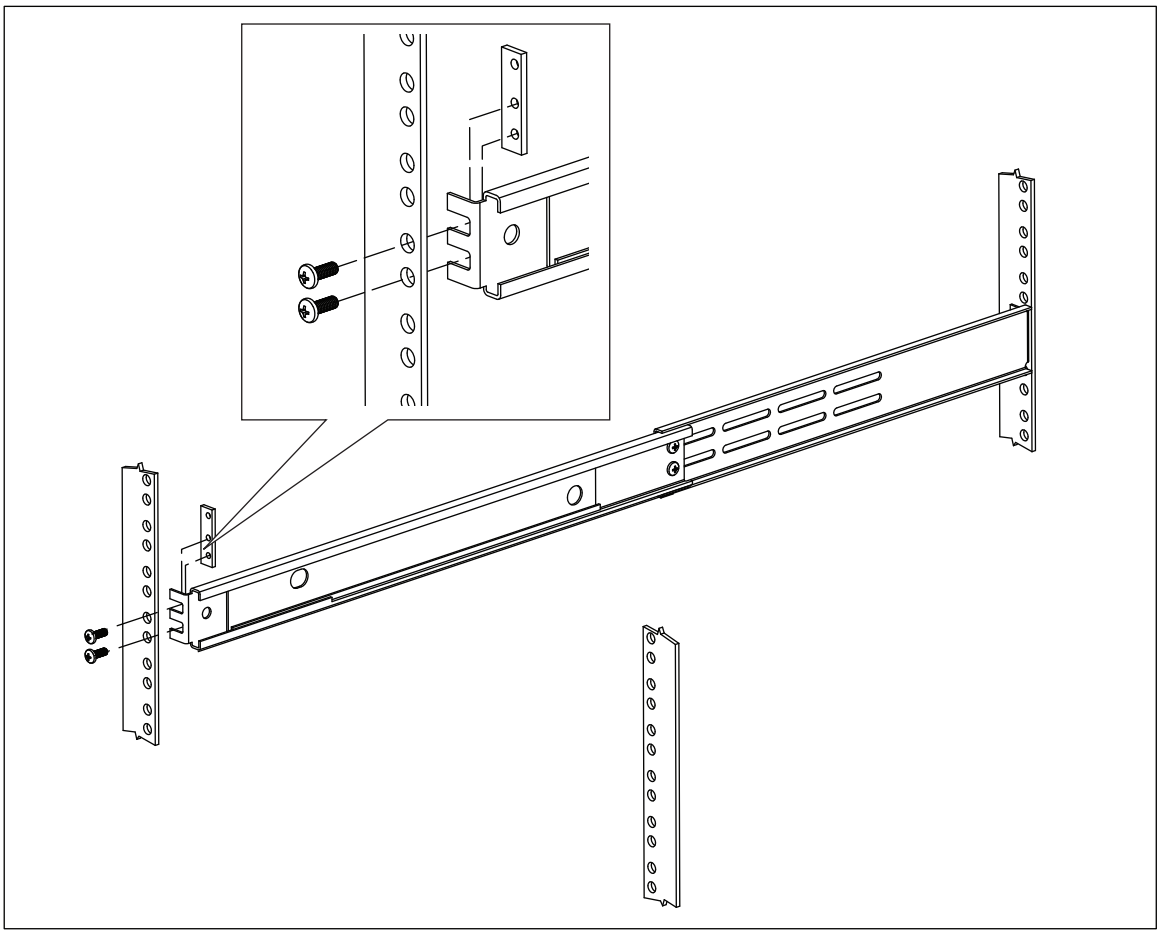

hvl008.eps

Figure 3. Install the Rack Slides

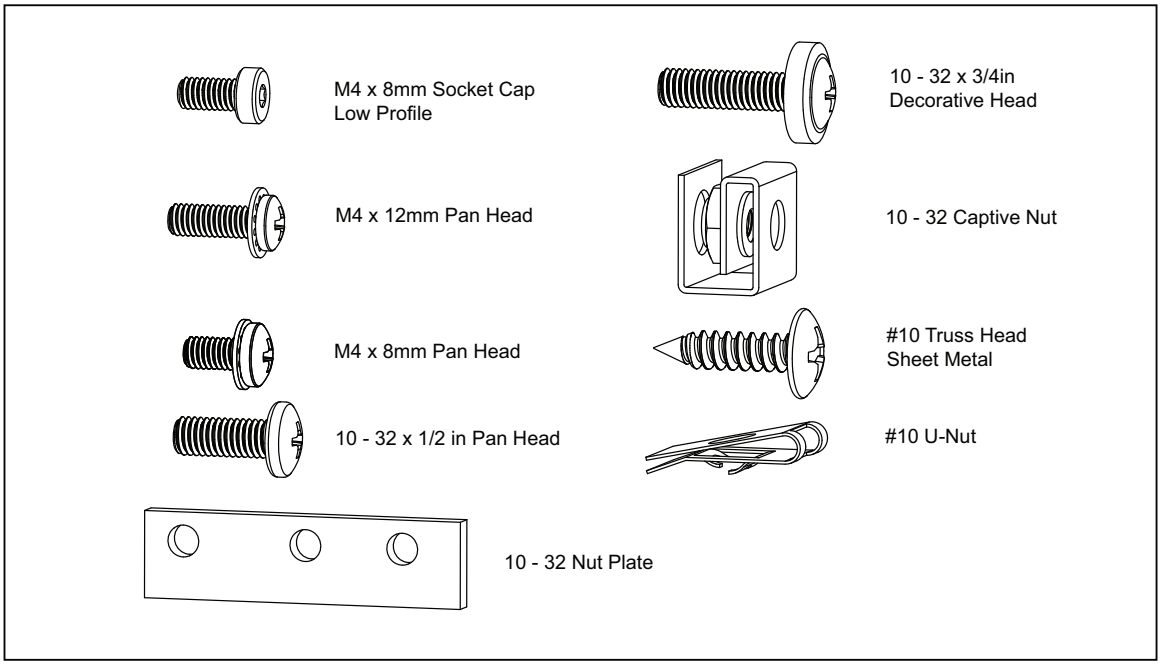

hvl005.eps

Figure 4. Screw Identification