FLUKE®
Calibration

Y9600
Rack-Mount Kit

Instructions

Introduction

This sheet supplies instructions to mount the Product into a standard 19-inch equipment rack. The Rack-Mount Slide Kit (the kit) contains all of the components necessary.

⚠Warning

To prevent possible injury, do not restrict access to the Product power cord, which is the mains disconnecting device. If access to the mains power cord is inhibited by rack mounting, a properly-rated accessible proximate mains disconnecting switch must be provided as part of the installation.

Note

Review the mounting instructions provided by the manufacturer of the equipment rack before you proceed with the installation.

Install Slides on the Product

Install the slides on the Product before you install the Product into the rack. The numbers in Figure 1 show the listed process steps.

Note

Do not remove the top or bottom cover to rack-mount the Product.

To install the slides:

1. Push a flat-blade screwdriver between the chassis and the plastic strip to remove the plastic side-trim from the Product. Pry outward until the strip is free of the two grooves, and then pull the strip free from the Product.
2. Attach each rack-mount ear to the front of the Product:

   Note

   So that the bezel is not detached, complete one side before you start on the other side.

   a. Remove the top and bottom hex screws from the side of each front handle.

   b. Position each ear so that the holes in its tabs align with the screw holes on a front handle.

   c. Use two M4 x 16mm or two 8-32 x ½ inch pan-head screws to attach each ear to the Product. See Figure 2 for screw identification.
3. Use the two 8-32 x ¼ inch truss-head screws to secure each of the two rack-mount filler bars to the Product.
4. Attach a slide bar to both sides of the Product. Secure each with three 8-32 x ¼ inch truss-head screws.
5. Remove the four plastic molded feet from the bottom of the Product:

   a) Use a flat-blade screwdriver to push the tab in the recess of each foot and pull the foot from the cover.

   b) Store the feet for future use.

 ©2016-2018 Fluke Corporation. All rights reserved.

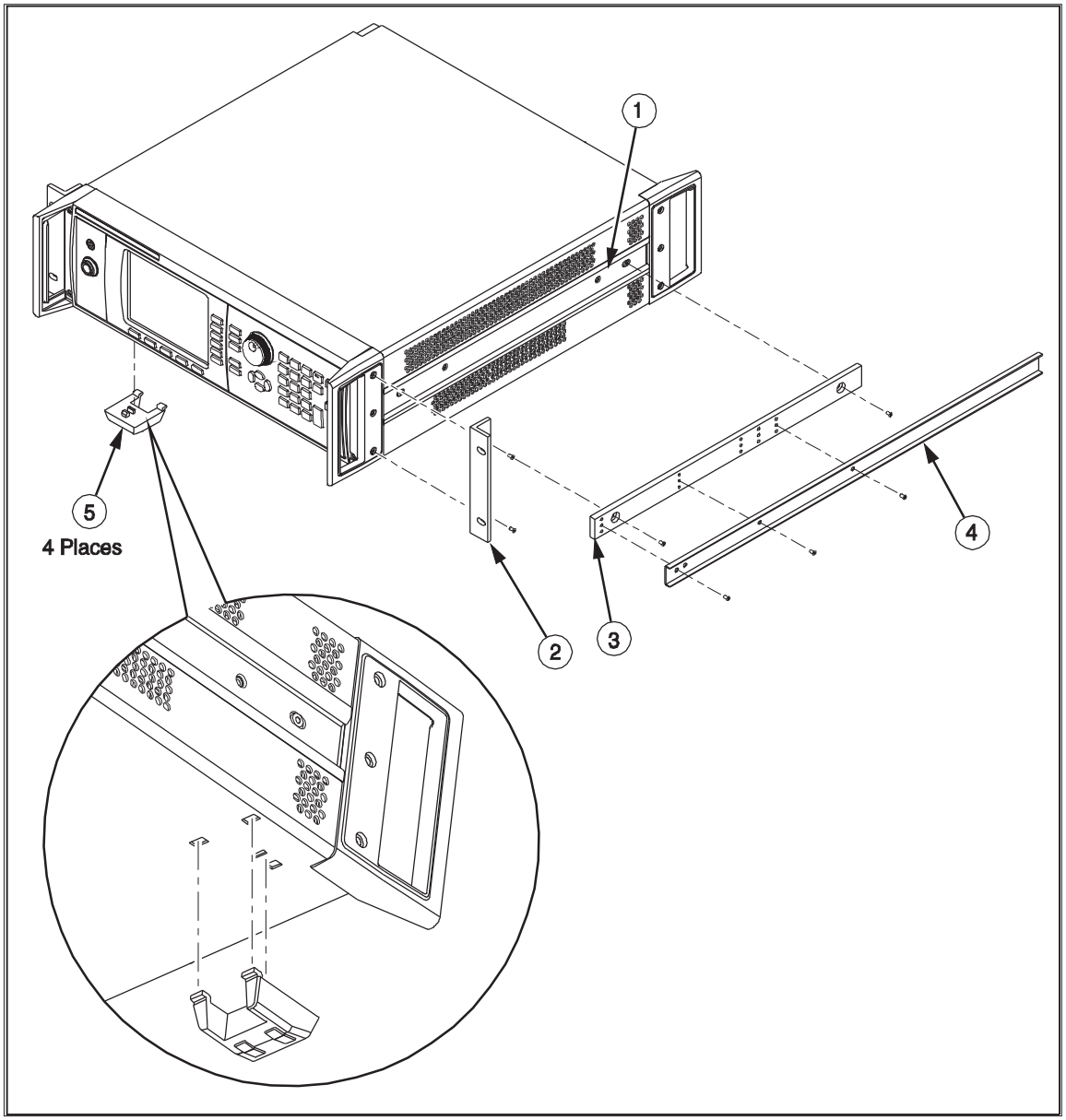

lct001.eps

Figure 1. Attach the Hardware to the Product

Install Rack Slides

1. Install the front slide brackets (shorter pair) to the rack mounting rails. See Figure 3. If your rack has threaded mounting rails, use two #10-32 x 1/2-inch truss-head screws. See Figure 3, Detail A. If your rack has unthreaded mounting rails, use two #10-24 x 1/2-inch truss-head screws and two #10-24 U-nuts. See Figure 3, Detail B.
2. Install the rear slide brackets (longer pair) to the equipment rack mounting brackets as described in step 1.
3. Attach the slides to the front brackets with two #8-32 x 1/2-inch pan-head screws, two #8 flat washers, two #8 lock washers and two #8 hex nuts. See Figure 3. Align the access hole in the slide by moving the slide in and out as necessary to access the screw heads.
4. Fully extend the slides to access the screw heads and attach the slides to the rear brackets as described in step 3.

Install the Product into the Equipment Rack

To install the Product into a 19-inch equipment rack:

1. With assistance, lift the Product and insert the end of each slide bar (on the Product) into the appropriate slide-bar on the equipment rack. See Figure 3.
2. Push the Product into position.
3. Secure the Product front rack ears to the rack mounting rails with two #10-32 x ¾ inch decorative-head screws per ear. If your rack has unthreaded mounting rails, install two #10-32 U-nuts in the appropriate places on the rail holes.

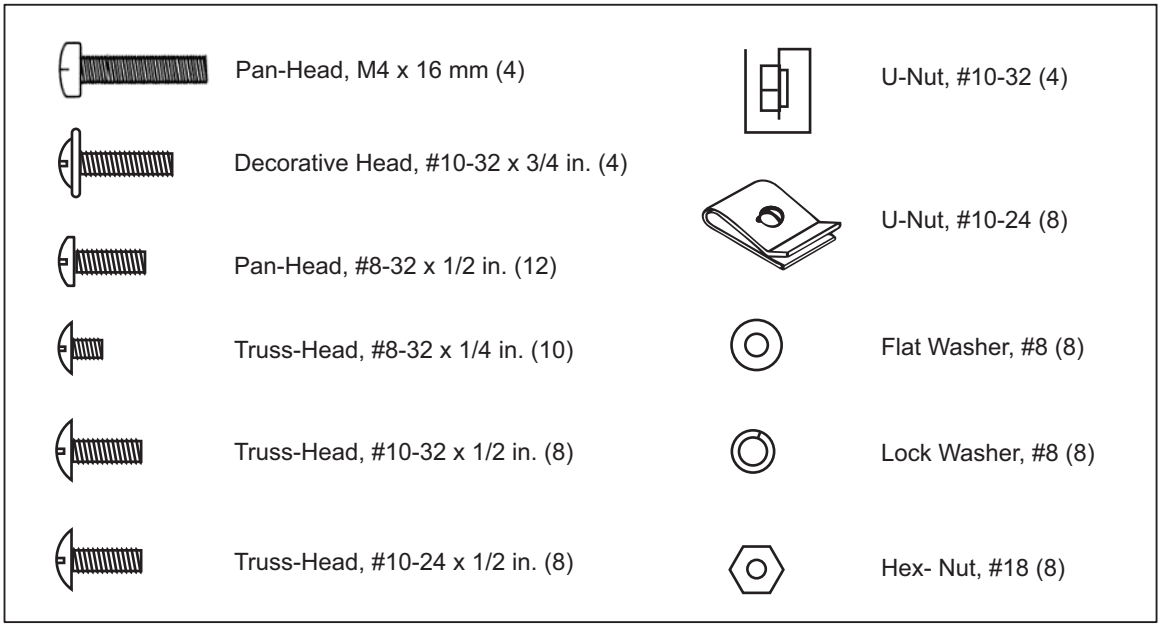

lct002.eps

Figure 2. Screw Identification

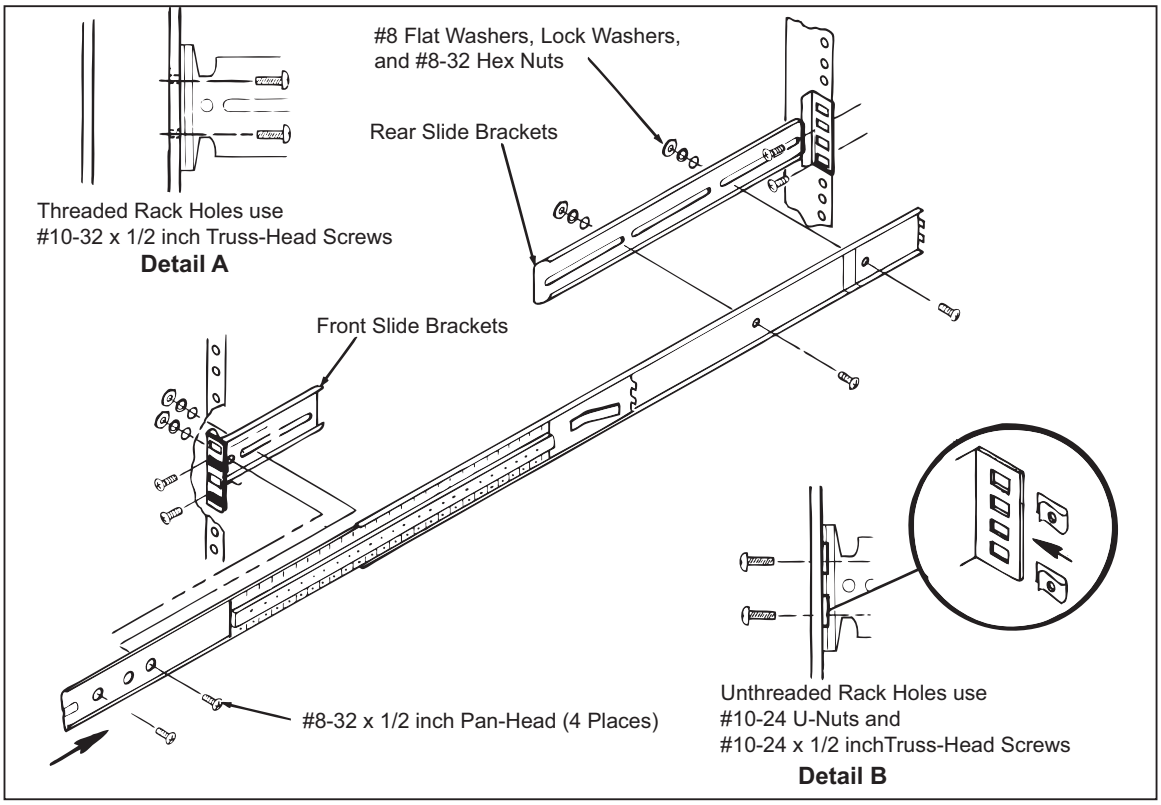

lct003.eps

Figure 3. Install Slides into the Equipment Rack

Contact Fluke Calibration

To contact Fluke Calibration, call one of the following telephone numbers:

- Technical Support USA: 1-877-355-3225
- Calibration/Repair USA: 1-877-355-3225
- Canada: 1-800-36-FLUKE (1-800-363-5853)
- Europe: +31-40-2675-200
- Japan: +81-3-6714-3114
- Singapore: +65-6799-5566
- China: +86-400-810-3435
- Brazil: +55-11-3759-7600
- Anywhere in the world: +1-425-446-6110

To see product information and download the latest manual supplements, visit Fluke Calibration's website at www.flukecal.com.

To register your product, visit http://flukecal.com/register-product