FLUKE®
Calibration

Y5735/Y5737/Y5320
Rack Mount Kit

Instruction Sheet

Introduction

This sheet provides instruction for mounting the 5320A Multifunction Calibrator, 5700A Multifunction Calibrator, 5725A Amplifier, 5730A Multifunction Calibrator, and 5790A/5790B AC Measurement Standards into a standard 19.12-inch panel opening E.I.A. universal spacing equipment rack. The Y5735 Rack Mount Kit is for the 5725A Amplifier. Kit contents and instructions for installation are the same for both kits, except for the size of the rack ears and usage of filler bar to slide rail mounting holes.

⚠Warning

To prevent personal injury:

- **Read all safety information before you use the Product.**
- **Use the Product only as specified, or the protection supplied by the Product can be compromised.**
- **Use both lifting handles and good lifting practice when lifing or carrying any equipment to be mounted in the rack.**

Preparation

Before installing the rack mount kit, remove the top and bottom screws from the sides of the front instrument handles. Leave the center screws installed. Remove the plastic filler strips from the sides of the instrument by prying one end of each strip free using a flat-head screwdriver.

Installation

To install a kit, proceed as follows:

1. Attach the rack ears to the instrument using two #8-32 x ½" pan-head screws for each ear as Figure 1 shows.
2. Install the filler bars on the sides of the instrument using two #8-32 x ¼" truss-head machine screws per bar as Figure 1 shows, making sure the first tapped hole closest to the end of the bar is toward the front of the instrument.
3. Pull the slide rails out from the rack slides and push the stopper to fully detatch and disassemble the rails.
4. Attach the slide rails to the filler bars using four #8-32 x 3/8-inch pan flathead screws for each rail as Figure 1 shows. Mount the 5730A, 5790A, and 5790B slide rail to the center row of holes. Mount the 5725A slide rail to the lower row of holes. (See Figure 1.)
5. Install the front slide brackets (shorter pair) to the equipment rack mounting rails as Figure 2 shows. (Refer to Figure 3 and 4 for typical mounting holes spacing.) If your rack has threaded mounting rails, use two #10-32 x ½" truss-head screws as shown in Figure 2, Detail A. If your rack has unthreaded mounting holes, use two #10-24 x ½" truss-head screws and two #10-24 U-nuts as shown in Figure 2, Detail B.
6. Install the rear slide bracket (longer pair) to the equipment rack mounting brackets the same way as the front.
7. Attach the slides to the front brackets using two #8-32 x 3/8-inch flat Philips-head screws, two #8 flat washers, two #8 lock washers, and two #8 UNC hex nuts as Figure 2 shows. Align the slides to the rear brackets the same way as the front, except fully extend the slides to access the screw heads.
8. Plug the instrument into the slides, unlock the slides and push the instrument into the rack.
9. Secure the instrument to the rack by fastening the rack ears to the mounting rails with two #10-32 x ¾" decorative-head screws per ear. If your rack has unthreaded mounting rails, install two #10-32 U-nuts in appropriate places in the rail holes.

 ©1998 – 2016 Fluke Corporation. All rights reserved.

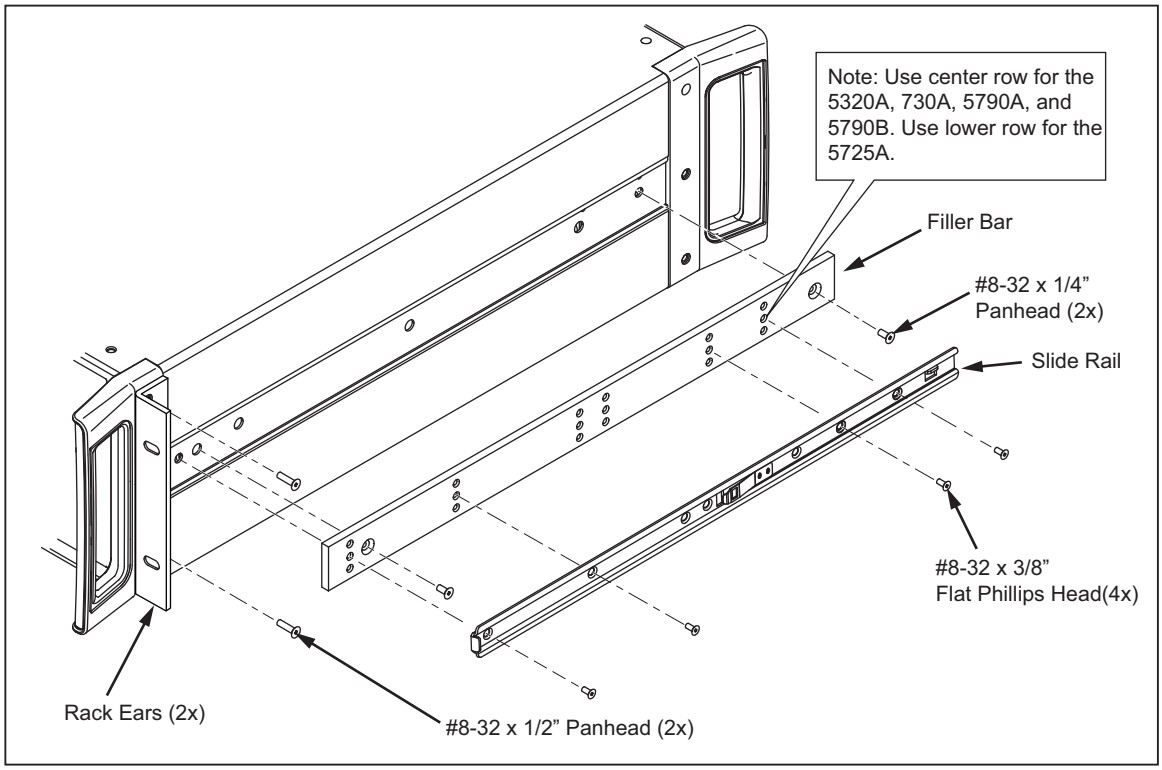

Figure 1. Attaching Hardware to the Instrument

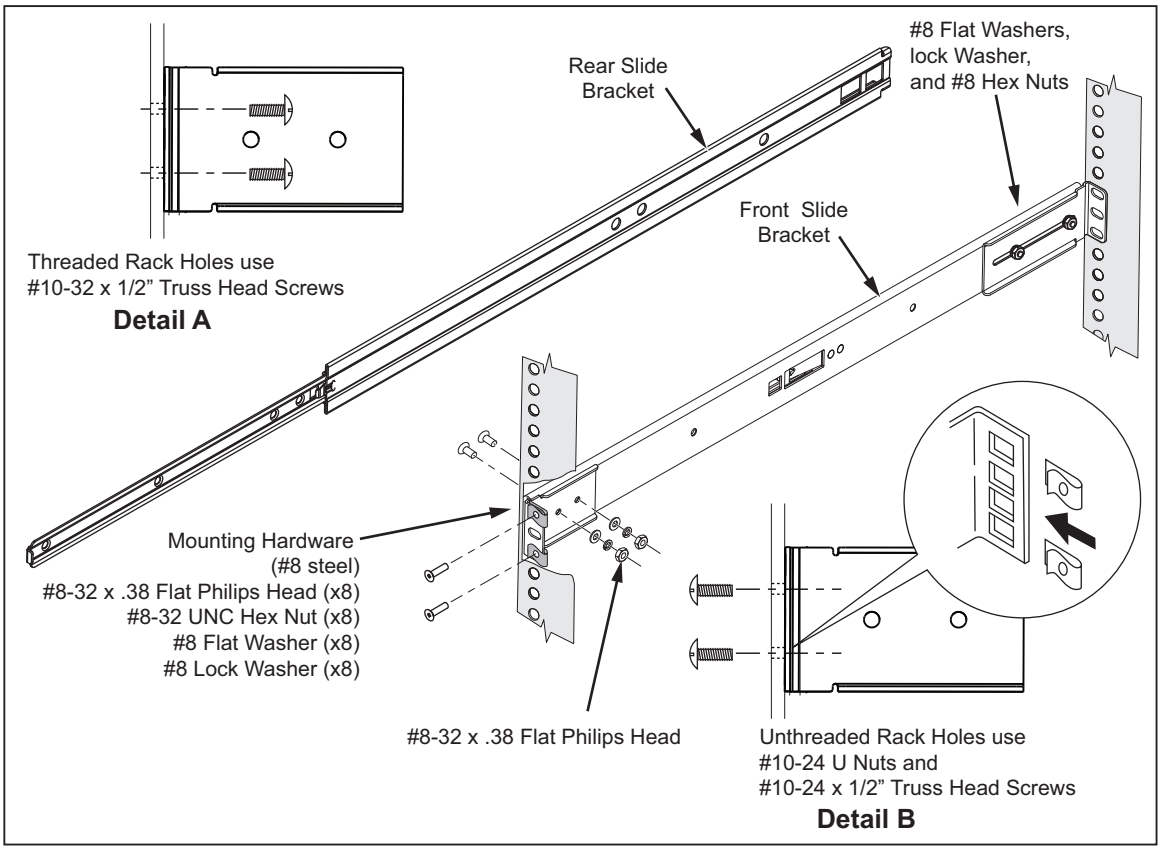

Figure 2. Installing Rack Slides

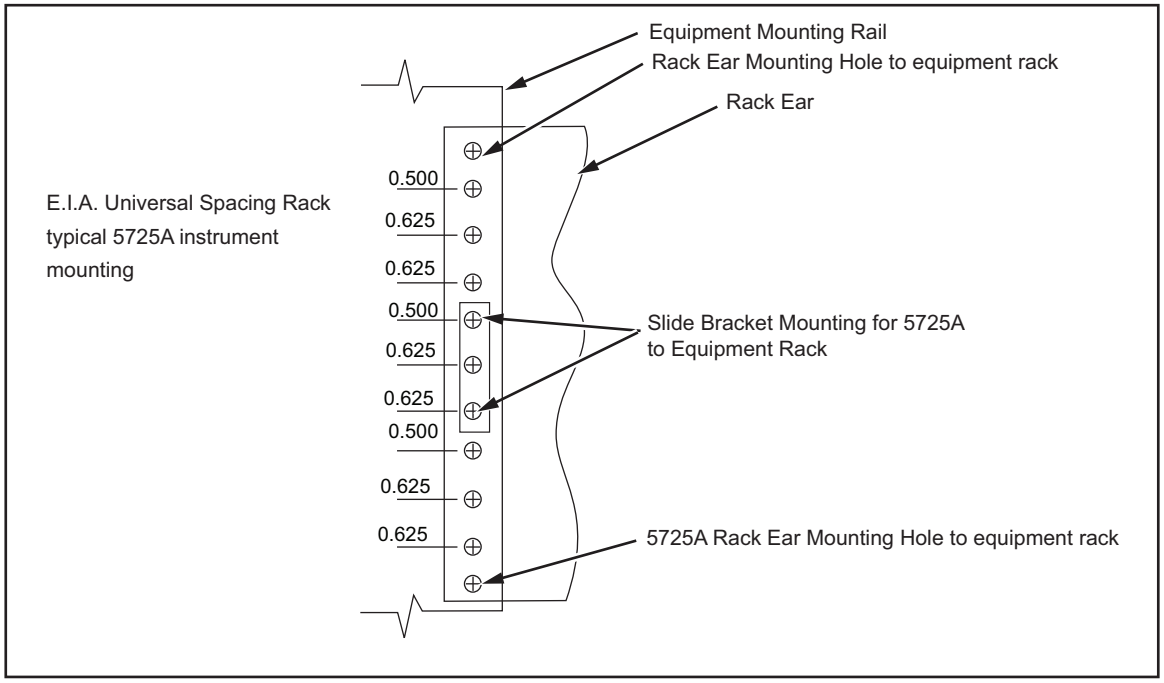

Figure 3. Typical 5725A Mounting Locations

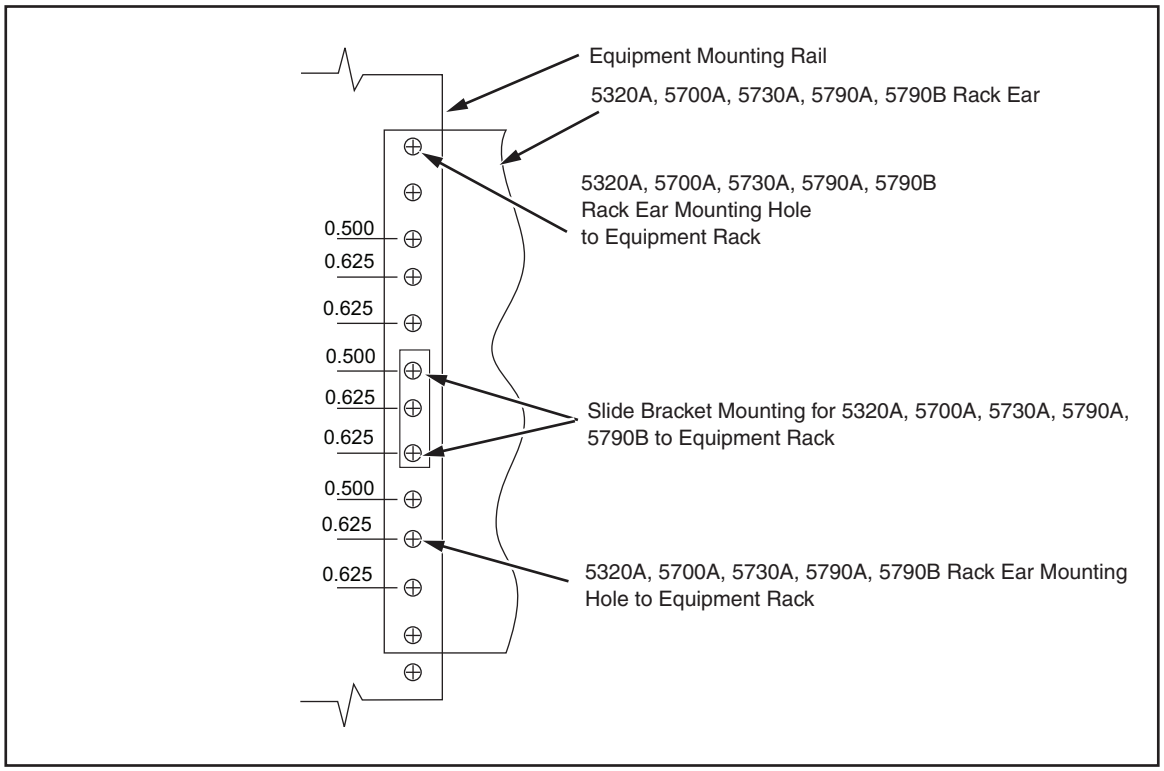

Figure 4. Typical 5320A, 5700A, 5730A, 5790A, 5790B Mounting Locations

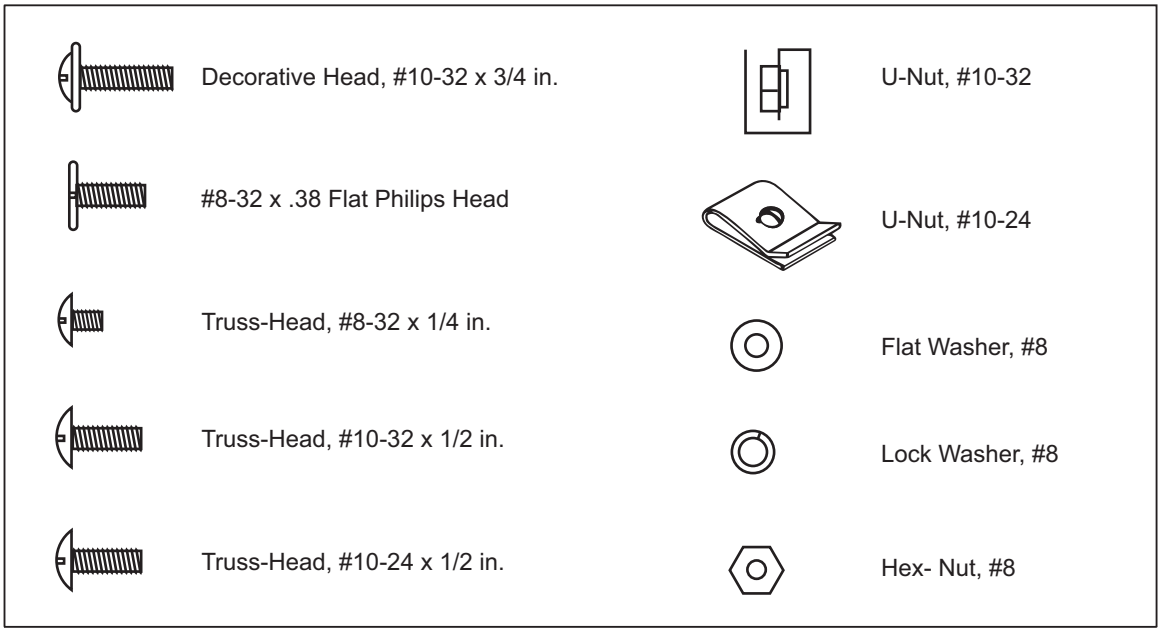

Figure 5. Screw Identification