FLUKE®

305
Clamp Meter

Users Manual

PN 4045148 (English)
June 2012 Rev. 2, 5/24
©2012-2024 Fluke Corporation. All rights reserved. Specifications are subject to change without notice.
All Product names are trademarks of their respective companies.

LIMITED WARRANTY AND LIMITATION OF LIABILITY

This Fluke product will be free from defects in material and workmanship for two years from the date of purchase. This warranty does not cover fuses, disposable batteries, or damage from accident, neglect, misuse, alteration, contamination, or abnormal conditions of operation or handling. Resellers are not authorized to extend any other warranty on Fluke's behalf. To obtain service during the warranty period, contact your nearest Fluke authorized service center to obtain return authorization information, then send the product to that Service Center with a description of the problem.

THIS WARRANTY IS YOUR ONLY REMEDY. NO OTHER WARRANTIES, SUCH AS FITNESS FOR A PARTICULAR PURPOSE, ARE EXPRESSED OR IMPLIED. FLUKE IS NOT LIABLE FOR ANY SPECIAL, INDIRECT, INCIDENTAL OR CONSEQUENTIAL DAMAGES OR LOSSES, ARISING FROM ANY CAUSE OR THEORY. Since some states or countries do not allow the exclusion or limitation of an implied warranty or of incidental or consequential damages, this limitation of liability may not apply to you.

Fluke Corporation
6920 Seaway Blvd
Everett, WA 98203
U.S.A.

Fluke Europe B.V.
P.O. Box 1186
5602 BD Eindhoven
The Netherlands

11/99

Table of Contents

Title **Page**

Introduction 1
Contact Fluke 1
Safety Information 2
Jaw Maintenance 2
How to Clean the Product 3
Product Disposal 3
Specifications 4
  Electrical Specifications 4
  Mechanical Specifications 5
  Environmental Specifications 5
The Product 6

Introduction

The Fluke 305 Clamp Meter (the Product) measures ac and dc voltage, ac current, resistance, and continuity.

⚠⚠ Warning

Read *Safety Information* before you use the Product.

Contact Fluke

Fluke Corporation operates worldwide. For local contact information, go to our website: www.fluke.com.

To register your product, or to view, print, or download the latest manual or manual supplement, go to our website: www.fluke.com/productinfo.

+1-425-446-5500 fluke-info@fluke.com

Safety Information

A **Warning** identifies hazardous conditions and procedures that are dangerous to the user. A **Caution** identifies conditions and procedures that can cause damage to the Product or the equipment under test.

General Safety Information is in the printed Safety Information document that ships with the Product and at www.fluke.com. More specific safety information is listed where applicable.

Note

The Measurement Category (CAT) and voltage rating of combinations of test probes, test probe accessories, current clamp accessories, and the Product is the LOWEST rating of individual components.

Jaw Maintenance

If the Product does not work properly:

1. Inspect the jaw matting surface for cleanliness. If any foreign material (including rust) is present, the jaw will not close properly and measurement errors will result.
2. Open the jaws and wipe the clamp metal ends with a lightly oiled cloth.

How to Clean the Product

Regularly wipe the case with a damp cloth and mild detergent.

⚠ Caution

To prevent damage to the Product, do not use abrasives or solvents to clean the Product case.

Product Disposal

Dispose of the Product in a professional and environmentally sound manner:

- Delete personal data on the Product before disposal.
- Remove batteries that are not integrated into the electrical system before disposal and dispose of batteries separately.
- If this Product has an integral battery, put the entire Product in the electrical waste.

Specifications

Electrical Specifications

AC Current (Jaw)

Range 999.9
Resolution .....0.1 A
Accuracy .....1.5 % ±5 digits (45 Hz to 400 Hz)

Note

Add 2 % for position sensitivity.

AC Voltage

Range .....600.0 V
Resolution .....0.1 V
Accuracy .....1.5 % ±5 digits (45 Hz to 400 Hz)

DC Voltage

Range .....600.0 V
Resolution .....0.1 V
Accuracy .....1 % ±5 digits

Resistance

Range .....400.0 Ω/4000 Ω
Resolution .....0.1 Ω/1 Ω
Accuracy .....1 % ±5 digits
Continuity Beeper .....≤70 Ω

Mechanical Specifications

Size (L x W x H).....207 mm x 75 mm x 34 mm
Weight .....205 g

Environmental Specifications

Temperature Coefficients.....Add 0.1 x specified accuracy for each °C above 28 °C or below 18 °C

The Product

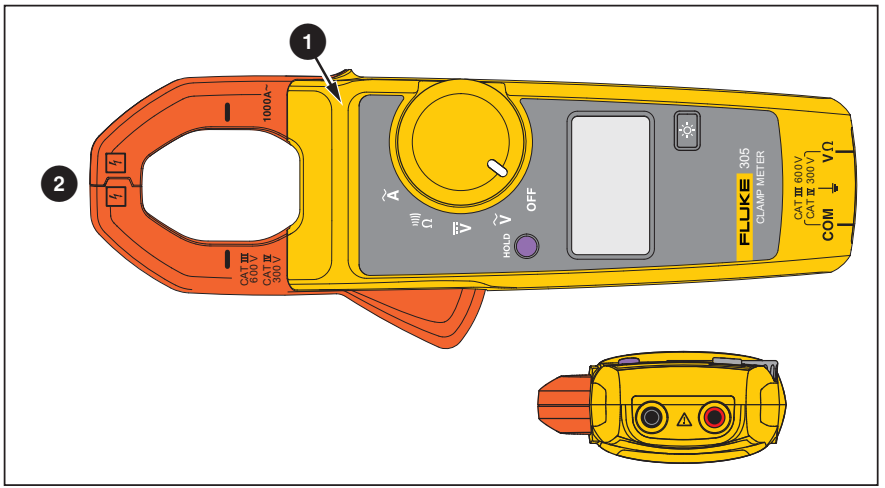
1
2
1000A~
CAT III 600V
CAT II 300V
~A
Ω
V
~V
OFF
HOLD
FLUKE
305
CLAMP METER
CAT III 600V
CAT II 300V
COM
VΩ

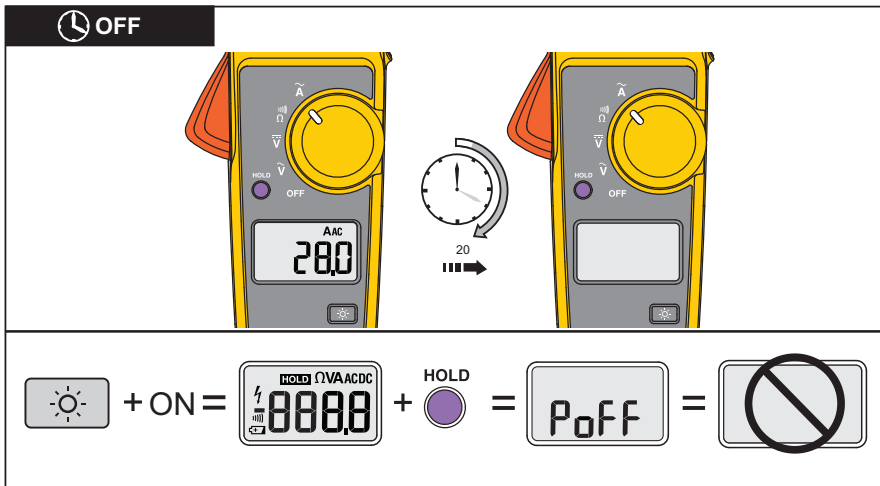
OFF
HOLD
OFF
AAC
28.0
20
+ ON =
HOLD ΩVA ACDC
8888
+
HOLD
=
PoFF
=

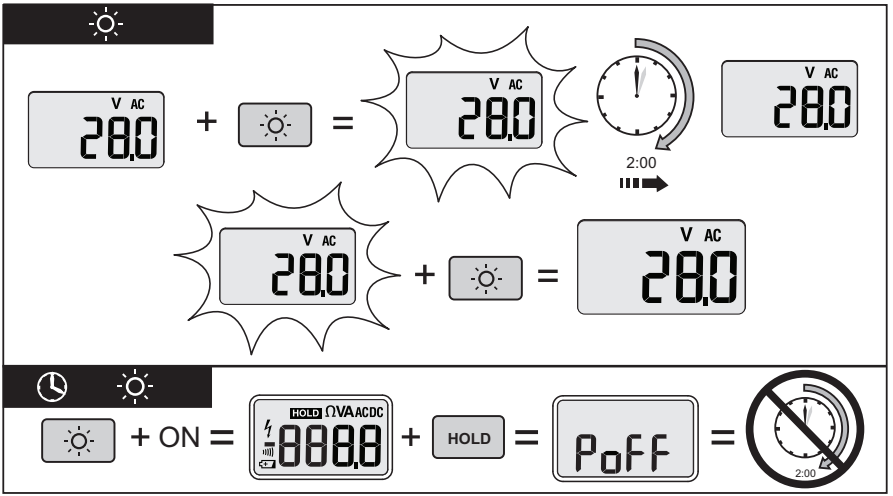
V AC
28.0
+
=
2:00
+ ON =
HOLD ΩVAACDC
8888
HOLD
PoFF

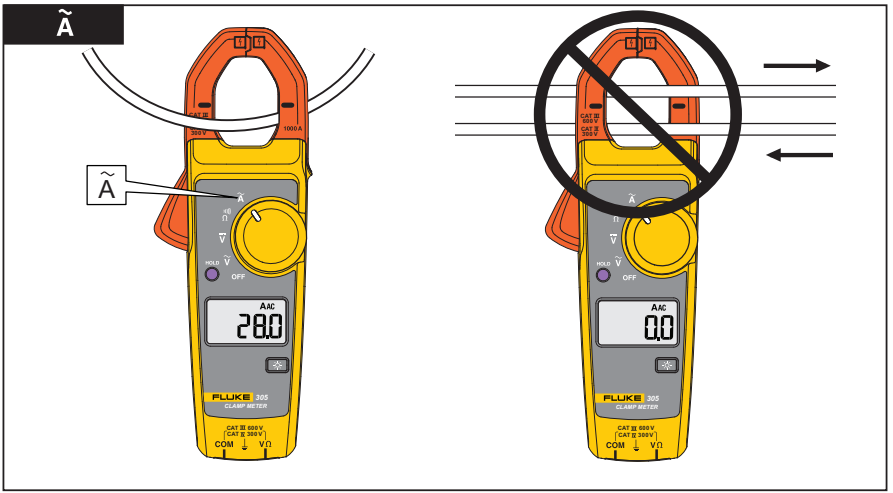
Ã
Ã
AAC
28.0
FLUKE 305
CLAMP METER
COM
VΩ
AAC
0.0
FLUKE 305
CLAMP METER
COM
VΩ

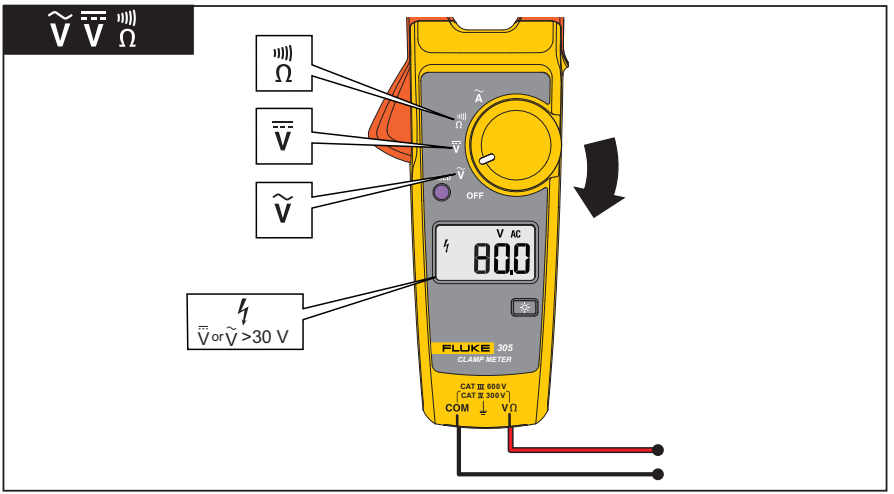
V V Ω
Ω
V
V
V or V >30 V
OFF
V AC
80.0
FLUKE 305
CLAMP METER
CAT III 600 V
CAT II 300 V
COM
VΩ

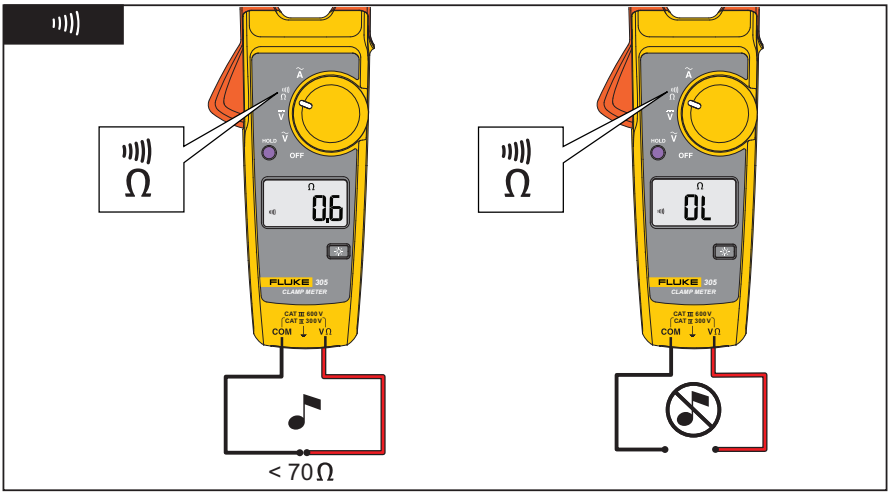
Ω
0.6
OFF
HOLD
FLUKE 305
CLAMP METER
COM
< 70 Ω
Ω
OL
OFF
HOLD
FLUKE 305
CLAMP METER
COM

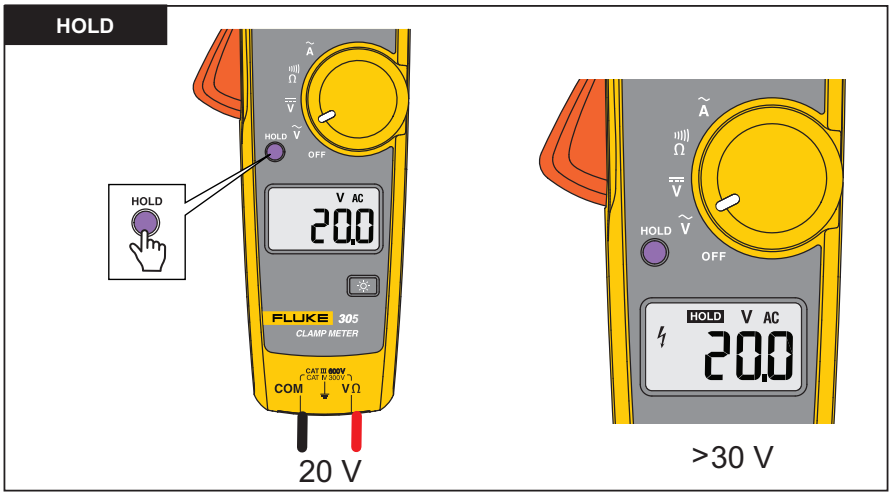
HOLD
HOLD
HOLD
OFF
V AC
20.0
FLUKE 305
CLAMP METER
CAT III 600V
CAT IV 300V
COM
V Ω
20 V
HOLD
OFF
HOLD V AC
20.0
>30 V

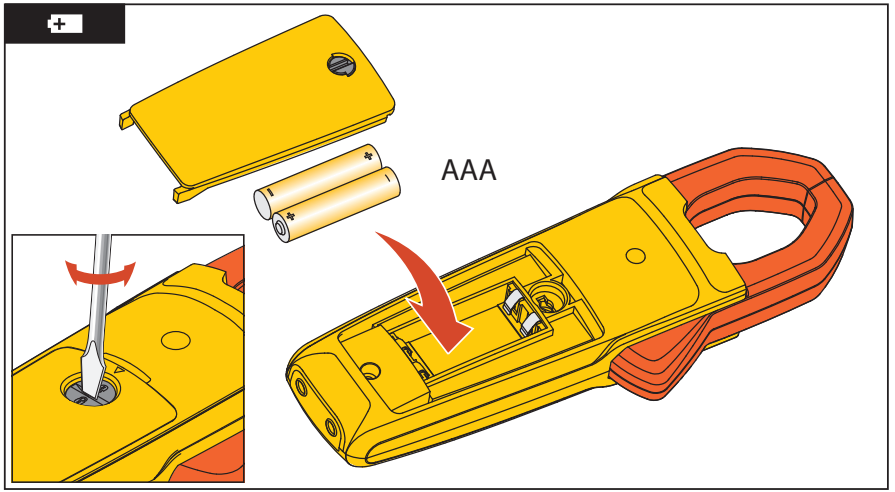
AAA