QRG

FLUKE

2052R/2062R
Wire Tracer Receiver
2000T
Wire Tracer Transmitter

www.fluke.com



PN 5517778 2/2023
©2023 Fluke Corporation. All Rights Reserved.

2000T

1

GFI ✕

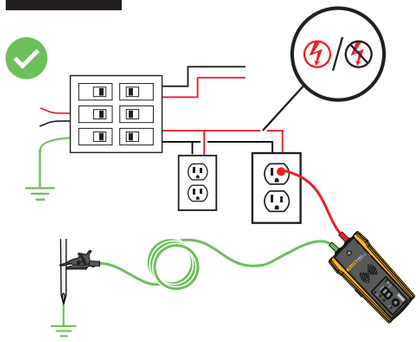

GFI

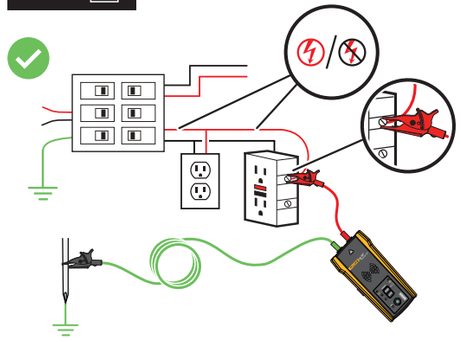

GFI

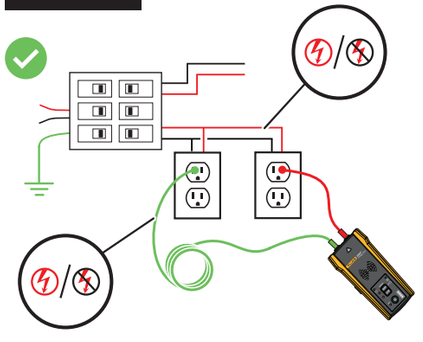

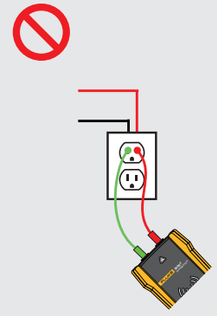

RCD ✕

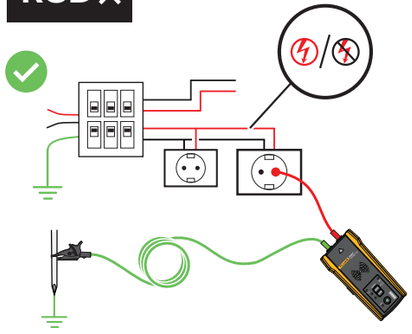

RCD

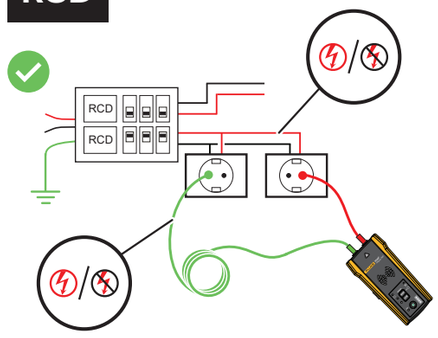

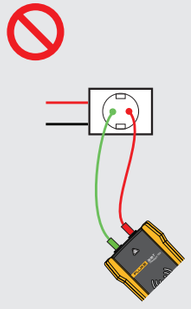

2

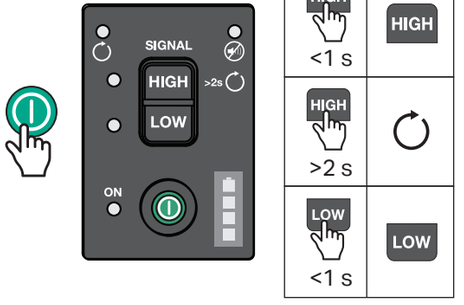

2052R

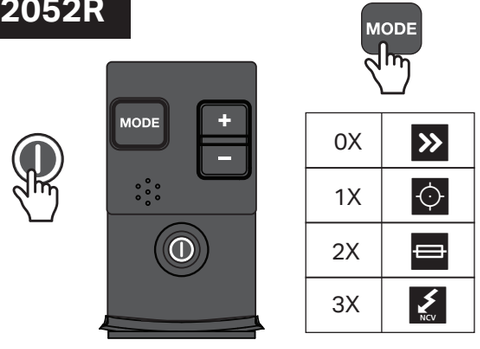

2062R

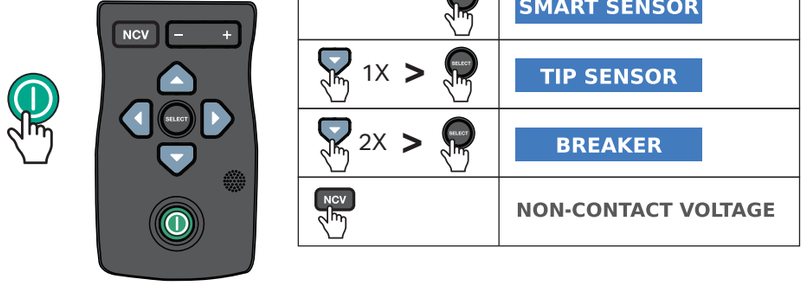

SMART SENSOR™ (2062R)

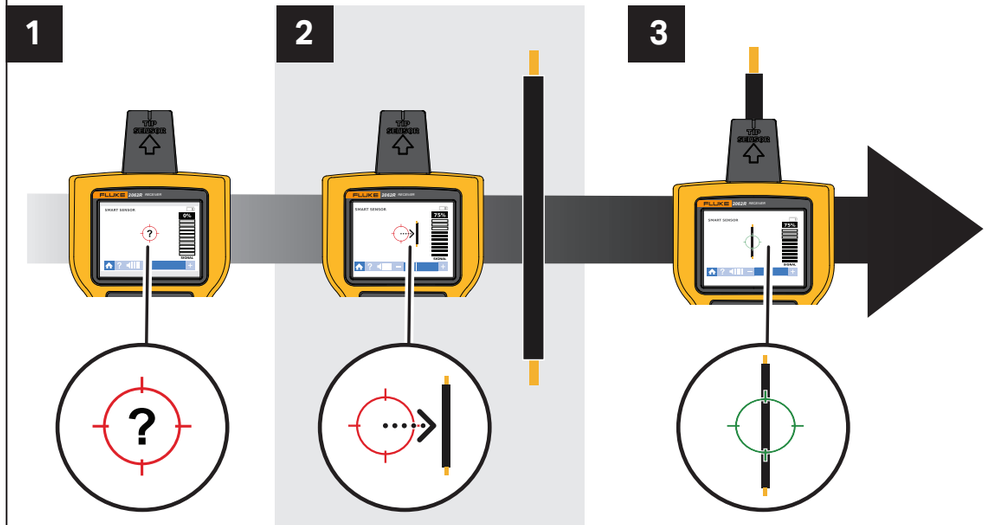

(2052R) / TIP SENSOR (2062R)

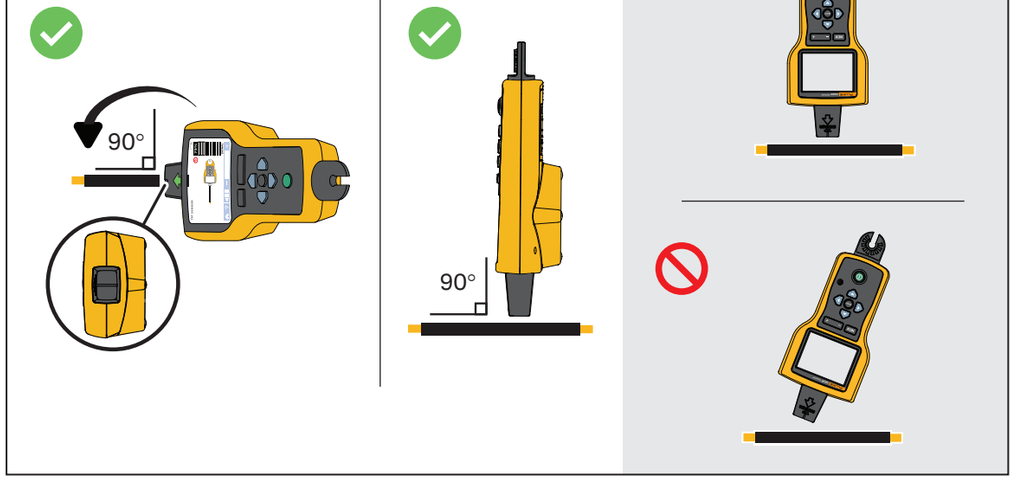

(2052R) / BREAKER (2062R)

