PQ400

PQ Window

Voltage/Current Measurement Feed-Through Device for Electrical Enclosures

Instructions

PQ Window (the Product) is an accessory that mounts to the flat surface of a Type 12 electrical enclosure (derate to Type 1 during measurements). When the Product is installed and signal feeds connected, you can safely perform voltage and current measurements from outside the enclosure.

Standard 4 mm safety sockets on the front provides access to the three phases (A/L1, B/L2, C/L3), Neutral N, and Earth/ Ground for voltage measurements. The voltage outputs support instruments that are powered from the measurement line with a maximum power of 100 VA.

The Product supports current measurement with Fluke intelligent current sensors (iFlex1500-12, iFlex 3000-24, i40S-EL and i400S-EL). Go to www.fluke.com for a full list of compatible accessories.

The 354x FC, 173x Power, and 174x Power Quality Loggers automatically read the sensor information, such as, the type, serial number, scale factor, and phase angle compensation. Use the optional adapter kit to connect instruments and current sensors that have BNC connectors.

PN 4954885 October 2018 Rev. 1, 2/19

©2018-2019 Fluke Corporation. All rights reserved.
Specifications are subject to change without notification.
All product names are trademarks of their respective companies.

Fluke Corporation
P.O. Box 9090
Everett, WA 98206-9090
U.S.A.

Fluke Europe B.V.
P.O. Box 1186
5602 BD Eindhoven
The Netherlands

ООО «Флюк СИАЙЭС»
125167, г. Москва,
Ленинградский проспект дом 37,
корпус 9, подъезд 4, 1 этаж

To contact Fluke, call one of the following telephone numbers:

- Technical Support USA: 1-800-44-FLUKE (1-800-443-5853)
- Calibration/Repair USA:
- 1-888-99-FLUKE (1-888-993-5853)
- Canada: 1-800-36-FLUKE (1-800-363-5853)
- Europe: +31 402-675-200
- Japan: +81-3-6714-3114
- Singapore: +65-6799-5566
- China: +86-400-921-0835
- Brazil: +55-11-3530-8901
- Anywhere in the world: +1-425-446-5500

Or, visit Fluke's website at www.fluke.com.

To register your product, visit http://register.fluke.com.

To view, print, or download the latest manual supplement, visit http://us.fluke.com/usen/support/manuals.

A **Warning** identifies conditions and procedures that are dangerous to the user.

⚠⚠ Warning

To prevent possible electrical shock, fire, or personal injury:

- **Read all safety information before you use the Product.**
- **Carefully read all instructions.**
- **Do not alter the Product and use only as specified, or the protection supplied by the Product can be compromised.**
- **Do not touch voltages >30 V ac rms, 42 V ac peak, or 60 V dc.**
- **Do not use the Product around explosive gas, vapor, or in damp or wet environments.**

- **Only install the Product to the specified measurement category, voltage, or amperage ratings.**
- **Do not exceed the Measurement Category (CAT) rating of the lowest rated individual component of a Product, probe, or accessory.**
- **Do not use the Product if it is damaged.**
- **De-energize the voltage inputs before you open the feed-through box.**
- **Comply with local and national safety codes. Use personal protective equipment (approved rubber gloves, face protection, and flame-resistant clothes) to prevent shock and arc blast injury where hazardous live conductors are exposed.**
- **Use a circuit breaker rated for the wire gauge used on the voltage inputs to the Product.**
- **Make sure that the sealing areas are clean before you close the cover.**
- **Use only the replacement fuses specified by the manual.**
- **Only for installation on bonded metal enclosures that provide a protective earth connection.**

Symbols

Symbol	Description
	WARNING. RISK OF DANGER.
	WARNING. HAZARDOUS VOLTAGE. Risk of electric shock.
	Consult user documentation.
CAT III	Measurement Category III is applicable to test and measuring circuits connected to the distribution part of the building's low-voltage MAINS installation.
CAT IV	Measurement Category IV is applicable to test and measuring circuits connected at the source of the building's low-voltage MAINS installation.
	Conforms to European Union directives.
	Certified by CSA Group to North American safety standards.
	Conforms to relevant Australian EMC standards.
Type 1	NEMA 250 Enclosure Type. Enclosure suitable for indoor use under normal atmospheric conditions. Protection against access to hazardous parts and ingress of solid foreign objects (falling dirt).
Type 12	NEMA 250 Enclosure Type. Enclosure suitable for indoor use. Protection against dust, dripping, and light splashing of non-corrosive liquids.
	This product complies with the WEEE Directive marking requirements. The affixed label indicates that you must not discard this electrical/electronic product in domestic household waste. Product Category: With reference to the equipment types in the WEEE Directive Annex I, this product is classed as category 9 "Monitoring and Control Instrumentation" product. Do not dispose of this product as unsorted municipal waste.

Before You Start

Unpack the Product when it arrives. See Figure 1. Identify and make sure all the parts are in the shipment:

1. PQ Window Feed-Through Box
2. Top Plate (installed on 3)
3. PQ Window Frame with Cover
4. Top Plate Decal Set
5. Screws: x6 flathead (installed) / x6 panhead
6. Cable Marker Set
7. Current Test Leads (x4)

Note

A single current test lead is available as an optional accessory for Loggers that support five current channels.

Cable Tie Set (not shown)

Instruction Sheet (not shown)

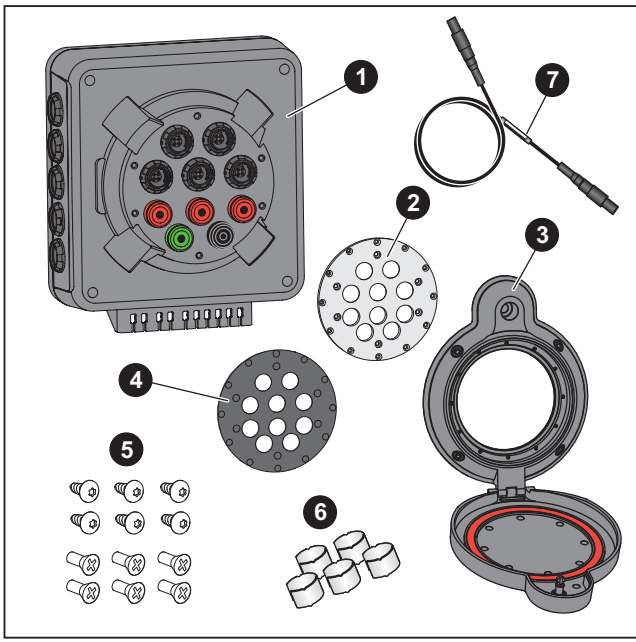

Figure 1. PQ Window Parts

Figure 2 shows the tools required for site preparation and installation:

1. Hole punch
2. Punch/Die 114.3 mm (4.5 in) for example, Greenlee 742BB
3. Twist drill
4. Center punch
5. Calibrated torque driver
6. File
7. Degreasing supplies (for example, Isopropyl alcohol and soft cloth)

Hex key bit 3/16 in (not shown)

Pozidriv screwdriver #1 (not shown)

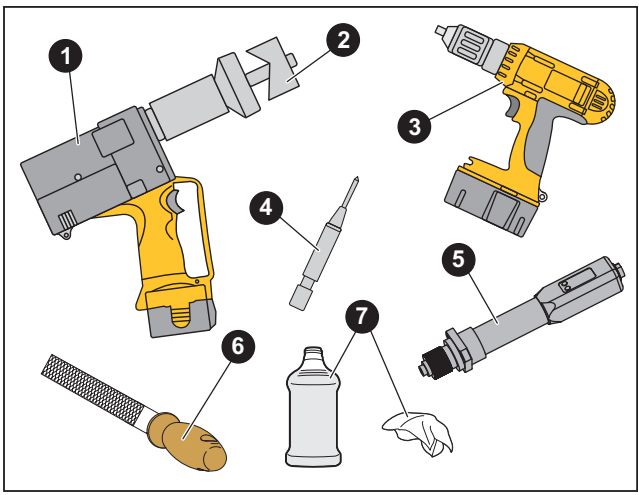

Figure 2. Tool Requirements

Accessories

- Fuse, 2A
- I17XX-BNC-M2M, Fluke-17XX 4-pin Male to BNC Male Cable 2 m (1x)
- I17XX-BNC-M2F, Fluke-17XX 4-pin Male to BNC Female Cable 0.1 m (1x)
- I17XX-FLEX2M-M2M4P, Fluke-17XX iFlex Male-Male Cable 2 m (4x)
- I17XX-FLEX2M-M2M1P, Fluke-17XX iFlex Male-Male Cable 2 m (1x)
- Fluke-PQ-MARKER, cable marker set 3PH+N+PE

Site Preparation

⚠⚠ Warning

To prevent possible electrical shock, fire, or personal injury, de-energize and lock-out the electrical enclosure (refer to local standards) before you install the Product.

These instructions use the Greenlee 742BB punch/die. For other punch/die models, see the instructions provided with the tool. See Figure 3 to prepare the installation site:

1. Mark a pilot hole with the center punch.
2. Drill a 6 mm (0.2 in) pilot hole with the twist drill and use a step drill bit to enlarge the 6 mm (0.2 in) pilot hole to 20 mm (0.8 in).

   Or, drill a 10 mm (0.4 in) pilot hole and then enlarge the hole to 22.5 mm (0.875 in) with a Punch/Die.
3. Use the Punch/Die with the Electro-hydraulic hole punch to make the 114.3 mm (4 ½ in) hole.
4. Deburr the holes and remove any shavings.
5. Degrease the front panel.

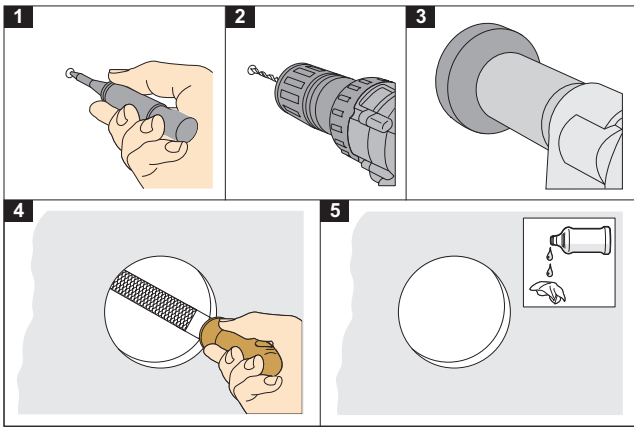

Figure 3. Site Preparation

Installation

⚠ Caution

Make sure that the gaskets and sealing areas are clean.

See Figure 4 to install:

1. Insert the PQ Window frame into the punched hole. Make sure the cover opens downwards.
2. Align and firmly hold the frame in place.

3. Apply a slight amount of torque to each of the four jam-nut screws to break them loose from the install position.

   Incrementally tighten each jam-nut screw in a cross-pattern to a torque of 5.7 N·m (50 lbf·in). This torque makes sure that the frame gasket is compressed for an optimum seal.

4. Insert the PQ Window Feed-Through Box from the rear to the front plate.Fasten the front plate with the 6 panhead screws.

5. If the space for the standard configuration is too small, remove the top plate and rotate in 90 ° increments to change the orientation.

6. Apply the top plate decal from the decal set that applies to the orientation of the feed-through box.

7. Close the window door firmly and twist the quarter-turn fastener from the vertical position to the horizontal position to latch the door.

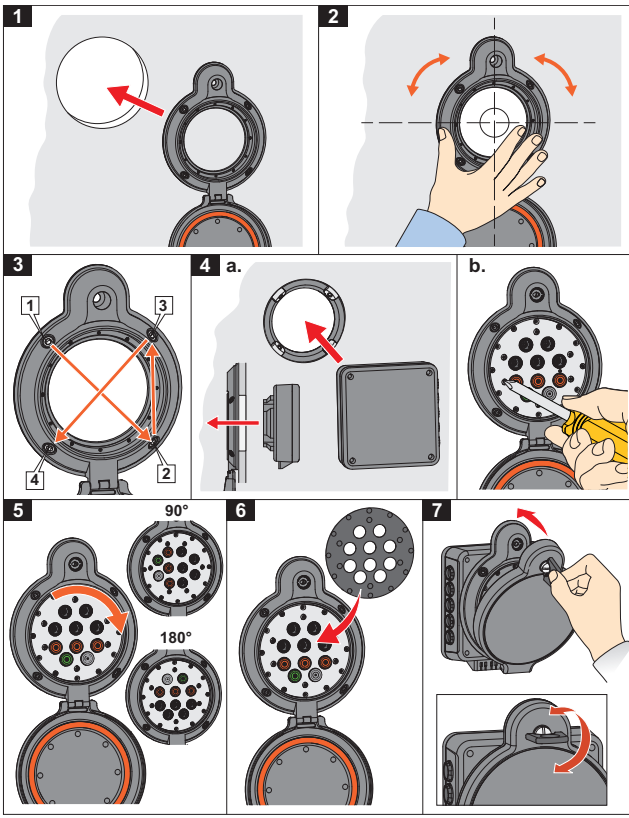

Figure 4. Installation

Voltage Connections

To make voltage connections:

1. On the Feed-Through Box, loosen the screws and remove the lid.
2. In the electrical enclosure, make the voltage measurement connections with the rated wires for phase A/L1, B/L2, C/L3, Neutral N, and Protective Earth PE. Use the color codes that match the local requirements.

   Note

   Make sure to install a circuit breaker that is rated for the wire gauge.

3. Strip 10 mm of the insulation. Use a crimp ferrule for stranded wires.
4. Push the wire into the circular opening of the terminal.

   Note

   To remove the wire, push a 3.5 mm slotted screwdriver into the rectangular opening of the terminal and pull out the wire.

5. Fasten the wires with cable ties.
6. Replace the lid and tighten the screws.

Current Connections

To make current connections.

1. Apply the iFlex or clamp around the phase wire to measure. See Figure 5. Make sure that the arrow on the current sensor matches the current flow direction.

   ⚠⚠ Warning

   To prevent possible electrical shock, fire, or personal injury, read and follow the safety instructions for the iFlex or current clamp accessory.

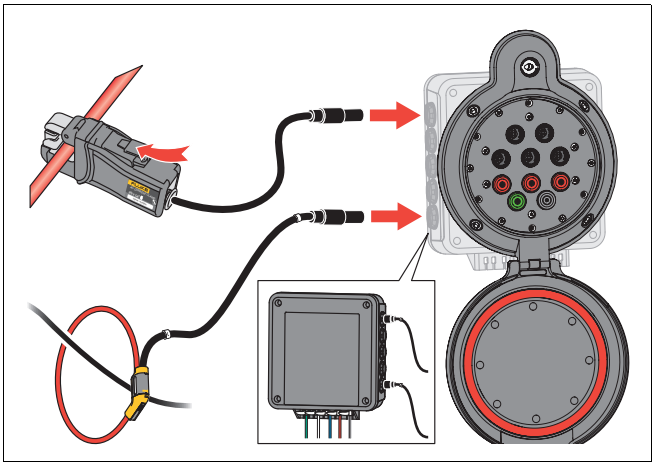

Figure 5. Current Connections

2. Secure the excess cable. Do not cut or alter the cable length.
3. Connect the plugs into the sockets on the PQ Window. Verify connections to the correct phase. Use the BNC-to-4 pin male cables for current sensors with BNC output.
4. On the current test leads, apply cable marker 1 from the set (see Figure 1, item ❻) on both ends of the cable for phase A/L1. Continue with marker 2 for phase B/L2, and marker 3 for phase C/L3 and N and Earth/Ground.
5. Refer to local regulations to perform all required tests that validate safe operation.
6. Close the electrical enclosure.

Note

Do not pinch or damage the wires and cables connected to the PQ Window when you close the door.

7. Do a functional test for measurements. See *Measurements*.

Measurements

To make measurements:

1. Twist the quarter-turn fastener from the horizontal position to the vertical position to unlatch the door.
2. Use the voltage test lead included with the measurement instrument to connect the voltage output sockets of the PQ Window with the instrument.

   Note

   The PQ Window allows power from the voltage output sockets to the measurement instrument up to 100 VA.

   ⚠ Caution

   Make sure the Measurement Category rating of the measurement instrument and accessories matches or exceeds the rating of the installation.
3. Use the current test lead to connect the current measurement signal output of the PQ Window with the measurement instrument.

   Note

   Use the BNC-to-4 pin male 2 m or 0.1 m cable for Loggers with BNC input. Flexis or clamps supported by the Logger are required. Using Flexis or clamps for 17xx on Loggers with BNC input results in incorrect readings.
4. Do the measurement. See the users manual for the measurement instrument for more information.

   Note

   While the door is opened the ingress protection is IP50/NEMA TYPE 1.

Maintenance

Product maintenance consists of fuse replacement.

⚠⚠ Warning

To prevent shock, injury, or damage to the Product:

- **De-energize the circuit before opening the case.**
- **Make sure the circuit is secure against reenergizing of the installation.**
- **Use only specified replacement fuses.**

Fuse Replacement

To replace a fuse:

1. De-energize the installation.
2. Loosen the four case bottom screws. See Figure 6.
3. Remove the case bottom.
4. Replace any blown fuses.
5. Reposition the case bottom and tighten the screws.

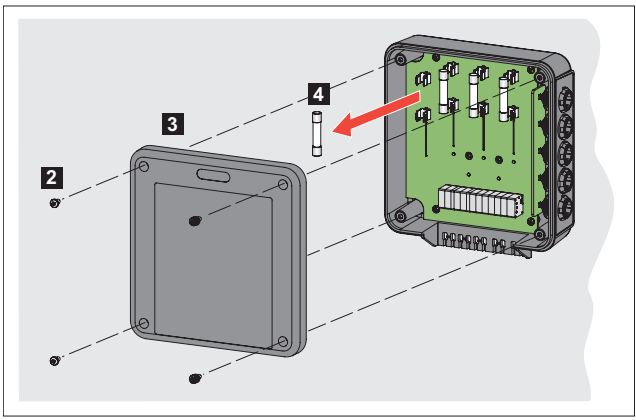

Figure 6. Fuse Replacement

Cleaning

⚠⚠ Warning

To prevent possible electrical shock, fire, or personal injury, do not clean the PQ Window while connected to hazardous live voltage.

Clean the Product with a soft cloth, mild soap, and water. To prevent damage, do not clean with abrasives or solvents.

Specifications

Maximum voltage between any Voltage terminal and Earth Ground ..... 1000 V

Maximum voltage between any Current terminal and Earth Ground ..... 30 V

Safety

General ..... IEC 61010-1: Pollution Degree 2

Measurement ..... IEC 61010-2-030: CAT IV 600 V / CAT III 1000 V

Dimensions

Outside ..... 148 mm x 187 mm x 23 mm (W x H x D) (148 mm x 370 mm x 19 mm with cover opened)

Inside ..... 140 mm x 158 mm x Di (W x H x D) D_i = 58 – thickness of panel door in mm.

Supported Electrical Enclosures

UL 50/NEMA Environmental

Enclosure ..... Type 1 (Type 12 when PQ Window cover is closed)

Panel Thickness ..... max. 3.5 mm (10 gauge)

Environment

Temperature

Operating/Storage ..... -25 °C to 60 °C (-13 °F to 140 °F)

Humidity ..... 10 % to 90 % in dependency of temperature according to IEC 60721-3-3 Class 3K6 (modified):
-25 °C to 35 °C: 10 % to 90 %,
50°C: max. 35 %,
60°C: max. 23 %

Altitude

Operating..... 2000 m (up to 4000 m derate to CAT II 1000 V, CAT III 600 V, CAT IV 300 V)

Storage..... 12 000 m

Ingress Protection

Rating ..... IEC 60529: IP67 with cover closed IP50 with cover opened and all connectors attached

Vibration..... MIL-PRF28800F: Random Vibration Class 2

Weight ..... 2.1 kg (4.6 lb)

Voltage

Input

Number of inputs ..... 5 (A/L1, B/L2, C/L3, N, and Earth/ Ground)

Wire gauge ..... solid/flexible: 0.25 mm² to 1.5 mm² (AWG 24 to AWG 16)

Voltage ..... max. 1000 V

Fuse..... 2 A 1000 V 1.5 A²s, 10 kA IR (A/L1, B/L2, C/L3, N)

Output

Connectors ..... 5x 4 mm safety terminals, 3x red for A/L1, B/L2, C/L3, 1x black for N, 1x green for Earth/Ground

Load Current..... max. 1 A rms

Current Input/Output Connectors ..... 5x 4-pin circular compatible with Fluke 354x FC, 173x, and 174x Power and Power Quality Loggers

LIMITED WARRANTY AND LIMITATION OF LIABILITY

This Fluke product will be free from defects in material and workmanship for one year from the date of purchase. This warranty does not cover fuses, disposable batteries, or damage from accident, neglect, misuse, alteration, contamination, or abnormal conditions of operation or handling. Resellers are not authorized to extend any other warranty on Fluke's behalf. To obtain service during the warranty period, contact your nearest Fluke authorized service center to obtain return authorization information, then send the product to that Service Center with a description of the problem.

THIS WARRANTY IS YOUR ONLY REMEDY. NO OTHER WARRANTIES, SUCH AS FITNESS FOR A PARTICULAR PURPOSE, ARE EXPRESSED OR IMPLIED. FLUKE IS NOT LIABLE FOR ANY SPECIAL, INDIRECT, INCIDENTAL OR CONSEQUENTIAL DAMAGES OR LOSSES, ARISING FROM ANY CAUSE OR THEORY. Since some states or countries do not allow the exclusion or limitation of an implied warranty or of incidental or consequential damages, this limitation of liability may not apply to you.

11/99