FIRST ALERT®

INSTALLATION OF ADAPTER PLUG

⚠DANGER!
ELECTRICAL SHOCK HAZARD. Turn off power to the area where you will install this unit at the circuit breaker or fuse box before beginning installation. Failure to turn off the power before installation may result in serious electrical shock, injury or death.

Verify which **COMPATIBLE MODELS** are installed in your system to determine the Adapter Plug to use.

COMPATIBLE MODELS

The ADN-12 adapter is compatible with the SC5 AC hardwired First Alert and BRK Alarms.
- Maximum of 18 units total may be interconnected (Maximum of 12 smoke alarms).

The adapter plug which fits your current Nest Protect alarm power connector.

Adapter Plug (ADN) Diagram

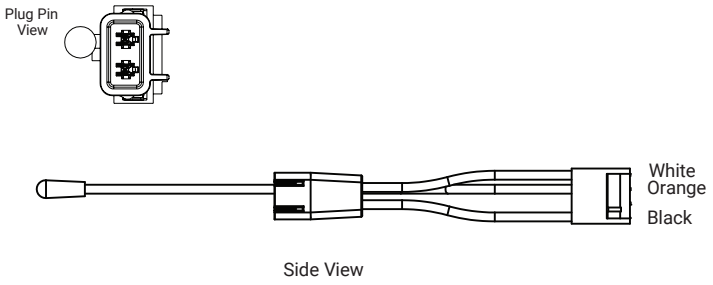

⚠WARNING!
- Installation of this unit must conform to the electrical codes in your area; Article 760 of NFPA 70 (NEC), NFPA 72, NFPA 101; SBC (SBCCI); UBC (ICBO); NBC (BOCA); OTFDC (CABO), and any other local or building codes that may apply. Wiring and installation must be performed by a licensed electrician. Failure to follow these guidelines may result in injury or property damage.
- This unit must be powered by a 24-hour, 120VAC pure sine wave 60Hz circuit. Be sure the circuit cannot be turned off by a switch, dimmer, or ground fault circuit interrupter. Failure to connect this unit to a 24-hour circuit may prevent it from providing constant protection.

INSTALLATION INSTRUCTIONS

1. Turn off AC Power.
2. Remove unit. Remove old mounting bracket.
3. Install new mounting bracket.
4. Connect the black end of the appropriate Adapter Plug to the existing power connector. **NOTE: There may not be enough room for the Adapter Plug and additional wiring to fit in the junction box. If not, the old power connector must be removed and replaced with the BRK® Power Connector.**
5. Connect the other end of the Adapter Plug to First Alert®/BRK® Alarm.
6. Check all connections. Make sure all plugs are completely connected and snapped together. Ensure the Adapter Plug is securely connected to the existing Power Connector.
7. Install the base of the Alarm to the mounting bracket.
8. Restore power to the junction box.

⚠DANGER!
ELECTRICAL SHOCK HAZARD. Do not restore power until all Smoke Alarms are completely installed. Restoring power before installation is complete may result in serious electrival shock, injury or death.

⚠DANGER!
If any unit in the series does not alarm, TURN OFF POWER and recheck connections. RESTORE POWER.
If any unit within interconnected alarms does not alarm, replace it immediately.

9. Test each Alarm. Press and hold the test button until the unit alarms. When testing a series of interconnected units you must test each unit individually. Make sure all units alarm when each one is tested.

The Parts of This Installation

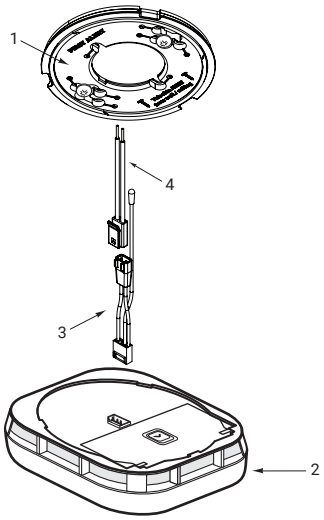

1 Mounting Bracket
2 First Alert®/BRK® Alarm
3 ADN Adapter
4 Existing compatible power connector

Electrical Rating:
120V AC, 100mA Maximum
Not for Current Interruption

IMPORTANT!
Interconnect units within a single family residence only. Otherwise all households will experience unwanted alarms when you test any unit in the series. Interconnected units will only work if they are wired to compatible units and all requirements are met. This unit is designed to be compatible with First Alert® and BRK Electronics® Models listed in the User's Manual.
Interconnected units must meet ALL of the following requirements:
- A maximum of 18 compatible units may be interconnected (Maximum of 12 smoke alarms).
- The same fuse or circuit breaker must power all interconnected units.
- The total length of wire interconnecting the units should be less than 1000 feet (300 meters). The interconnected wire should be #18 gauge or larger, rated at least 300V. if an interconnect wire is not already part of your household wiring, you will need to install one. This type of wire is commonly available at Hardware and Electrical Supply stores.
- All wiring must conform to all local electrical codes and Article 760 of NFPA 70 (NEC). Refer to NFPA 70, NFPA 101, and/or your local building code for further connection requirements.

⚠WARNING!
- Failure to meet any of the above requirements could damage the units and cause them to malfunction, removing your protection.
- AC and AC/DC Alarms can be interconnected. Under AC power, all units will alarm when one senses smoke. When power is interrupted, only the AC/DC units win the series will continue to send and receive signals. AC powered alarms will not operate.

Refer to the Alarm User's Manual for all other information, instructions and warnings.

RECOGNIZED COMPONENT

CONFORMS TO UL STANDARD 1977

Intertek
5009450

US Patent No.: 6,641,433 B2.

© 2025 Resideo Technologies, Inc. All rights reserved. These products are manufactured by Resideo Technologies, Inc. and its affiliates. • 3901 Liberty Street, Aurora, IL 60504-8122 • Customer Service Team: (800) 323-9005 • www.firstalert.com • www.brkelectronics.com

Printed in Mexico M08-0794-000 **H2** Rev A 5/25