# FIRMAN® QUICK START / STOP GUIDE

**The Quick Start / Stop Guide is not a substitute for reading the manual. The manual includes instructions that you must follow to use the product safely.**

## INCLUDED ITEMS

Hose Holder (Not Shown)

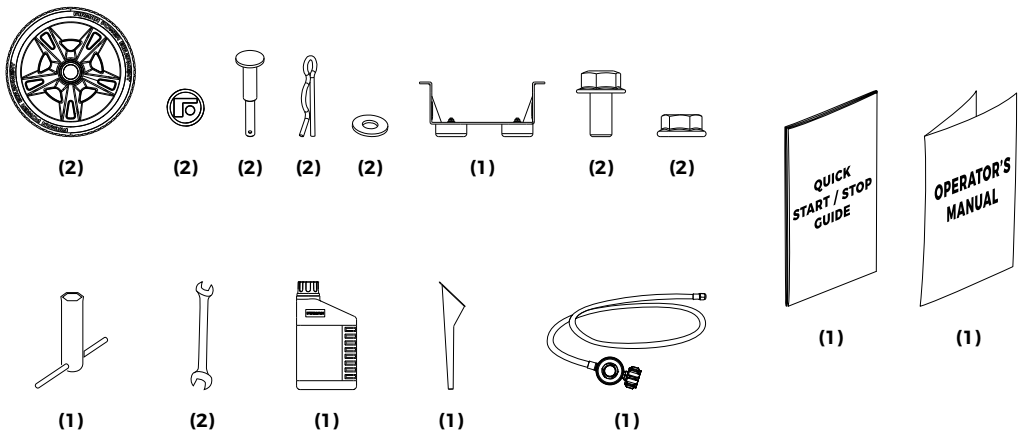


## INSTALL THE WHEEL KIT

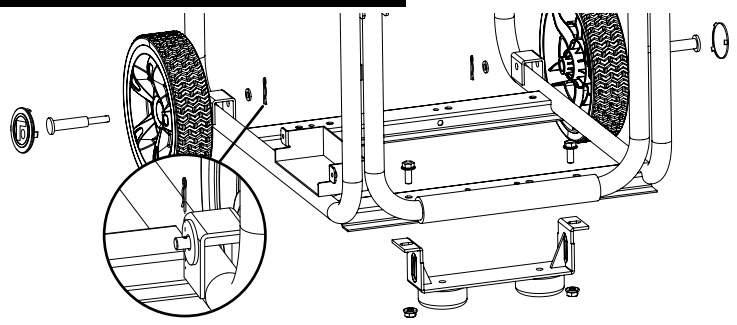

## REMOVE SHIPPING BRACKET

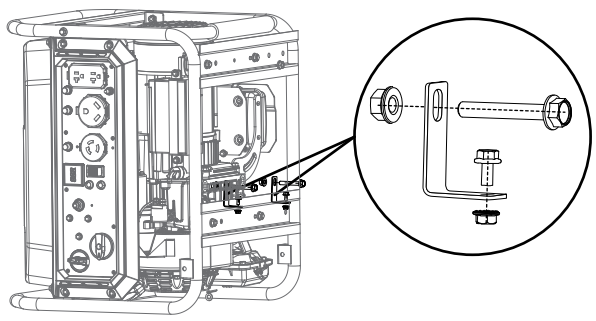

## PREVENT CARBON MONOXIDE (CO) POISONING

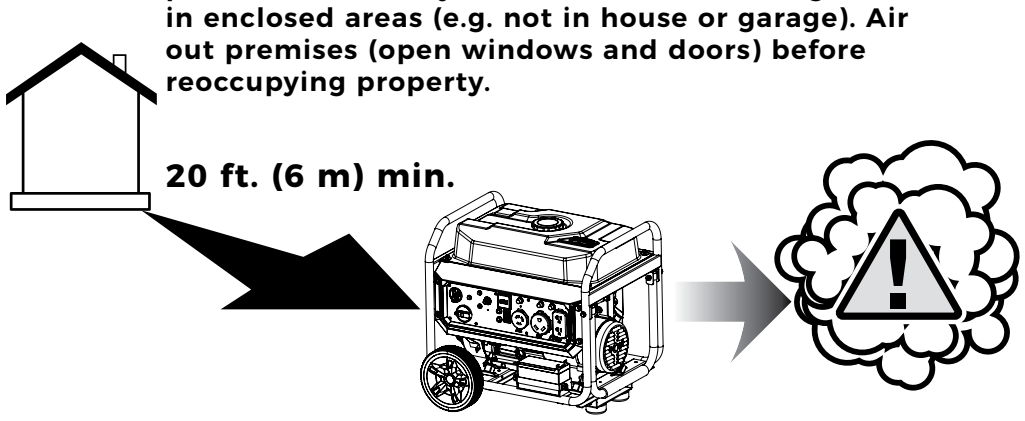


## BATTERY CABLE CONNECTION

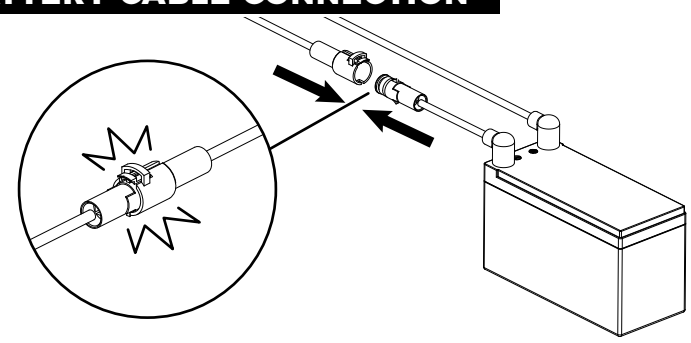

## START

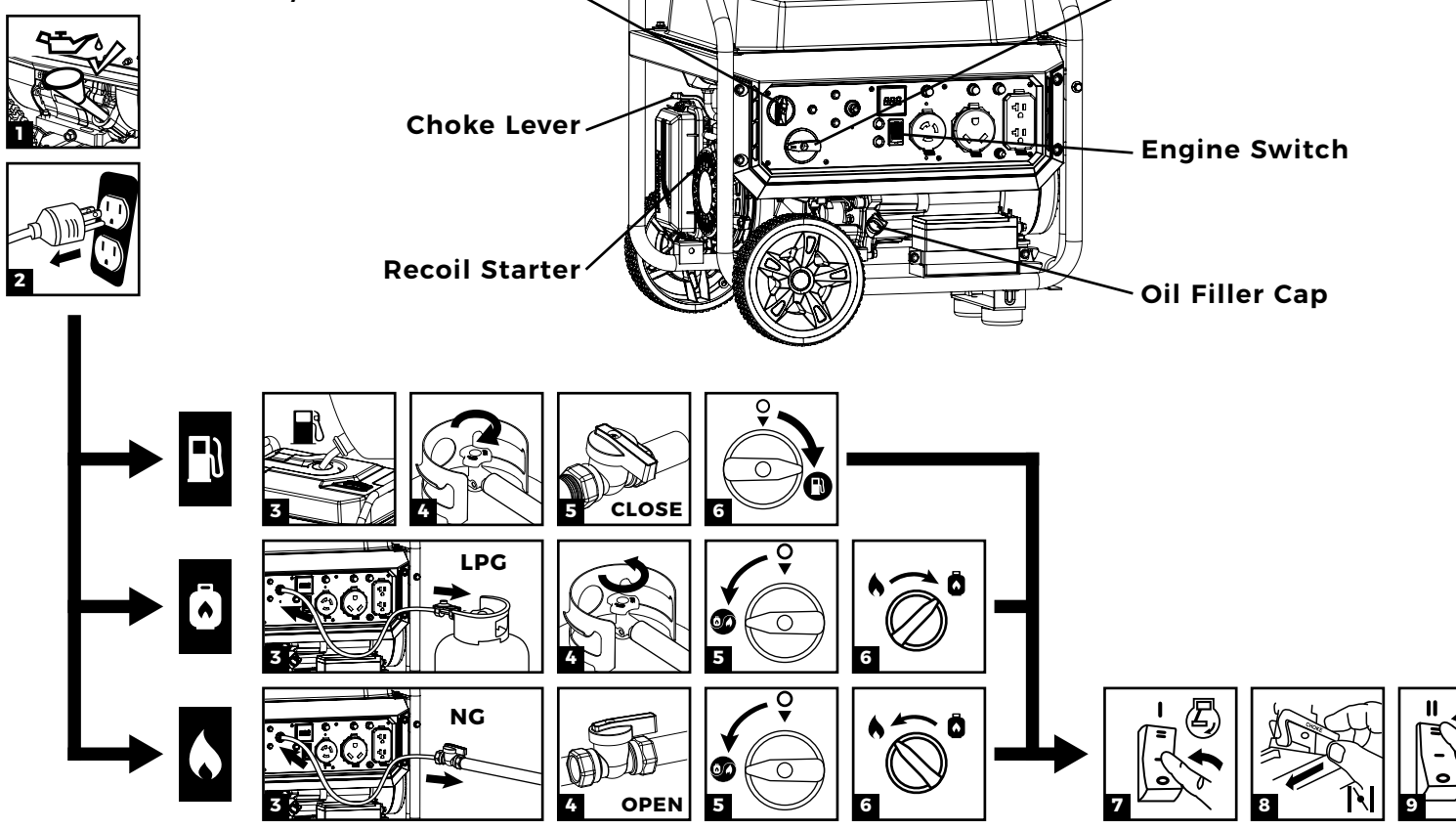


## STOP

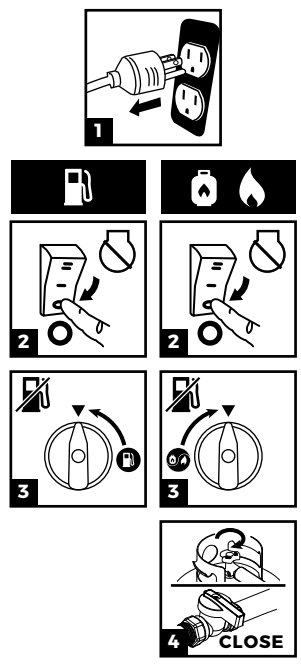


## TO RESTORE POWER USING EXTENSION CORDS

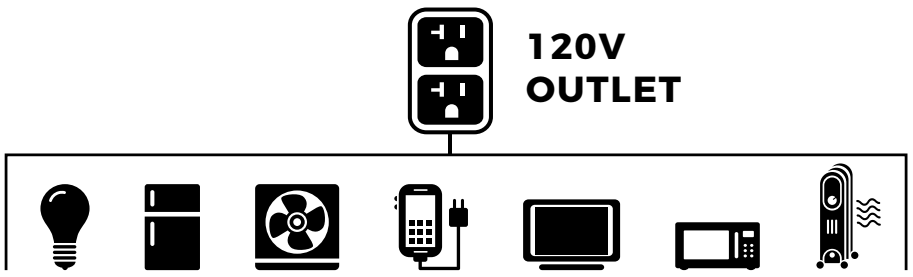


1. Only use grounded cords marked for outdoor use rated for your loads.
2. Follow cord safety instructions.
3. Install carbon monoxide alarm(s).
4. When operating portable generator with extension cords, make sure portable generator is located in an open, outdoor area, at least 20 ft. (6 m) from occupied spaces with exhaust pointed away.
5. Extension cords running directly into your home, powering indoor items IS NOT RECOMMENDED.

DANGER! Engine exhaust contains carbon monoxide, a poisonous gas that will kill you in minutes. You cannot smell it, see it, or taste it. Even if you do not smell exhaust fumes, you could still be exposed to carbon monoxide gas.

- Extension cords running directly into the home increase your risk of carbon monoxide poisoning through any openings.
- If an extension cord running directly into your home is used to power indoor items, the operator recognizes that this increases the risk of CO poisoning to people inside the home and assumes that risk.