FIRMAN® QUICK START / STOP GUIDE

The Quick Start / Stop Guide is not a substitute for reading the manual. The manual includes instructions that you must follow to use the product safely.

INCLUDED ITEMS

Hose Holder (Not Shown)

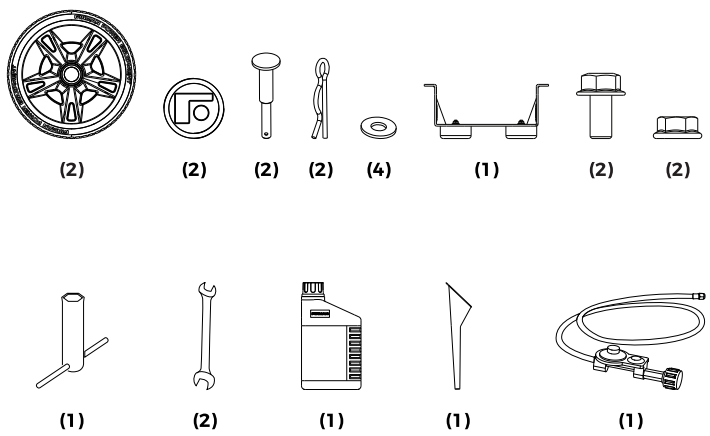

INSTALL THE WHEEL KIT

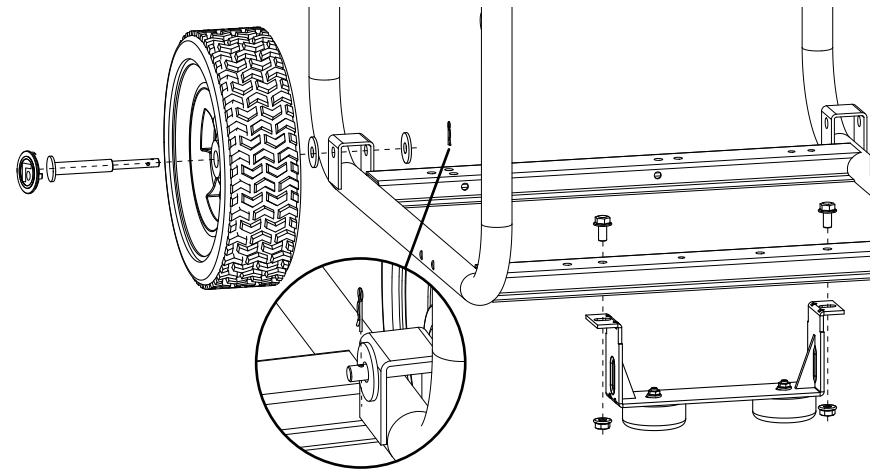

PREVENT CARBON MONOXIDE (CO) POISONING

Use outdoors at least 20 ft. (6 m) from any home.
Point exhaust away from all homes and occupied spaces.
Install CO alarms inside your home.



BATTERY CABLE CONNECTION

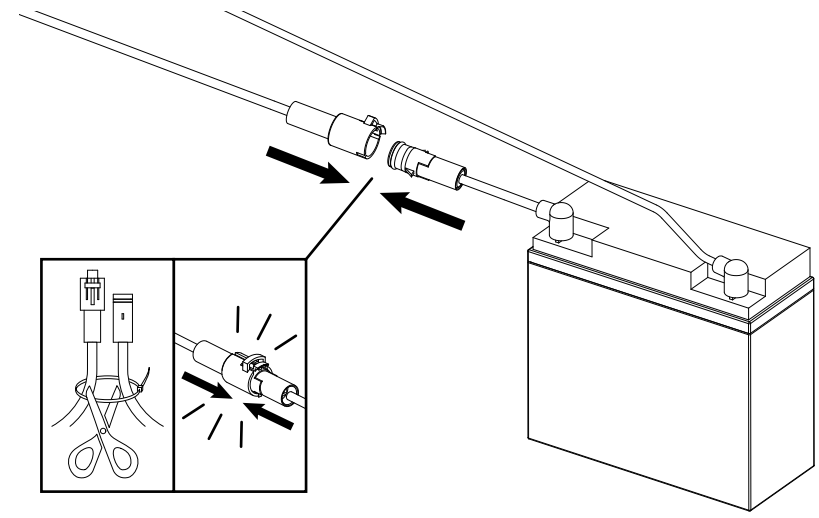

START

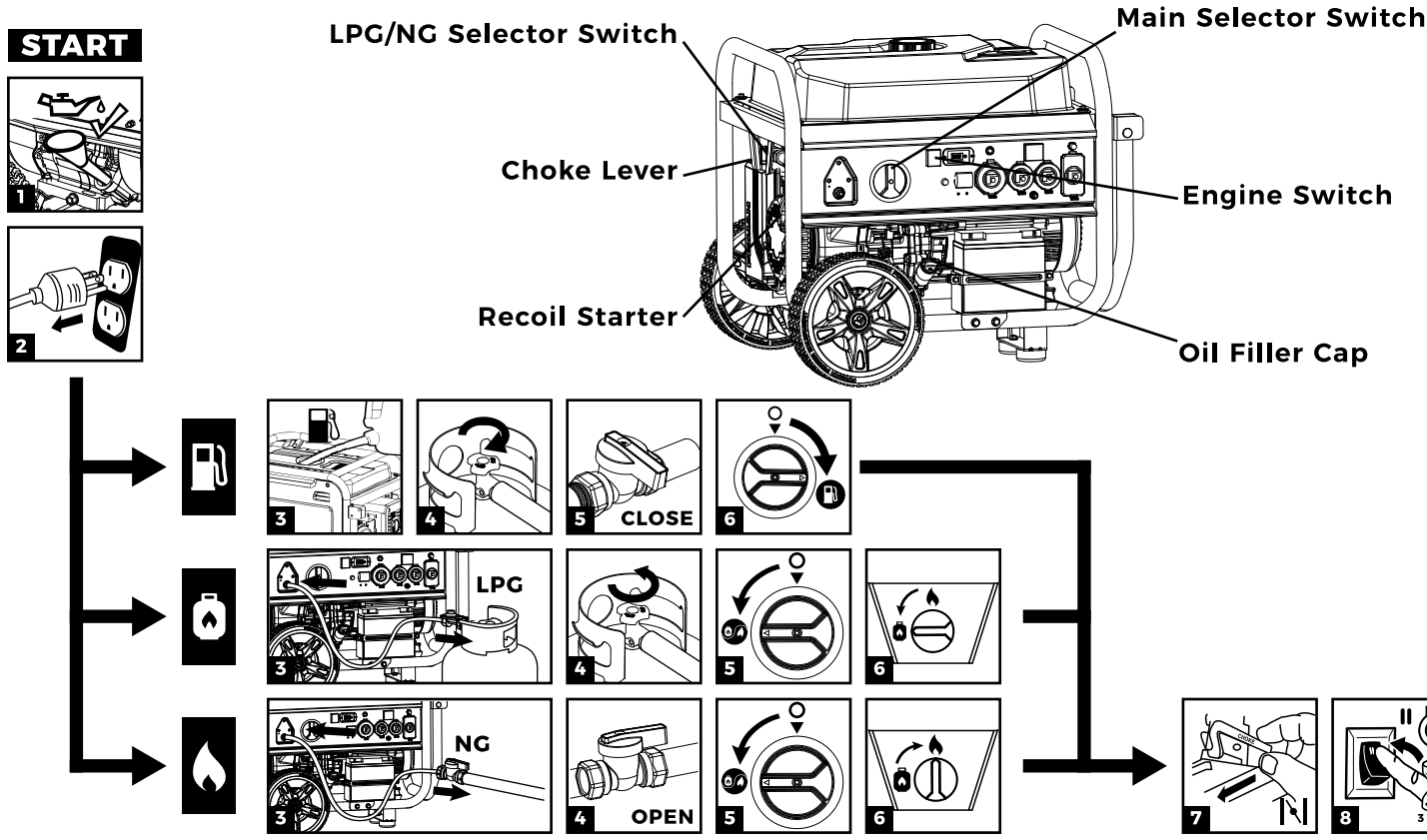

STOP

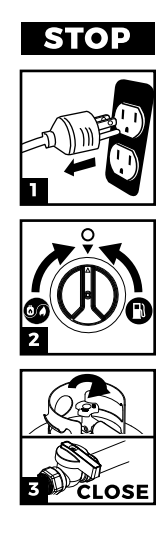

TO RESTORE POWER USING EXTENSION CORDS

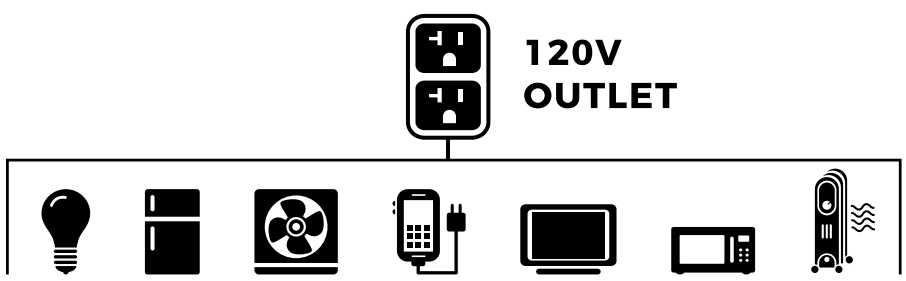

1. Only use grounded cords marked for outdoor use rated for your loads.
2. Follow cord safety instructions.
3. Install carbon monoxide alarm(s).
4. When operating portable generator with extension cords, make sure portable generator is located in an open, outdoor area, at least 20 ft. (6 m) from occupied spaces with exhaust pointed away.
5. Extension cords running directly into your home, powering indoor items IS NOT RECOMMENDED.
6. Install a listed* transfer switch as soon as possible if this or any generator will be used to restore power to your home.

DANGER! Engine exhaust contains carbon monoxide, a poisonous gas that will kill you in minutes. You cannot smell it, see it, or taste it. Even if you do not smell exhaust fumes, you could still be exposed to carbon monoxide gas.

- Extension cords running directly into the home increase your risk of carbon monoxide poisoning through any openings.
- If an extension cord running directly into your home is used to power indoor items, the operator recognizes that this increases the risk of CO poisoning to people inside the home and assumes that risk.

* Certified by a Nationally Recognized Testing Laboratory that the product complies to appropriate product safety test standards.