FIRMAN® QUICK START / STOP GUIDE

The Quick Start / Stop Guide is not a substitute for reading the manual. The manual includes instructions that you must follow to use the product safely.

INCLUDED ITEMS

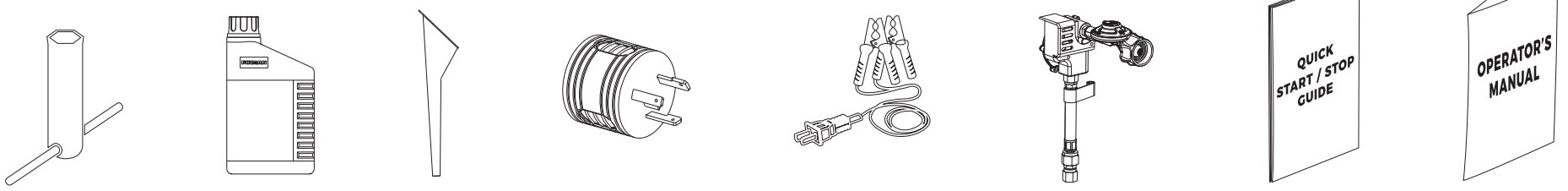

(1) (1) (1) (1) (1) (1) (1) (1)

PREVENT CARBON MONOXIDE (CO) POISONING

Move generator to an open outdoor area downwind, point exhaust away from homes. Don't run generator in enclosed areas (e.g. not in house or garage). Air out premises (open windows and doors) before reoccupying property.

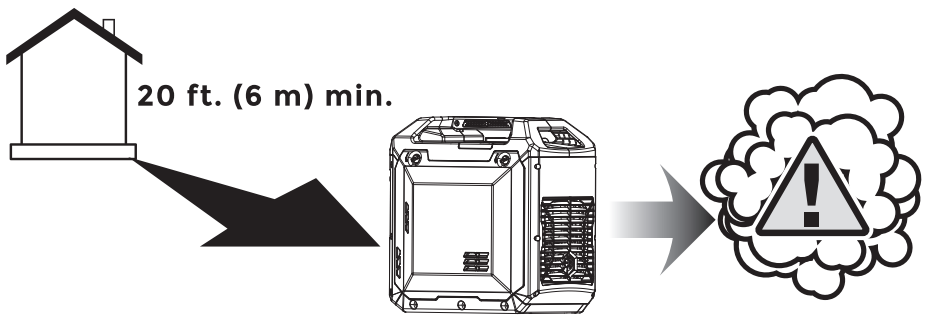

BATTERY CABLE CONNECTION

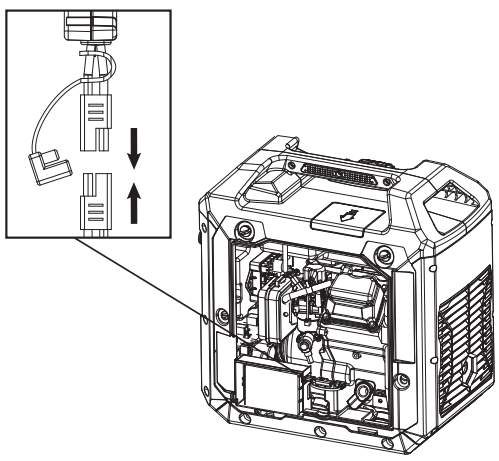

NG OPERATION INSTRUCTIONS

1. The LPG regulator ❷ must be disassembled from the assembly regulator ❶ .
2. The adapter ❸ must also be disconnected from the assembly regulator ❶ .
3. Fix regulator ❹ to the generator handle with a velcro strap ❺.

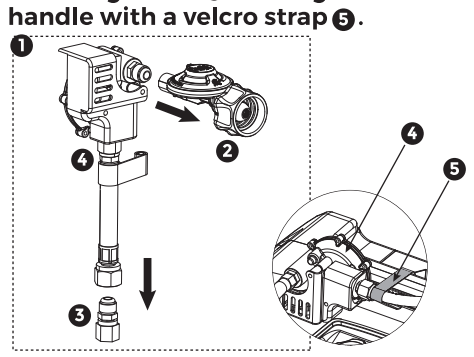

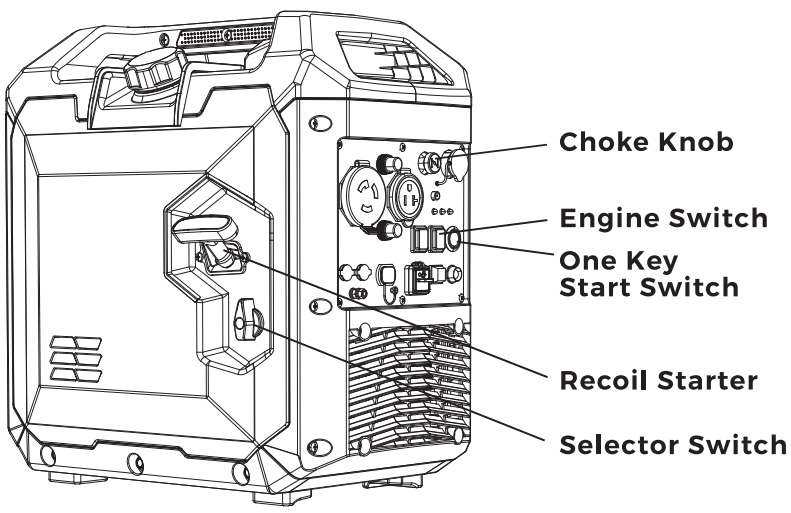

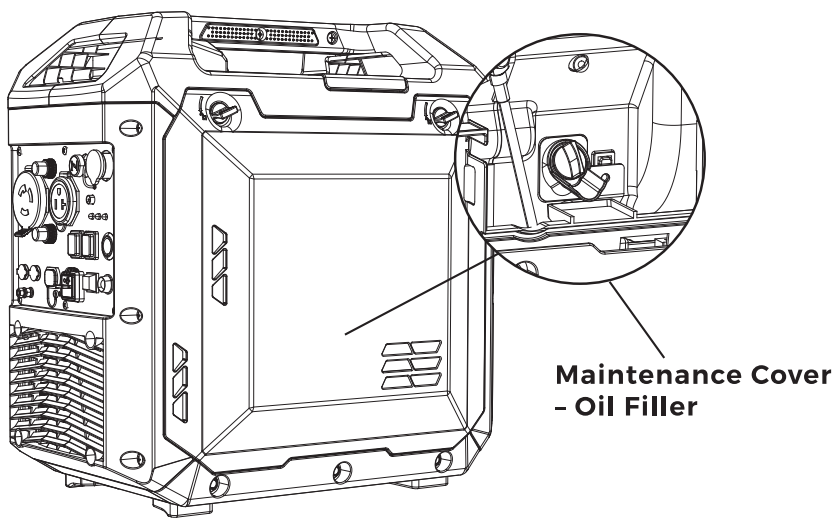

START

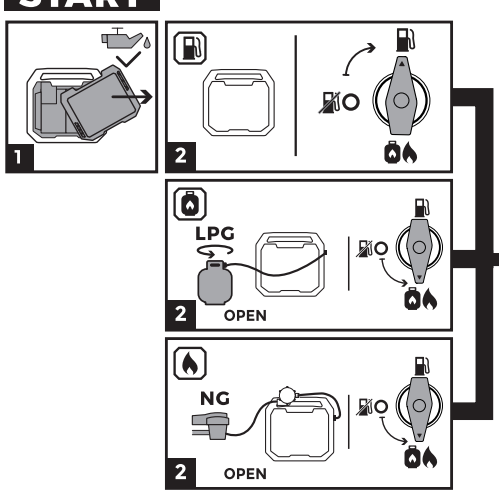

STOP

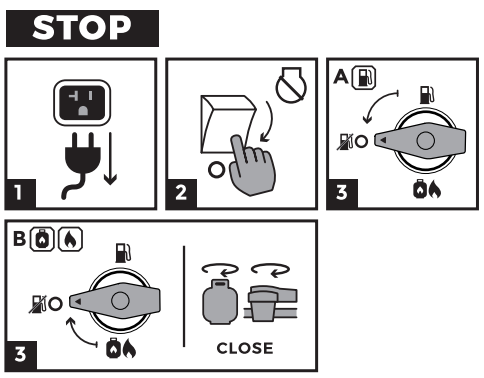

TO RESTORE POWER USING EXTENSION CORDS

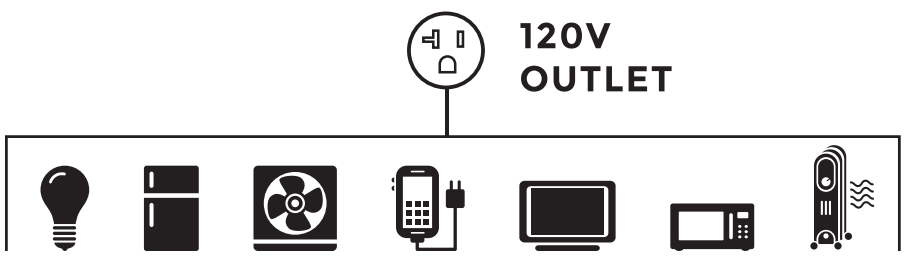

1. Only use grounded cords marked for outdoor use rated for your loads.
2. Follow cord safety instructions.
3. Install carbon monoxide alarm(s).
4. When operating portable generator with extension cords, make sure portable generator is located downwind in an open, outdoor area, at least 20 ft. (6 m) from occupied spaces with exhaust pointed away.
5. Extension cords running directly into your home, powering indoor items IS NOT RECOMMENDED.

DANGER! Engine exhaust contains carbon monoxide, a poisonous gas that will kill you in minutes. You cannot smell it, see it, or taste it. Even if you do not smell exhaust fumes, you could still be exposed to carbon monoxide gas.

- Extension cords running directly into the home increase your risk of carbon monoxide poisoning through any openings.
- If an extension cord running directly into your home is used to power indoor items, the operator recognizes that this increases the risk of CO poisoning to people inside the home and assumes that risk.

333831079 Rev01