QUICK START/STOP GUIDE

The Quick Start / Stop Guide is not a substitute for reading the manual.
The manual includes instructions that you must follow to use the product safely.

PREVENT CARBON MONOXIDE(CO)POISONING AND FIRES

Use outdoors and downwind at least 20 ft. (6.0 m) from any home.
Point exhaust away from all homes and occupied spaces
Install CO alarms inside your home.

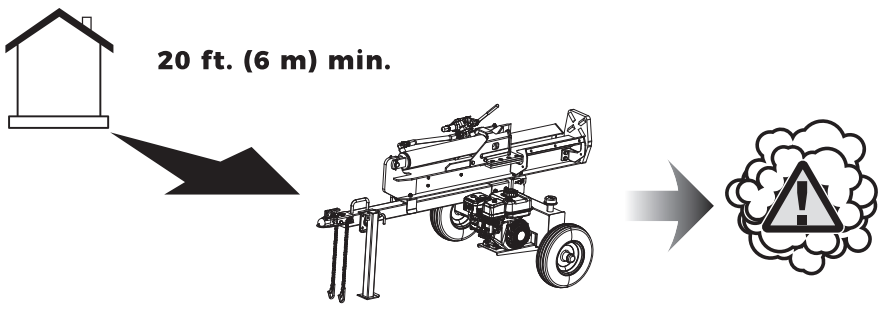

Keep log splitter at least 5 ft. (1.5 m) from any structure, trees or vegetation over 12 in. (30 cm) in height.

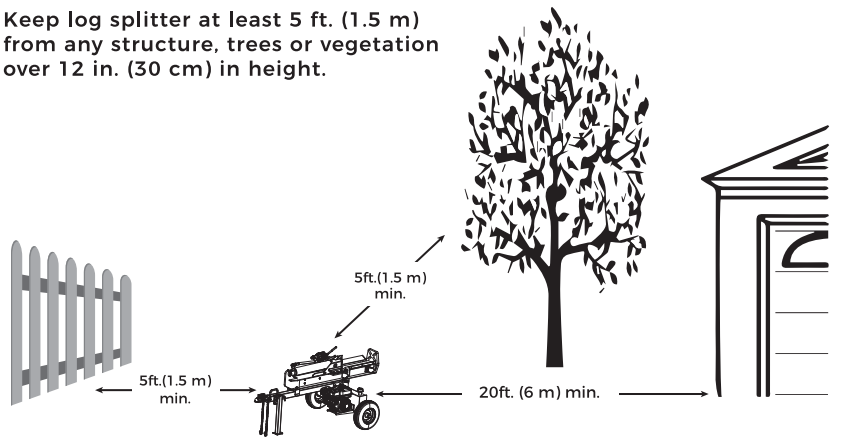

⚠ CAUTION:

PLEASE CHECK BEFORE STARTING:

1. Engine oil & Fuel & Hydraulic oil.
2. Verify that the valve handle is in the NEUTRAL POSITION.

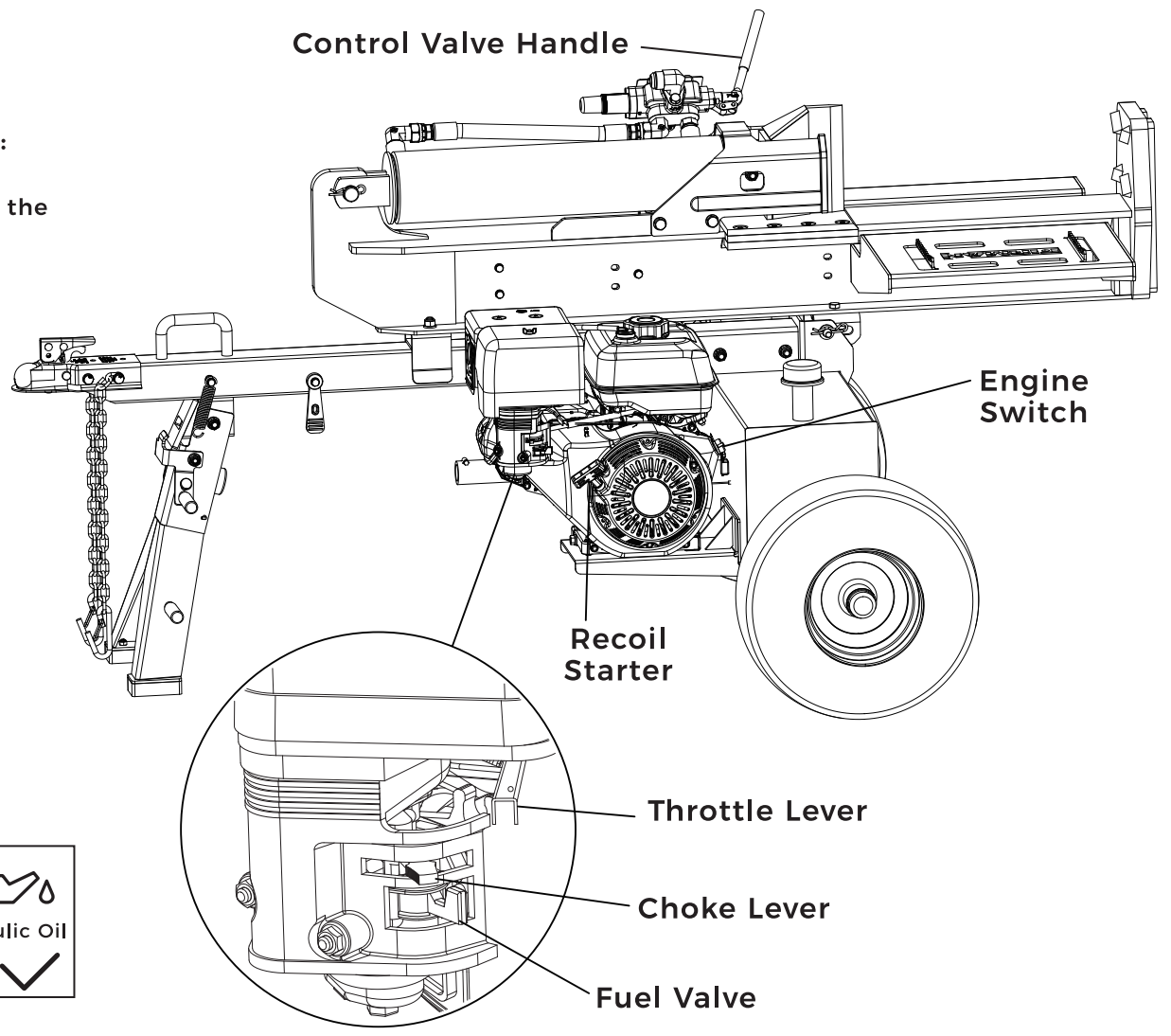



START

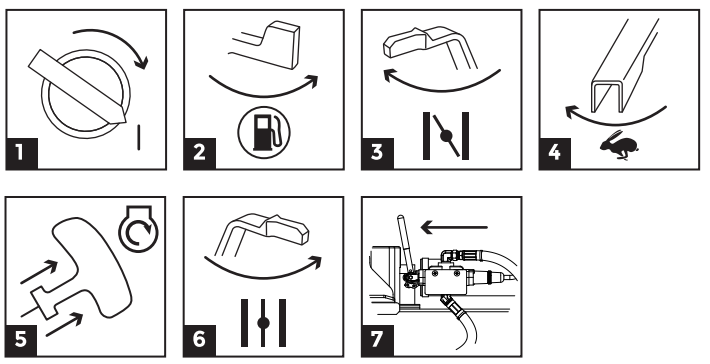

STOP

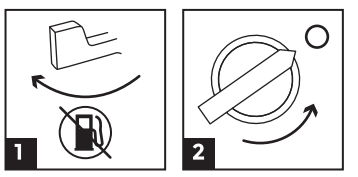



DANGER! Engine exhaust contains carbon monoxide, a poisonous gas that will kill you in minutes.
You cannot smell it, see it, or taste it. Even if you do not smell exhaust fumes, you could still be exposed to carbon monoxide gas.