F I A T 1 2 4 S P I D E R



3 . 0 R A D I O B O O K

CONTENTS

INTRODUCTION 2

TIPS, CONTROLS, AND GENERAL INFORMATION 2

- Tips 2
- Road Safety 2
- Reception Condition 2
- Care And Maintenance 3
- Important Information 3
- Antenna 3
- Cybersecurity 4

OPERATING TIPS FOR AUDIO SYSTEM 5

RADIO RECEPTION 5

- AM Characteristics 5
- FM Characteristics 5

OPERATING TIPS FOR MP3 . . . 6

OPERATING TIPS FOR WMA . . 7

OPERATING TIPS FOR AAC . . . 7

OPERATING TIPS FOR OGG . . . 7

OPERATING TIPS FOR USB DEVICE — IF EQUIPPED 8

OPERATING TIPS FOR IPOD . . . 9

FRONT PANEL 10

POWER/VOLUME SOUND CONTROLS 11

- Power ON/OFF 11
- Volume Adjustment 11
- Audio Sound Adjustment 11

CLOCK 12

- Setting The Time 12
- Time Resetting 13

OPERATING THE RADIO 13

- Radio ON 13
- Band Selection 13
- Tuning 13

HOW TO USE AUXILIARY JACK/ USB PORT — IF EQUIPPED . . 14

AUDIO CONTROL SWITCH OPERATION 14

- Adjust The Volume 14
- Seek Switch 15
- USB Audio/Bluetooth Audio — If Equipped 15
- Mute Switch 15

AUX/USB/IPOD MODE 15

- How To Connect USB Port/Auxiliary Jack 16
- How To Use AUX Mode 17
- How To Use USB Mode — If Equipped 17
- How to Use iPod Mode 19

BLUETOOTH 22

- Bluetooth Hands-Free Outline . . . 22
- Bluetooth Audio Outline 22
- Component Parts 23
- Bluetooth Preparation 27
- Available Language 32
- Voice Recognition 33
- Security Settings 34
- Voice Recognition Learning Function (Speaker Enrollment) 36
- Making A Call 37
- Receiving An Incoming Call 41
- Hanging Up A Call 41
- Mute 41
- Transferring A Call From Hands-Free To A Device (Mobile Phone) 42
- Transferring A Call From A Device (Mobile Phone) To Hands-Free . . 42
- DTMF (Dual Tone Multi-Frequency Signal) Transmission 43
- Bluetooth Audio 44
- How To Use The Bluetooth Audio System 46
- Bluetooth Audio Device Information Display 46

TROUBLESHOOTING 47

- Bluetooth Device Pairing (Connection Problems) 47
- Voice Recognition Related Problems 49
- Regarding Problems With Calls . . 49
- Other Problems 50

INTRODUCTION

The vehicle is equipped with an audio system designed around the many functions of the passenger compartment and the style of the dashboard.

The system is installed in an easily accessible position for the driver and passenger, and controls can be quickly located from the graphical display on the front, making the device easy to use.

The instructions for use are given below and we recommend you read them carefully and always keep them in hand (for example, in the glove compartment).

Enjoy reading. Happy motoring!

TIPS, CONTROLS, AND GENERAL INFORMATION

Tips



Warning!

❒ Follow the safety rules below. Otherwise serious injuries may occur to the occupants or the system may be damaged.

❒ If the volume is too loud, this can be dangerous. Adjust the volume so that you can still hear background noises (e.g. horns, ambulances, police vehicles, etc).

Road Safety

Read the instructions for the system carefully before operating your vehicle.

Reception Condition

Reception conditions change constantly while driving. Reception may be interrupted by the presence of mountains, buildings or bridges, especially when you are far away from the broadcaster.

Note: The volume may be increased when receiving traffic alerts and news.

Care And Maintenance

Caution!

❒ Only clean the front panel and the display with a soft, clean, dry, anti-static cloth. Cleaning and polishing products may damage the surface. Do not use alcohol or similar products to clean the panel or the display.

❒ Do not use the display as a base for supports with suction pads or adhesives for external navigators or smartphones or similar devices.

❒ The display lens should not come into contact with pointed or rigid objects, which could damage its surface. Use a soft, dry anti-static cloth to clean and do not press.

❒ Never use alcohol, petrols and derivatives to clean the display lens.

❒ Prevent any liquid from entering the system: this could damage it beyond repair.

Important Information

In the event of a fault, the system must only be checked and repaired by an authorized dealer.

If the temperature is low, the display may take time to reach optimum brightness.

If the vehicle is stopped for a while and the external temperature is very high, the system may go into “thermal protection” mode, suspending operation until the radio temperature returns to acceptable levels.

Antenna

To remove the antenna, turn it counterclockwise.

To install the antenna, turn it clockwise. Make sure the antenna is securely installed.



GUID-06020105121001

Caution!

❒ To prevent damage to the antenna, remove it before passing beneath a low overhead clearance.

❒ When leaving your vehicle unattended, we recommend that you remove the antenna and store it inside the vehicle.

Cybersecurity

Your vehicle may be a connected vehicle and may be equipped with both wired and wireless networks. These networks allow your vehicle to send and receive information. This information allows systems and features in your vehicle to function properly.

Your vehicle may be equipped with certain security features to reduce the risk of unauthorized and unlawful access to vehicle systems and wireless communications. Vehicle software technology continues to evolve over time and FCA US LLC, working with its suppliers, evaluates and takes appropriate steps as needed. Similar to a computer or other devices, your vehicle may require software updates to improve the usability and performance of your systems or to reduce the potential risk of unauthorized and unlawful access to your vehicle systems.

The risk of unauthorized and unlawful access to your vehicle systems may still exist, even if the most recent version of vehicle software (such as Connect software) is installed.

Warning!

❒ It is not possible to know or to predict all of the possible outcomes if your vehicle's systems are breached. It may be possible that vehicle systems, including safety related systems, could be impaired or a loss of vehicle control could occur that may result in an accident involving serious injury or death.

❒ ONLY insert media (e.g., USB or SD card) into your vehicle if it came from a trusted source. Media of unknown origin could possibly contain malicious software, and if installed in your vehicle, it may increase the possibility for vehicle systems to be breached.

❒ As always, if you experience unusual vehicle behavior, take your vehicle to your nearest authorized dealer immediately.

Note:

❒ FCA US LLC or your dealer may contact you directly regarding software updates.

❒ To help further improve vehicle security and minimize the potential risk of a security breach, vehicle owners should:

– Routinely check www.driveuconnect.com/software-update to learn about available Uconnect software updates.
– Only connect and use trusted media devices (e.g. personal mobile phones or USBs).

Privacy of any wireless and wired communications cannot be assured. Third parties may unlawfully intercept information and private communications without your consent.

OPERATING TIPS FOR AUDIO SYSTEM

Warning!

ALWAYS drive safely with your hands on the wheel. You have full responsibility and assume all risks related to the use of the features and applications in this vehicle. Only use these features and applications when it is safe to do so. Failure to do so may result in an accident involving serious injury or death.

Note: For the purpose of safe driving, lower the audio volume so you can hear sounds outside of the vehicle, including car horns and emergency vehicle sirens.

❒ To prevent the battery discharge, do not leave the audio system on for a long period of time when the engine is not running.

❒ If a cellular phone or CB radio is used in or near the vehicle, it could cause noise to occur from the audio system. This does not indicate that the system has been damaged.

Do not spill any liquid on the audio system.

RADIO RECEPTION

AM Characteristics

AM signals bend around such things as buildings or mountains and bounce off the ionosphere.

They can reach longer distances than FM signals.

Because of this, two stations may sometimes be picked up on the same frequency at the same time.

FM Characteristics

An FM broadcast range is usually about 25 – 30 mi (40—50 km) from the source. Because of extra coding needed to break the sound into two channels, stereo FM has even less range than monaural (non-stereo) FM.

Signals from an FM transmitter are similar to beams of light; they do not bend around corners, but they do reflect.

Unlike AM signals, FM signals cannot travel beyond the horizon. Therefore, FM stations cannot be received as far as AM reception.

Atmospheric conditions can also affect FM reception. High humidity will cause poor reception. However, cloudy days may provide better reception than clear days.

Multipath Noise

Since FM signals can be reflected by obstructions, it is possible to receive both direct signal and reflected signal at the same time. This causes a slight delay in reception and may be heard as a broken sound or a distortion. This problem may also be encountered when in close proximity to the transmitter.

Flutter/Skip Noise

Signals from an FM transmitter move in straight lines and become weak in valleys, between tall buildings, mountains, and other obstacles. When a vehicle passes through such an area, the reception conditions may change suddenly, resulting in annoying noise.

Weak Signal Noise

In suburban areas, broadcast signals become weak due to the distance from the transmitter. This reception is characterized by sound breakup.

Strong Signal Noise

This occurs very close to a transmitter tower. The broadcast signals are extremely strong, so the result is noise and sound breakup at the radio receiver.

Station Drift Noise

When a vehicle reaches the area of two strong stations broadcasting at similar frequencies, the original station may be temporarily lost, and the second station picked up. At this time, there will be some noise from this disturbance.

OPERATING TIPS FOR MP3

MP3 stands for MPEG Audio Layer 3, which is standardized voice compression established by the ISO (*) working group (MPEG).

Use of MP3 allows for audio data to be compressed to approximately a tenth of the source data size.

This unit plays files with the extension (.mp3) as MP3 files.

(*) International Organization for Standardization

Note:

❒ Do not use an audio file extension on files other than audio files. In addition, do not change the audio file extension. Otherwise, the unit will not recognize the file correctly, resulting in noise or a malfunction.

❒ Supply of this product only conveys a license for private, non-commercial use and does not convey a license nor imply any right to use this product in any commercial (i.e. revenue-generating) real time broadcasting (terrestrial, satellite, lead and/or any other media), broadcasting/streaming via the Internet, intranets and/or other networks or in other electronic content distribution systems, such as pay-audio or audio-on-demand applications. An independent license for such use is required. For details, please visit http://www. mp3licensing.com.

❒ When naming an MP3 file, be sure to add an MP3 file extension (.mp3) after the file name.

❒ The number of characters which can be displayed is restricted.

OPERATING TIPS FOR WMA

WMA is short for Windows Media Audio and is the audio compression format used by Microsoft.

Audio data can be created and stored at a higher compression ratio than MP3. This unit plays files with the extension (.wma) as WMA files.

Microsoft and Windows Media are registered trademarks of Microsoft Corporation U.S. in the United States and other countries.

Note: Do not use an audio file extension on files other than audio files. In addition, do not change the audio file extension. Otherwise, the unit will not recognize the file correctly resulting in noise or a malfunction.

❒ WMA files written under specifications other than the indicated specification may not play normally or files or folder names may not display correctly.

❒ The file extension may not be provided depending on the system, version, software, or settings. In this case, add the file extension ".wma" to the end of the file name, and then write it to the disc.

OPERATING TIPS FOR AAC

AAC stands for Advanced Audio Coding, which is standardized voice compression established by the ISO (*) working group (MPEG).

Audio data can be created and stored at a higher compression ratio than MP3.

This unit plays files with the extensions .aac/.m4a/.wav (**) as the AAC files.

(*) International Organization for Standardization

Note: Do not use an audio file extension on files other than audio files. In addition, do not change the audio file extension. Otherwise, the unit will not recognize the file correctly resulting in noise or a malfunction.

❒ AAC files written under specifications other than the indicated specification may not play normally or files or folder names may not display correctly.

❒ The file extension may not be provided depending on the computer operating system, version, software, or settings. In this case, add the file extension ".aac ", ".m4a", or ".wav" to the end of the file name, and then write it to the memory.

OPERATING TIPS FOR OGG

OGG is the audio compression format for Xiph. Org Foundation.

Audio data can be created and stored at a higher compression ratio than MP3.

This unit plays files with the extension (.ogg) as OGG files.

Note: Do not use an audio file extension on files other than audio files. In addition, do not change the audio file extension. Otherwise, the unit will not recognize the file correctly, resulting in noise or a malfunction.

❒ OGG files written under specifications other than the indicated specification may not play normally or files or folder names may not display correctly.

❒ The file extension may not be provided depending on the computer operating system, version, software, or settings. In this case, add the file extension ".ogg" to the end of the file name, and then write it to the disc.

OPERATING TIPS FOR USB DEVICE — IF EQUIPPED

This unit plays audio files as follows:

Extension	Playback With This Unit
.mp3	MP3
.wma	WMA
.aac, .m4a, .wav	AAC
.ogg	OGG

Note: Do not use an audio file extension on files other than audio files. In addition, do not change the audio file extension. Otherwise, the unit will not recognize the file correctly, resulting in noise or a malfunction.

❒ Playback may not be possible depending on the type and condition of the USB flash memory even if the audio file complies with the standard above.

❒ A copyright protected WMA/AAC file cannot be played in this unit.

❒ The order of the music data stored in the device may differ from the playback order.

❒ To prevent loss or damage of stored data, we recommend that you always back up your data.

❒ If a device exceeds the maximum electric current value of 1,000 mA, it may not operate or recharge when connected.

❒ Do not pull out the USB device while in the USB mode (only pull it out while in FM/AM radio mode).

❒ The device will not operate if the data is password protected.

MP3/WMA/AAC files written under specifications other than the indicated specification may not play normally, or files/folder names may not display correctly.

OPERATING TIPS FOR IPOD

This unit supports playback of music files recorded to an iPod.

❒ iPod is a trademark of Apple Inc., registered in the U.S. and other countries.

The iPod may not be compatible depending on the model or OS version. In this case, an error message is displayed.

Note:

❒ Remove the iPod when it is not in use. Because the iPod is not designed to withstand excessive changes in cabin temperature, it could be damaged or the battery may deteriorate due to the excessive temperature or humidity if left in the vehicle.

❒ For details on using the iPod, refer to the iPod instruction manual.

❒ When connecting the iPod to a USB port, all commands are made from the audio unit. iPod control is not possible. The audio unit cannot display images or videos stored in an iPod.



Caution!

❒ If data in the iPod are lost while it is connected to the unit, FCA cannot guarantee recovery of any lost data.

❒ If the iPod battery is deteriorated, the iPod may not recharge and playback may not be possible when it is connected to the unit.

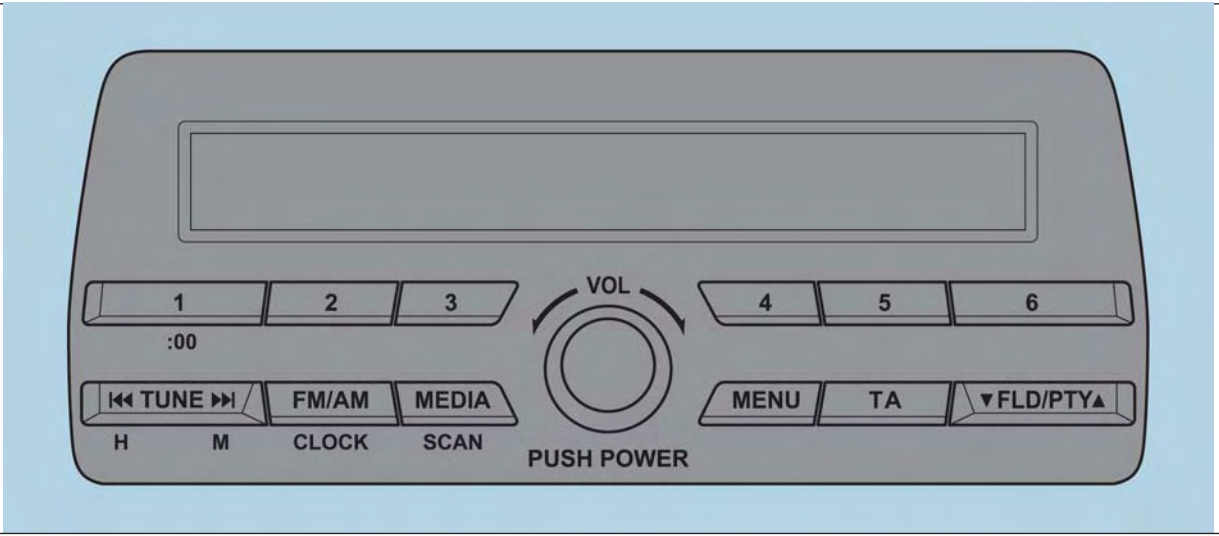

GUID-06020300121001

POWER/VOLUME SOUND CONTROLS

Power ON/OFF

1. Switch the ignition to ACC or ON.
2. Push the power/volume dial to turn the audio system on.
3. Push the power/volume dial again to turn the audio system off.

Volume Adjustment

To adjust the volume, turn the power/volume dial.

Turn the power/volume dial clockwise to increase volume or counterclockwise to decrease it.

Audio Sound Adjustment

Proceed as follows:

1. Push the menu button to select the function. The selected function will be indicated.
2. Turn the audio control dial to adjust the selected functions as follows:

Indication	Setting Value	
	Turn Counterclockwise	Turn Clockwise
ALC (Automatic Volume Adjustment)	Level Decrease	Level Increase
BASS (Low Pitch Sound)	Decrease Bass	Increase Bass
TREB (Treble Sound)	Decrease Treble	Increase Treble
FADE (Front/Back Volume Balance)	Shift The Sound To The Front	Shift The Sound To The Rear
BAL (Left/Right Volume Balance)	Shift The Sound To The Left	Shift The Sound To The Right
BEEP (Audio Operation Sound)	Off	On
BT Setup (*)	Select Mode	
12Hr < > 24Hr (12 Hr/24 Hr Time Adjustment)	12hr (Flashing)	24hr (Flashing)

(*) Depending on the model, this function may not be available.

Note: If not operated for several seconds, the display returns to the previous display. To reset bass, treble, fade, and balance, push the menu button for two seconds. The unit will beep and “CLEAR” will be displayed.

ALC (Automatic Volume Adjustment)

The automatic level control (ALC) changes the audio volume automatically according to the vehicle speed.

The faster the vehicle speed, the higher the volume increases. ALC has ALC OFF and ALC LEVEL one to seven modes. At ALC LEVEL seven, the amount that the volume can increase is at the maximum. Select the mode according to the driving conditions.

BEEP (Audio Operation Sound)

The setting for the operation sound when pushing and holding a button can be changed. The initial setting is ON. Set to OFF to mute the operation sound.

BT SETUP Mode

Music and other audio such as voice data recorded on portable audio devices and mobile phones available on the market which are equipped with the Bluetooth transmission function can be listened to via wireless transmission over the vehicle's speakers. Using the BT SETUP mode, these devices can be programmed to the Bluetooth unit or changed.

12Hr < > 24Hr (12 Hr/24 Hr Time Adjustment)

Rotating the audio control dial switches the display between 12 and 24-hour clock time.

CLOCK

Setting The Time

The clock can be set at any time when the ignition is switched to ACC or ON.

❒ To adjust the time, push the clock button “FM/AM” for about two seconds until a beep is heard.

❒ The clock's current time will flash.

Time Adjustment

Proceed as follows:

1. To adjust the time, push the hour/minute buttons ⏮ / ⏭ buttons while the clock's current time is flashing.
2. The hours advance while the hour set ⏮ is pushed. The minutes advance while the minute set button ⏭ is pushed.
3. Push the clock button FM/AM again to start the clock.

Time Resetting

Proceed as follows:

1. Push the clock button “FM/AM” for about two seconds until a beep is heard.

2. Push the :00 button (one).

3. When the button is pushed, the time will be reset as follows:

Example

12:01—12:29→12:00

12:30—12:59→1:00

Note:

❒ When the :00 button (one) is pushed, the seconds will start at “00”.

❒ Switching between 12 and 24-hour clock time. Push the menu button several times until 12 and 24-hour clock time are displayed. Turn the audio control dial in either direction, and select the desired clock setting while the preferred clock time is flashing.

OPERATING THE RADIO

Radio ON

To turn the radio on, push the band selector button “FM/AM”.

Band Selection

Successively pushing the band selector button “FM/AM” switches the bands as follows: FM1→FM2→AM.

The selected mode will be indicated.

Note: If the FM broadcast signal becomes weak, reception automatically changes from STEREO to MONO for reduced noise.

Tuning

The radio has the following tuning methods: Manual, Seek, Scan, Preset Channel, and Auto Memory Tuning. Preset Channels are the easiest to tune to.

Manual Tuning

Select the station by pushing the tuning button ⏮ / ⏭ lightly.

Seek Tuning

Automatic search for radio stations starts when the tuning button ⏮ / ⏭ is pushed and a beep sound is heard. The search stops when a station is found.

Note: If you continue to push and hold the button, the frequency will continue changing without stopping.

Scan Tuning

Push and hold the scan button “MEDIA” to sample stations automatically.

Scanning stops at each station for about five seconds. To accept a station, push and hold the scan button “MEDIA” again during this interval.

Preset Channel Tuning

The six preset channels can be used to store six AM and twelve FM stations.

Proceed as follows:

1. To set a channel, first select AM, FM1, or FM2. Tune to the desired station.

2. Push a channel preset button for about two seconds until a beep is heard. The preset channel number or station frequency will be displayed. The station is now held in the system memory.

3. Repeat this operation for the other stations and bands you want to store.

Note: To tune one in the memory, select AM, FM1, or FM2 and then push its channel preset button. The station frequency or the channel number will be displayed.

Auto Memory Tuning

This is especially useful when driving in an area where the local stations are not known.

Push and hold the auto memory button (AUTO-M) for about two seconds until a beep is heard. The system will automatically scan and temporarily store up to six stations with the strongest frequencies in each selected band in that area.

After scanning is completed, the station with the strongest frequency will be tuned and its frequency displayed.

Push and release the auto memory button (AUTO-M) to recall stations from the auto-stored stations. One stored station will be selected each time, and its frequency and channel number will be displayed.

Note: If no stations can be tuned after scanning operations, “A” will be displayed.

HOW TO USE AUXILIARY JACK/USB PORT — IF EQUIPPED

An audio device can be played through the vehicle’s speakers by utilizing the auxiliary jack.

Use a commercially-available, (Ø 3.5) stereo mini plug lead to connect the audio device to the auxiliary jack. Contact an authorized dealer for details.

In addition, audio can be played from the vehicle’s speakers by connecting a USB device or an iPod to the USB port.

Error Indications

If you cannot clear the error indication, contact an authorized dealer.

AUDIO CONTROL SWITCH OPERATION



GUID-0620500121001

Adjust The Volume

To increase the volume, push the UP volume switch (+).

To decrease the volume, push the DOWN volume switch (–).

Seek Switch

MW/LW/FM radio

Push the seek switch ⏮ / ⏭. The radio switches to the next/previous stored station in the order that it was stored.

Push and hold the seek switch ⏮ / ⏭ to seek all usable stations at a higher or lower frequency whether programmed or not.

Radio stations, which have been previously stored in the radio presets, can be called up by pressing the seek switch ⏮ / ⏭ while any radio station stored in the radio presets is being received.

Radio stations can be called up in the order they were stored with each push of the switch ⏮ / ⏭.

USB Audio/Bluetooth Audio — If Equipped

Push the seek switch ⏭ to skip to the beginning of the next track.

Push the seek switch ⏮ within a few seconds after playback begins to return the previous track.

Push the seek switch ⏮ after a few seconds of playback to start from the beginning of the current track.

Mute Switch

Push the mute switch once to mute the audio. Push it again to resume audio output.

Note: If the ignition is switched off with the audio muted, the mute will be cancelled. When the engine is restarted, the audio is not muted. To mute the audio again, push the mute switch.

AUX/USB/IPOD MODE

Warning!

Do not adjust the portable audio unit or a similar product while driving the vehicle: Adjusting the portable audio unit or a similar product while driving the vehicle is dangerous as it could distract your attention from the vehicle operation which could lead to a serious accident. Always adjust the portable audio unit or a similar product while the vehicle is stopped.

Caution!

Always close the auxiliary jack/USB port lid when it is not in use. If foreign matter or liquid penetrates the auxiliary jack/USB port, it may cause a malfunction.

Audio can be heard from the vehicle's speakers by connecting a commercially-available portable audio unit to the auxiliary jack.

A commercially-available, non-impedance (3.5 Ø) stereo mini plug lead is required. Contact an authorized dealer for details.

In addition, audio can be played from the vehicle audio device by connecting a USB device or an iPod to the USB port.

Note:

❒ Depending on the portable audio device, noise may occur when the device is connected to the vehicle accessory socket (if noise occurs, do not use the accessory socket).

❒ This mode may not be usable depending on the portable audio device to be connected.

❒ Before using the auxiliary jack/USB port, refer to the instruction manual for the portable audio device.

❒ Use a commercially-available, non-impedance (3.5Ø) stereo mini plug for connecting the portable audio unit to the auxiliary jack. Before using the auxiliary jack, read the manufacturer's instructions for connecting a portable audio unit to the auxiliary jack.

❒ To prevent battery discharge, do not use the auxiliary input for long periods with the engine off or idling.

❒ When connecting a device to the auxiliary jack or USB port, noise may occur depending on the connected device. If the device is connected to the vehicle's accessory socket, the noise can be reduced by unplugging it from the accessory socket.

How To Connect USB Port/Auxiliary Jack

Warning!

Do not allow the connection plug cord to get tangled with the parking brake or the shift lever (manual transmission/gear selector (automatic transmission). Allowing the plug cord to become tangled with the parking brake or the gear selector manual transmission/gear selector (automatic transmission) is dangerous as it could interfere with driving, resulting in an accident.

Connecting A Device

Proceed as follows:

1. If there is a cover on the AUX jack or USB port, remove the cover.
2. Connect the connector on the device to the USB port.

Connecting With A Connector Lead

Proceed as follows:

1. If there is a cover on the AUX jack or USB port, remove the cover.
2. Connect the device plug/connector lead to the auxiliary jack.

Note:

❒ Do not place objects or apply force to the auxiliary jack/USB port with the plug connected.

❒ Insert the plug into the auxiliary jack/USB port securely.

❒ Insert or pull out the plug with the plug perpendicular to the auxiliary jack/USB port hole.

❒ Insert or remove the plug by holding its base.

How To Use AUX Mode

Proceed as follows:

1. Switch the ignition to ACC or ON.
2. Push the power/volume dial to turn the audio system on.
3. Push the MEDIA button of the audio unit to change to the AUX mode.

Note:

❒ When the device is not connected to the auxiliary jack, the mode does not switch to the AUX mode.

❒ Adjust the audio volume using the portable audio device or audio unit.

❒ Audio adjustments other than audio volume can only be done using the portable audio device.

❒ If the connection plug is pulled out from the auxiliary jack while in AUX mode, noise may occur.

How To Use USB Mode — If Equipped

Type	Playable Data
USB Mode	MP3/WMA/AAC file

This unit does not support a USB 3.0 device. In addition, other devices may not be supported depending on the model or OS version.

Playback

Proceed as follows:

1. Place the ignition in ACC or ON.
2. Push the power/volume dial to turn the audio system on.
3. Push the MEDIA button to switch to the USB mode and start playback.

Note:

❒ Some devices, such as smart phones, may require a setting change to allow a USB connection.

❒ When the USB device is not connected, the mode will not switch to USB mode.

❒ When there is no playable data in the USB device, “NO CONTENTS” is flashed.

❒ Playback of the USB device is in the order of the folder numbers. Folders which have no MP3/WMA/AAC files are skipped.

❒ Do not remove the USB device while in the USB mode. The data may be damaged.

Pause

To stop playback, push the play/pause button (four). Push the button again to resume playback.

Fast-Forward/Reverse

Push and hold the fast-forward button ⏭ to advance through a track at high speed.

Push and hold the reverse button ⏮ to reverse through a track at high speed.

Track Search

1. Push the track down button ⏮ within a few seconds after playback begins to return to the previous track.
2. Push the track up button ⏭ once to skip to the beginning of the next track.
3. Push the track down button ⏮ after a few seconds of playback to start from the beginning of the current track.

Folder Search

To change to the previous folder, push the folder down button ▼, or push the folder up button ▲ to advance to the next folder.

Music Scan

This function scans the titles in a folder currently being played and plays 10 seconds of each song to aid you in finding a song you want to listen to.

Push and hold the scan button (MEDIA) during playback to start the scan play operation (the track number will flash).

Push and hold the scan button (MEDIA) again to cancel scan playback.

Note: If the unit is left in scan, normal playback will resume where scan was selected.

Repeat Playback

Track Repeat

Proceed as follows:

1. Push the repeat button (one) during playback to play the current track repeatedly. “TRACK RPT” is displayed (is displayed next to RPT at the bottom of the display area).
2. To cancel the repeat playback, push the button again after three seconds.

Folder Repeat

Proceed as follows:

1. Push the repeat button (one) during playback, and then push the button again within three seconds to play the tracks in the current folder repeatedly. “FOLDER RPT” is displayed (is displayed next to RPT at the bottom of the display area).

Random Playback

Tracks are randomly selected and played.

Folder Random

Proceed as follows:

1. Push the random button (two) during playback to play the tracks in the folder randomly. “FOLDER RDM” is displayed (is displayed next to RDM at the bottom of the display area).
2. To cancel the random playback, push the button again after three seconds.

All Random

Proceed as follows:

1. Push the random button (two) during playback, and then press the button again within three seconds to play the tracks in the USB device randomly. “ALL RDM” is displayed (is displayed next to RDM at the bottom of the display area).
2. Push the button again to cancel the random playback.

Switching The Display

The information displayed on the audio display changes as follows each time the text button (three) is pressed during playback

Button	Information Displayed On Audio Display
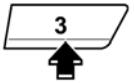	File number/ Elapsed time
	Folder number/ File number
	File name
	Folder name
	Album name
	Song name
	Artist name

Note:

❒ The information (artist name, music name) is displayed only when the USB device information in the USB device has information which can be displayed on the screen.

❒ This unit cannot display some characters. Characters which cannot be displayed are indicated by an asterisk (*).

Display Scroll

Only 13 characters can be displayed at one time. To display the rest of the characters of a long title, push and hold the text button (three).

The display scrolls the next 13 characters. Push and hold the text button (three) again after the last 13 characters have been displayed to return to the beginning of the title.

Note: The number of characters which can be displayed is restricted.

Error Messages

When the message “CHECK USB” is displayed, it indicates that there is some error in the USB device.

Verify that the content recorded in the USB device has MP3/WMA/AAC files and reconnect correctly. If the message reappears, contact an authorized dealer.

How to Use iPod Mode

An iPod may not be compatible depending on the model or OS version. In this case, an error message is displayed.

Note: The iPod functions on the iPod cannot be operated while it is connected to the unit because the unit controls the iPod functions.

Playback

Proceed as follows:

1. Switch the ignition to ACC or ON.
2. Push the power/volume dial to turn the audio system on.
3. Push the MEDIA button to switch to the iPod mode and start playback.

Note:

❒ When an iPod is not connected, the mode does not switch to the iPod mode.

❒ When there is no playable data in the iPod, “NO CONTENTS” is flashed.

Caution!

Do not remove the iPod while in the iPod mode. Otherwise, the data could be damaged.

Pause

1. To stop playback, push the play/pause button (four).
2. Push the button again to resume playback.

Fast-Forward/Reverse

1. Push and hold the fast-forward button ⏭ to advance through a track at high speed.
2. Push and hold the reverse button ⏮ to reverse through a track at high speed.

Track Search

1. Push the track up button ⏭ once to skip forward to the beginning of the next track.

2. Push the track down button ⏮ within a few seconds (depends on iPod software version) after playback begins to track down to the beginning of the previous track.

3. Push the track down button ⏮ after a few seconds (depends on iPod software version) have elapsed to start playback from the beginning of the current track.

Category Search

1. Push the category down button (five) to select the previous category and press the category up button (six) to select the next category.

Note: The types of categories include Playlist, Artist, Album, Song, Podcast, Genre, Composer, and Audio book.

List Search

1. Push the list down button ▼ to select the previous list and push the list up button ▲ to select the next list.

Note: When the selected category is Song or Audio book, there is no list.

Music Scan

This function scans the titles in a list currently being played and plays 10 seconds of each song to aid you in finding a song you want to listen to.

1. Push and hold the scan button MEDIA during playback to start the scan play operation (the track number will flash).

2. Push and hold the scan button MEDIA again to cancel scan playback.

Note: If the unit is left in scan, normal playback will resume where scan was selected.

Repeat Playback

Proceed as follows:

1. Push the repeat button (One) during playback to play the current track repeatedly. “TRACK RPT” is displayed (is displayed next to RPT at the bottom of the display area).

2. Push the button again to cancel the repeat playback.

Random Playback

Tracks are randomly selected and played.

Song Random

1. Push the random button (two) during playback to play the tracks in the list randomly. “SONG RDM” is displayed (is displayed next to RDM at the bottom of the display area).

2. To cancel the random playback, push the button again after 3 seconds.

Album Random

Proceed as follows:

1. Push the random button (two) during playback, and then push the button again within three seconds to play the tracks in the iPod randomly. “ALBUM RDM” is displayed (is displayed next to RDM at the bottom of the display area).

Note: The track number being played randomly is in the order of the iPod shuffle table.

Switching The Display

The information displayed on the audio display changes as follows each time the text button (three) is pushed during playback.

Button	Information Displayed On Audio Display
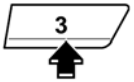	File number/ Elapsed time
	File number
	Category name
	Artist name
	Album name
	Song name

Note:

❒ The information (artist name, music name) is displayed only when the iPod has information which can be displayed.

❒ This unit cannot display some characters. Characters which cannot be displayed are indicated by an asterisk (*).

Display Scroll

13 characters can be displayed at one time. To display the rest of the characters of a long title, push and hold the text button (three). The display scrolls the next 13 characters.

Push and hold the text button (three) again after the last 13 characters have been displayed to return to the beginning of the title.

Note: The number of characters which can be displayed is restricted.

Error Messages

If the message “CHECK iPod” is displayed, it indicates that there is a malfunction in the iPod. Verify that the content recorded in the iPod has playable files and connect correctly. If the message reappears, contact an authorized dealer.

Error Indications

If you see an error indication on the display, find the cause in the chart.

If you cannot clear the error indication, contact an authorized dealer.

Indication	Cause	Solution
CHECK USB	USB device malfunction	Verify that the content recorded in the USB device has MP3/WMA/AAC files and reconnect correctly. If the error indication continues to display, contact an authorized dealer.
CHECK iPod	iPod malfunction	Verify that the content recorded in the iPod has playable files and reconnect correctly. If the error indication continues to display, contact an authorized dealer.

BLUETOOTH

Bluetooth Hands-Free Outline

When a Bluetooth device (mobile phone) is connected to the vehicle's Bluetooth unit via radio wave transmission, a call can be made or received by pressing the talk button, pickup button, or hang-up button on the audio remote control switch, or by operating the center display.

For example, even if a device (mobile phone) is in your coat pocket, a call can be made without taking the device (mobile phone) out and operating it directly.

Warning!

ALWAYS drive safely with your hands on the wheel. You have full responsibility and assume all risks related to the use of the features and applications in this vehicle. Only use these features and applications when it is safe to do so. Failure to do so may result in an accident involving serious injury or death.

Bluetooth Audio Outline

When a portable audio unit equipped with the Bluetooth communication function is paired to the vehicle, you can listen to music stored on the paired portable audio device from the vehicle's speakers.

It is not necessary to connect the portable audio device to the vehicle's external input terminal.

After programming, operate the vehicle audio control panel to play/stop the audio.

Note:

❒ The communication range of a Bluetooth equipped device is about 32 ft (10 m) or less.

❒ Basic audio operation is available using voice commands even if Bluetooth is not connected.

❒ Some Bluetooth mobile devices are not compatible with the vehicle. Contact an authorized dealer for information regarding Bluetooth mobile device compatibility:

Warning!

For your safety, a device can be paired only when the vehicle is parked. If the vehicle starts to move, the pairing procedure will end. Park the vehicle in a safe place before pairing.

Component Parts

Microphone (Hands-Free)

The microphone is used for speaking voice commands or when making a Hands-free call.



GUID-06010904135005

Talk Button/Pick-Up Button And Hang-Up Button (Hands Free)

The basic functions of Bluetooth Hands-Free can be used for such things as making calls or hanging up using the talk pickup and hang-up buttons on the steering wheel.

Volume Adjustment

The power/volume dial of the audio unit is used to adjust the volume.

Turn the dial to the right to increase volume, to the left to decrease it.

The volume can also be adjusted using the volume switch on the steering wheel.

Note: If the volume is lower compared to other audio modes, increase the volume from the device side.

Bluetooth Preparation

Bluetooth Hands-Free Preparation

Pairing Code Setting

The 4-digit pairing code setting for registration of your cell phone (pairing) can be set beforehand.

Note: The initial setting value is “0000”.

Proceed as follows:

1. Press the pick-up button or talk button with a short press.
2. Say: [Beep] “Setup”.
3. Prompt: “Select one of the following: Pairing options, confirmation prompts, language, pass code, select phone or select music player”.
4. Say: [Beep] “Pairing options”.
5. Prompt: “Select one of the following: Pair, Edit, Delete, List, or Set Pairing Code”.
6. Say: [Beep] “Set pairing code”.
7. Prompt: “Your current pairing code is XXXX. Do you want to change it to a different pairing code”?
8. Say: [Beep] “Yes”.
9. Prompt: “Please say a 4-digit pairing code”.
10. Say: [Beep] “YYYY”.
11. Prompt: “YYYY is this correct”?

12. Say: [Beep] “Yes” or “No”.

13. If “Yes”, go to Step 14. If “No”, the procedure returns to Step 9.

14. Prompt: “Your new pairing code is YYYY. Use this pairing code when pairing devices to the Hands free system. Do you want to pair a device now”?

15. Say: [Beep] “Yes” or “No”.

16. If “Yes”, the system switches to the device registration mode. If “No”, the system returns to standby status.

Device Pairing

To use Bluetooth Hands-Free, the device equipped with Bluetooth has to be paired to the Bluetooth unit using the following procedure.

A maximum of seven devices including hands-free mobile phones and Bluetooth audio devices can be paired to one vehicle.

Note: If a Bluetooth device has already been paired to the vehicle as a Bluetooth audio device, it does not need to be paired again when using the device as a hands-free mobile phone. Conversely, it does not need to be paired again as a Bluetooth audio device if it has already been paired as a hands-free mobile phone.

1. Activate the Bluetooth application of the device.

Note: For the operation of the device, refer to its instruction manual.

2. Press the pick-up button or talk button with a short press.

3. Say: [Beep] “Setup”.

4. Prompt: “Select one of the following: Pairing options, confirmation prompts, language, pass code, select phone or select music player”.

5. Say: [Beep] “Pairing options”.

6. Prompt: “Select one of the following: Pair, Edit, Delete, List, or Set Pairing Code”.

7. Say: [Beep] “Pair”.

8. Prompt: “Start the pairing process on your Bluetooth device. Your pairing code is 0000 (XXXX). Input this on your Bluetooth device when prompted on the device. See device manual for instructions”.

9. Using the device, perform a search for the Bluetooth device (Peripheral device).

Note: For the operation of the device, refer to its instruction manual.

10. Select “124 Spider” from the device list searched by the device.

11. Input the 4-digit pairing code to the device.

12. Prompt: “Please say the name of the device after the beep”.

13. Say: [Beep] “XXXX - - -” (Say a “device tag”, an arbitrary name for the device.) Example: “Stan's device.”

Note: Say a paired “device tag” within 10 seconds. If more than two devices are to be paired, they cannot be paired with the same or similar “device tag”.

14. Prompt: “XXXXXX - - - (Ex. “Stan's device”) (Device tag). Is this correct”?

15. Say: [Beep] “Yes”.

16. Prompt: “Pairing complete”.

After a device is registered, the system automatically identifies the device. By activating Bluetooth Hands-Free again, or by activating Bluetooth Hands-Free first after switching the ignition from OFF to ACC, the system reads out a voice guidance, “XXXXXX - - - (Ex. “Stan's device”) (Device tag) is connected”.

Note:

❒ When the pairing is completed, the symbol is displayed.

❒ Some Bluetooth audio devices need a certain amount of time before the symbol is displayed.

❒ Device registration can also be done by operating the audio unit.

❒ Depending on the device, the registration status may be lost after a certain period of time. If this occurs, repeat the entire process from Step 1.

Registered Device Read-Out

Bluetooth Hands-Free can read out the devices registered to its system.

Proceed as follows:

Caution!

Do this function only when parked. It is too distracting to attempt while driving and you may make too many errors to be effective.

1. Press the pick-up button or talk button with a short press.
2. Say: [Beep] “Setup”.
3. Prompt: “Select one of the following: Pairing options, confirmation prompts, language, pass code, select phone or select music player”.
4. Say: [Beep] “Pairing options”.
5. Prompt: “Select one of the following: Pair, Edit, Delete, List, or Set Pairing Code”.
6. Say: [Beep] “List”.
7. Prompt: “XXXXX..., XXXXX..., XXXXX... (Ex. Device A, device B, device C)” (The voice guidance reads out the device tags registered to the hands-free system).

Press the talk button with a short press during the read-out at the desired device, and then say one of the following voice commands to execute it.

1. “Select phone”: Selects device (Mobile phone) when the talk button is short-pressed.
2. “Select music player”: Selects device (Music player) when the talk button is short-pressed.
3. “Edit”: Edits device when the talk button is short-pressed.
4. “Continue”: Continues the list readout.
5. “Delete”: Deletes the registered device when the talk button is short pressed.
6. “Previous”: Returns to the previous device in read-out when the talk button is short pressed.
7. Prompt: “End of list, would you like to start from the beginning?”
8. Say: [Beep] “No”
9. Prompt: “Returning to main menu.”

Device Selection

If several devices have been paired, the Bluetooth unit links the device last paired. If you would like to link a different paired device, it is necessary to change the link.

The order of device priority after the link has been changed is maintained even when the ignition is switched off.

Hands-Free Phone

Proceed as follows:

1. Press the pick-up button or talk button with a short press.
2. Say: [Beep] “Setup”.
3. Prompt: “Select one of the following: Pairing options, confirmation prompts, language, pass code, select phone or select music player.”
4. Say: [Beep] “Select phone”
5. Prompt: “Please say the name of the device you would like to select. Available devices are XXXXX... (Ex. device A), XXXXX... (Ex. device B), XXXXX... (Ex. device C). Which device please?”
6. Say: [Beep] “XXXXX... (Ex. Device B)”.
7. Prompt: “XXXXX... (Ex. Device B). Is this correct?”
8. Say: [Beep] “Yes” or “No”.

9. If “Yes”, go to Step 10. If “No”, the procedure returns to Step 5.

10. Prompt: “XXXXX... (Ex. Device B) selected.”

Music Player

Proceed as follows:

1. Press the pick-up button or talk button with a short press.

2. Say: [Beep] “Setup”.

3. Prompt: “Select one of the following: Pairing options, confirmation prompts, language, pass code, select phone or select music player.”

4. Say: [Beep] “Select music player”.

5. Prompt: “Please say the name of the device you would like to select. Available devices are XXXXX... (Ex. device A), XXXXX... (Ex. device B), XXXXX... (Ex. device C). Which device please?”

6. Say: [Beep] “XXXXX... (Ex. Device B)”.

7. Prompt: “XXXXX... (Ex. Device B). Is this correct?”

8. Say: [Beep] “Yes” or “No”.

9. If “Yes”, go to Step 10. If “No”, the procedure returns to Step 5.

10. Prompt: “XXXXX... (Ex. Device B) selected.”

Note:

❒ Some Bluetooth audio devices need a certain amount of time before the or symbol is displayed.

❒ Device (Music player) selection can also be done by operating the panel button.

Deleting A Device

Registered devices (Mobile phone) can be deleted individually or collectively.

Caution!

Do this function only when parked. It is too distracting to attempt while driving and you may make too many errors to be effective.

Proceed as follows:

1. Press the pickup button or talk button with a short press.

2. Say: [Beep] “Setup”.

3. Prompt: “Select one of the following: Pairing options, confirmation prompts, language, pass code, select phone or select music player.”

4. Say: [Beep] “Pairing options”.

5. Prompt: “Select one of the following: Pair, Edit, Delete, List, or Set Pairing Code.”

Note: A registered device (Mobile phone) can be deleted using the registration list.

6. Say: [Beep] “Delete”.

7. Prompt: “Please say the name of the device you would like to delete. Available devices are XXXXX... (Ex. device A), XXXXX... (Ex. device B), XXXXX... (Ex. device C), or all. Which device please?”

8. Say: [Beep] “X” (Say the number of the device to be deleted).

Note: Say “All” to delete all devices (Mobile phone).

9. Prompt: “Deleting XXXXX... (Ex. device B...) (Registered device tag). Is this correct?”

10. Say: [Beep] “Yes”.

11. Prompt: “Deleted”.

Registered Device Editing

Proceed as follows:

1. Press the pickup button or talk button with a short press.

2. Say: [Beep] “Setup”.

3. Prompt: “Select one of the following: Pairing options, confirmation prompts, language, passcode, select phone or select music player.”

4. Say: [Beep] “Pairing options”.

5. Prompt: “Select one of the following: Pair, Edit, Delete, List, or Set Pairing Code.”

6. Say: [Beep] “Edit”.

7. Prompt: “Please say the name of the device you would like to edit. Available devices are XXXXX... (Ex. device A), XXXXX... (Ex. device B), XXXXX... (Ex. device C). Which device please?”

8. Say: [Beep] “X” (Say the number of the device to be edited.)

9. Prompt: “New name please?”

10. Say: [Beep] “XXXXX... (Ex. Device C)” (Speak a “device tag” an arbitrary name for the device).

11. Prompt: “XXXXX... (Ex. device C) (Device tag), is this correct?”

12. Say: [Beep] “Yes”.

13. Prompt: “New name saved.”

Bluetooth Audio Device Setup

❒ The mode changes as follows each time the menu button (MENU) is pressed. Select “ BT SETUP”.

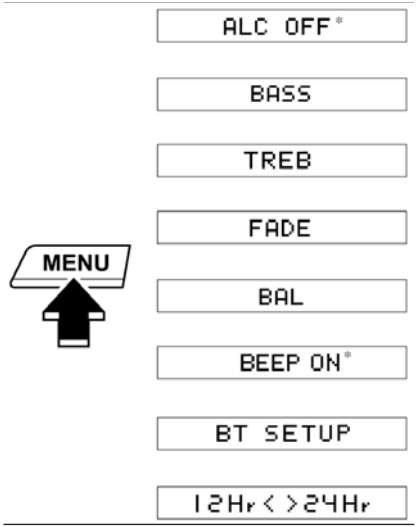

GUID-PAG43A

* Depending on the mode selected, the indication changes.

❒ Turn the audio control dial and select a desired mode.

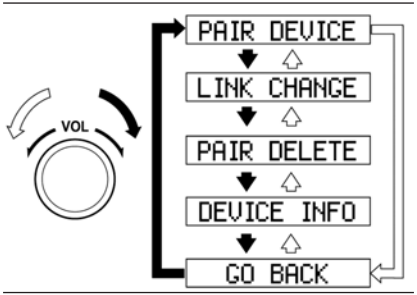

GUID-PAG43B

Phrase	Mode	Function
PAIR DEVICE	Pairing Mode	Bluetooth Audio Device Pairing
LINK CHANGE	Link Change Mode	Changing Link To Bluetooth Audio Device
PAIR DELETE	Pairing Deletion Mode	Deleting Link To Bluetooth Audio Device

Phrase	Mode	Function
DEVICE INFO	Device Information Display Mode	Displaying Vehicle's Bluetooth Unit Information

❒ Press the audio control dial to determine the mode.

Bluetooth Audio Device Pairing

Any Bluetooth audio device must be paired to the vehicle's Bluetooth unit before it can be listened to over the vehicle's speakers.

A maximum of seven devices including Bluetooth audio devices and hands free mobile phones can be paired to one vehicle.

Note:

❒ If a Bluetooth device has already been paired to the vehicle as a hands-free mobile phone, it does not need to be paired again when using the device as a Bluetooth audio device. Conversely, it does not need to be paired again as a hands-free mobile phone if it has already been paired as a Bluetooth audio device.

❒ Device registration can also be done using voice recognition.

Concerning the operation of a Bluetooth audio device itself, refer to its instruction manual.

Some Bluetooth audio devices have PIN codes (four digits). Refer to the audio device's instruction manual because the pairing procedure differs depending on whether it has a PIN code or not.

Pairing A Bluetooth Audio Device Which Has A Four-Digit PIN Code

Proceed as follows:

1. Using the audio control dial, select the pairing mode " PAIR DEVICE " in the "BT SETUP" mode. (refer to "Bluetooth Audio Device Set-Up" for details).
2. Press the audio control dial to determine the mode. After "ENTER PIN " is displayed on the audio display for three seconds, "PIN 0000" is displayed and the PIN code can be input.
3. Input the PIN code of your Bluetooth audio device by pressing channel preset buttons 1 to 4 while "PIN 0000" is displayed. Press channel preset button one to input the first digit, two for the second, three for the third, and four for the forth. For example, if the PIN code were "4213" press channel preset button "one" four times (one, two, three, four), button "two" twice (one, two), button "three" once (one), and button "four" three times (one, two, three). If the "PIN 0000" display disappears before finishing the PIN code input, repeat the procedure from Step 1.

Note: Some devices accept only a particular pairing code (Usually, "0000" or "1234"). If pairing cannot be completed, refer to the owner's manual of your mobile device, and try those numbers if necessary.

4. Press the audio control dial while the input PIN code is displayed. "PAIRING" flashes on the audio display.
5. Operate the Bluetooth audio device and set it to the pairing mode while "PAIRING" is flashing.
6. When the pairing is completed, a music note and "PAIR SUCCESS" are displayed after about 10-30 seconds, after which "PAIR SUCCESS" continues to be displayed for three seconds, and then the unit returns to the normal display.

Note:

❒ Some Bluetooth audio devices need a certain amount of time before the music note symbol is displayed.

❒ If the pairing failed, “Err” flashes for three seconds.

❒ Pairing cannot be performed while the vehicle is moving. If you attempt to perform pairing while the vehicle is moving, “PAIR DISABLE” is displayed.

❒ If seven Bluetooth audio devices have already been paired to the vehicle, pairing cannot be performed and “MEMORY FULL” is displayed. Delete one paired device to pair another one.

Pairing A Bluetooth Audio Device Which Does Not Have A Four-Digit PIN Code

Proceed as follows:

1. Using the audio control dial, select the pairing mode “PAIR DEVICE” in the “BT SETUP” mode.
2. Press the audio control dial to determine the mode. After “ENTER PIN” is displayed on the audio display for three seconds, “PIN 0000” is displayed and the PIN code can be input.
3. Press the audio control dial while “PIN 0000” is displayed. “PAIRING” flashes on the audio display.
4. Operate the Bluetooth audio device and set it to the pairing mode while “PAIRING” is flashing.
5. As the Bluetooth audio device requires a PIN code, input “0000”.
6. When the pairing is completed, a music note and “PAIR SUCCESS” are displayed after about 10-30 seconds, after which “PAIR SUCCESS” continues to be displayed for three seconds, and then the unit returns to the normal display.

Note:

❒ If pairing cannot be completed, try “1234” instead. Refer to the owner’s manual of your mobile device for the right PIN code.

❒ Some Bluetooth audio devices need a certain amount of time before the symbol is displayed.

❒ If the pairing failed, “Err” flashes for three seconds.

❒ Pairing cannot be performed while the vehicle is moving. If you attempt to perform pairing while the vehicle is moving, “PAIR DISABLE” is displayed.

❒ If seven Bluetooth audio devices have already been paired to the vehicle, pairing cannot be performed and “MEMORY FULL” is displayed. Delete one paired device to pair another one.

Device Selection

If several devices have been paired, the Bluetooth unit links the device last paired. If you would like to link a different paired device, it is necessary to change the link.

The order of device priority after the link has been changed is maintained even when the ignition is switched off.

Proceed as follows:

1. Using the audio control dial, select the link change mode “LINK CHANGE” in the “BT SETUP” mode (refer to “Bluetooth Audio Device Setup” for details).
2. Press the audio control dial to determine the mode.
3. The name of the currently linked Bluetooth audio device is displayed. If no Bluetooth audio device is currently linked, the name of the first device among the paired devices is displayed.

4. Turn the audio control dial to select the name of the device you would like to link.

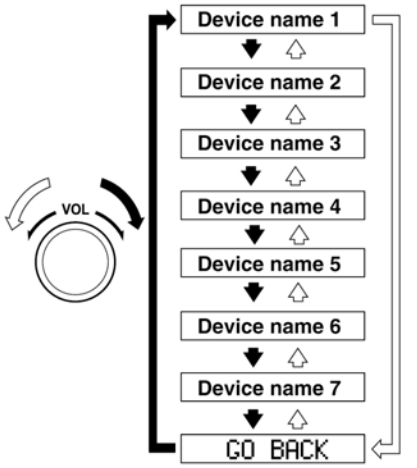

GUID-PAG47A

5. Press the audio control dial to select the device you would like to link. The symbol disappears, and “PAIRING” flashes in the audio display.

Note: When “GO BACK” is selected and the audio control dial is pressed, the display returns to “LINK CHANGE”.

6. If the link to the desired device is successful, the music note symbol is displayed again, together with “LINK CHANGED”. “LINK CHANGED” is displayed for three seconds; it then returns to the normal display.

Note:

❒ Some Bluetooth audio devices need a certain amount of time before the music note symbol is displayed.

❒ If a hands-free type mobile phone has been the most recently paired device, the Bluetooth unit links this device. If you would like to use a Bluetooth audio type device which has been previously paired to the Bluetooth unit, the link must be changed to this device.

❒ If an error occurs while trying to link a device, “Err” flashes in the audio display for three seconds, and the display returns to “LINK CHANGE”. If this occurs, check the pairing status of the Bluetooth audio device and the location of the device in the vehicle (not in the trunk or a metal-type box), and then try the link operation again.

❒ Device selection can also be done using voice recognition.

How To Confirm The Device Currently Linked

Switch to the link-change mode.

The device name displayed first is the device which is currently linked.

Deleting A Device

Proceed as follows:

1. Using the audio control dial, select the pairing delete mode “PAIR DELETE” in the “BT SETUP” mode (refer to “Bluetooth Audio Device Setup” for details.)

2. Press the audio control dial to determine the mode.

3. The name of the first device among the paired devices is displayed.

4. Rotate the audio control dial and select the name of the paired device you would like to delete.

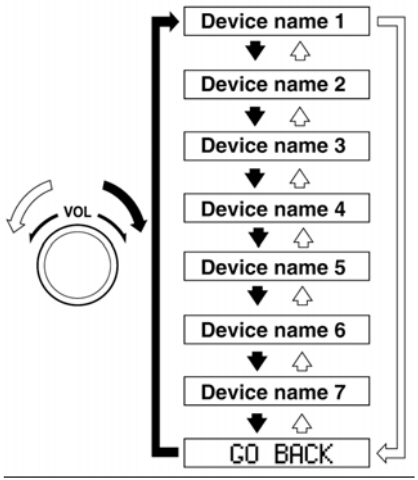

GUID-PAG46

Note: Only the names of paired devices can be displayed. If only one device is paired, only the name for this device is displayed.

❒ If a selection other than “GO BACK” is made and the audio control dial is pressed, “SURE/NO” is displayed.

❒ Rotate the audio control dial clockwise and switch the display to “SURE/YES”.

Note: The display changes as follows depending on whether the audio control dial is rotated clockwise or counter-clockwise.

Clockwise: “SURE/YES” displayed.

Counterclockwise: “SURE/NO” displayed.

1. Press the audio control dial to delete the selected device.

Note: Select “GO BACK” and press the audio control dial to return to the “PAIR DELETE” display.

2. “PAIR DELETED” is displayed for three seconds after the deletion is completed, and then it returns to the normal display.

Note: If an error occurs while trying to delete the paired device, “Err” flashes in the display for three seconds and the display returns to “LINK DELETE”.

Bluetooth Audio Device Information Display

Proceed as follows:

1. Using the audio control dial, select the pair device information display mode “DEVICE INFO” in the “BT SETUP” mode (refer to “Bluetooth Audio Device Setup” for details).

2. Press the audio control dial to determine the mode.

3. The name of the Bluetooth unit device is displayed.

4. Rotate the audio control dial to select the information for the Bluetooth unit which you would like to view.

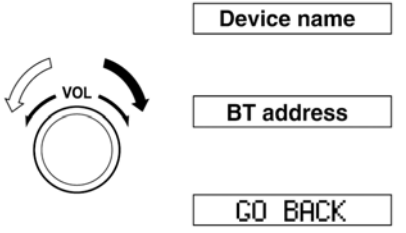

GUID-PAG47B

Note: When “GO BACK” is selected and the audio control dial is pressed, the display returns to “DEVICE INFO”.

Available Language

The available languages are English, Spanish, and Canadian French.

If the language setting is changed, all of the voice guidance and voice input commands are done in the selected language.

❒ If the language setting is changed, device registration is maintained.

❒ Phonebook records are not cleared, but each language has a separate phonebook. Therefore, entries created in one language will need to be re-entered in the phonebook of the new language.

❒ Do these steps before you start driving. These less used functions are too distracting to undertake while driving until you are fully familiar with the system.

Method 1

Proceed as follows:

1. Press the pick-up button or talk button with a short press.
2. Say: [Beep] “Setup”.
3. Prompt: “Select one of the following: Pairing options, confirmation prompts, language, passcode, select phone or select music player”.
4. Say: [Beep] “Language”.
5. Prompt: “Select a language: English, French, or Spanish”.
6. Say: [Beep] “French” (Speak the desired language: “English”, “French” or “Spanish”).

Note: Other language settings can also be made while in the current setting by saying the name of the language in the native pronunciation.

7. Prompt: “French (Desired language) selected. Is this correct”?
8. Say: [Beep] “Yes”.
9. Prompt: “French (Desired language) selected” (spoken in the newly selected language).

Method 2

Proceed as follows:

1. Press the pick-up button or talk button with a short press.
2. Say: [Beep] “French” (Say the desired language: “English”, “French” or “Spanish”) (change the desired language by saying the language name).

Note: Other language settings can also be made while in the current setting by saying the name of the language in the native pronunciation.

3. Prompt: “Would you like to change the language to French (Desired language)”?
4. Say: [Beep] “Yes”.
5. Prompt: “Please wait. Switching to French phonebook. French selected” (spoken in the newly selected language).

Voice Recognition

Warning!

ALWAYS drive safely with your hands on the wheel. You have full responsibility and assume all risks related to the use of the features and applications in this vehicle. Only use these features and applications when it is safe to do so. Failure to do so may result in an accident involving serious injury or death.

In this section, the basic operation of the voice recognition is explained.

Activate Voice Recognition

To activate the Main Menu, press the pick-up button or talk button with a short press.

Ending Voice Recognition

Use one of the following methods:

❒ Press and hold the talk-button.

❒ Press the hang-up button.

Skipping Voice Guidance For Faster Operation

Press and release the talk-button.

Note:

❒ The Bluetooth Hands-Free system is operable several seconds after the ignition is switched to ACC or ON (requires less than 15 seconds).

❒ When operating the audio unit or the A/C while using Bluetooth Hands-Free, the beep sounds or voice guidance (audio unit)/cannot be heard.

Tutorial

The tutorial explains how to use Bluetooth Hands-Free.

To activate the tutorial, do the following:

1. Press the pickup button or talk button with a short press.
2. Say: [Beep] “Tutorial”.
3. Follow the prompts to receive the appropriate voice guidance instructions.

Commands Usable During Voice Recognition

“Help” or “Go Back” are commands which can be used at anytime during voice recognition.

Help Function Use

The help function informs the user of all the available voice commands under the current conditions.

❒ Say: [Beep] “Help”.

❒ Follow the prompts to receive the appropriate voice guidance instructions.

Returning To Previous Operation

This command is for returning to the previous operation while in the voice recognition mode.

Say: [Beep] “Go Back”

To prevent a deterioration in the voice recognition rate and voice quality, the following points should be observed:

❒ The voice recognition cannot be performed while voice guidance or the beep sound is operating. Wait until the voice guidance or the beep sound is finished before saying your commands.

❒ Dialects or different wording other than hands-free prompts cannot be recognized by voice recognition. Speak in the wording specified by the voice commands.

❒ It is not necessary to face the microphone or approach it. Speak the voice commands while maintaining a safe driving position.

❒ Do not speak too slow or too loud.

❒ Speak clearly, without pausing between words or numbers.

❒ Close the windows and/or the convertible top to reduce loud noises from outside the vehicle, or turn down the airflow of the air conditioning system while Bluetooth Hands-Free is being used.

❒ Make sure the vents are not directing air up towards the microphone.

Note: If the voice recognition performance is not satisfactory. Refer to "Voice Recognition Related Problems" in "Troubleshooting" for further information.

Security Settings

If a pass code is set, the system cannot be activated unless the pass code is input.



Caution!

Do this function only when parked. It is too distracting to attempt while driving and you may make too many errors to be effective.

Pass Code Setting

1. Press the pickup button or talk button with a short press.
2. Say: [Beep] "Setup".
3. Prompt: "Select one of the following: Pairing options, confirmation prompts, language, pass code, select phone or select music player."
4. Say: [Beep] "Pass code".
5. Prompt: "Pass code is disabled. Would you like to enable it?"
6. Say: [Beep] "Yes".
7. Prompt: "Please say a 4-digit pass code. Remember this pass code. It will be required to use this system."
8. Say: [Beep] "XXXX" (say a desired 4-digit pass code, "PCode").
9. Prompt: "Pass code XXXX (Pass code, PCode). Is this correct?"
10. Say: [Beep] "Yes".
11. Prompt: "Pass code is enabled."

Using Bluetooth Hands Free With A Pass Code

Proceed as follows:

1. Press the pickup button or talk button with a short press.
2. Prompt: "Hands-Free system is locked. State the pass code to continue".
3. Say: [Beep] "XXXX" (say the set pass code "PCode").
4. If the correct pass code is input, voice guidance "XXXXXX... (Ex. "Mary's device") (Device tag) is connected" is announced. If the pass code is incorrect, voice guidance "XXXX (4-digit pass code, Pcode) incorrect pass code, please try again" is announced.

Canceling The Pass Code



Caution!

Do this function only when parked. It is too distracting to attempt while driving and you may make too many errors to be effective.

Proceed as follows:

1. Press the pickup button or talk button with a short press.
2. Say: [Beep] “Setup”.
3. Prompt: “Select one of the following: Pairing options, confirmation prompts, language, pass code, select phone or select music player”.
4. Say: [Beep] “Pass code”.
5. Prompt: “Pass code is enabled. Would you like to disable it”?
6. Say: [Beep] “Yes”.
7. Prompt: “Pass code is disabled”.

Confirmation Prompts

The confirmation prompt confirms the command content to the user before advancing to the operation requested by the user.

When this function is turned on, the system reads out the voice input command previously received and confirms whether the command is correct before advancing to the command execution.

When the confirmation prompt function is turned on: (Ex. “Calling John's device. Is this correct?”).

When the confirmation prompt function is turned off: (Ex. “Calling John's device”).

Note: If the confirmation prompt function is turned off when making an emergency call, the system reads out and confirms the command before executing it.

Proceed as follows:

1. Press the pickup button or talk button with a short press.
2. Say: [Beep] “Setup”.
3. Prompt: “Select one of the following: Pairing options, confirmation prompts, language, pass code, select phone or select music player”.
4. Say: [Beep] “Confirmation prompts”.
5. Prompt: “Confirmation prompts are on/off. Would you like to turn confirmation prompts off/on”?
6. Say: [Beep] “Yes”.
7. Prompt: “Confirmation prompts are off/on”.

Voice Recognition Learning Function (Speaker Enrollment)

The voice recognition learning function enables voice recognition appropriate to the characteristics of the user's voice.

If the recognition of the voice input commands to the system is not adequate, this function can largely improve the system's voice recognition of the user. If your voice can be recognized sufficiently without using this function, you may not realize the added benefit of the function.

To register your voice, the voice input command list must be read out. Read out the list when the vehicle is parked. Perform the registration in as quiet a place as possible.

The registration must be performed completely. The required time is a few minutes. The user needs to be seated in the driver's seat with the voice input command list for voice recognition learning open to the page indicated below.

When Voice Recognition Learning Is Done For The First Time

1. Press the pick-up button or talk button with a short press.
2. Say: [Beep] “Voice training”.
3. Prompt: “This operation must be performed in a quiet environment while the vehicle is stopped. See the owner's manual for the list of required training phrases. Press and release the talk button when you are ready to begin. Press the hang-up button to cancel at any time”.
4. Press the talk button with a short press.
5. The voice guidance reads out the voice input command number (Ex. “Please read phrase one”).
6. Say: [Beep] “0123456789” (Say the voice input command for voice recognition learning [one to eight] according to the voice guidance).
7. Prompt: “Speaker enrollment is complete.”

Note: If an error occurred in the voice recognition learning, re-learning can be done by pressing the talk button with a short press.

Voice Recognition Re-Learning

If voice recognition learning has already been done.

1. Press the pick-up button or talk button with a short press.
2. Say: [Beep] “Voice training”.
3. Prompt: “Enrollment is enabled/ disabled. Would you like to disable/ enable or retrain”?
4. Say: [Beep] “Retrain”.
5. Prompt: “This operation must be performed in a quiet environment while the vehicle is stopped. See the owner's manual for the list of required training phrases. Press and release the talk button when you are ready to begin. Press the hang-up button to cancel at any time”.
6. Press the talk button with a short press.
7. The voice guidance reads out the voice input command number (Ex. “Please read phrase 1”).
8. Say: [Beep] “0123456789” (say the voice input command for voice recognition learning (1 to 8) according to the voice guidance).
9. Prompt: “Speaker enrollment is complete”.

Note: If an error occurred in the voice recognition learning, re-learning can be done by pressing the talk button with a short press.

Voice Input Command List For Voice Recognition Learning

When reading out, the following points must be observed:

❒ Read out the numbers one at a time correctly and naturally. (For example, “1234” must be read out “one, two, three, four” not “twelve, thirty four”).

❒ Do not read out parentheses. “(” and hyphens “-” are used for separating numbers in a phone number.

Ex. “(888) 555-1212” must be spoken “Eight, eight, eight, five, five, five, one, two, one, two.”

Phrase	Command
1	0123456789
2	(888) 555-1212
3	Call
4	Dial
5	Setup
6	Cancel
7	Continue
8	Help

Note:

❒ The applicable phrase appears in the audio display.

❒ After user voice registration is completed, voice guidance “Speaker enrollment is complete” is announced.

Voice Recognition Learning On/Off

1. Press the pick-up button or talk button with a short press.
2. Say: [Beep] “Voice training”.
3. Prompt: “Enrollment is enabled/ disabled. Would you like to disable/ enable or retrain”?
4. Say: [Beep] “Disable” or “Enable”.
5. When “Disable” is spoken, the voice recognition learning is turned off. When “Enable” is spoken, the voice recognition learning is turned on.
6. Prompt: “Speaker Enrollment is disabled/enabled”.

Making A Call

Phonebook Usage

Telephone calls can be made by saying the name of a person (voice tag) whose phone number has been registered in Bluetooth Hands-Free in advance. Refer to “Phonebook Registration”.

Proceed as follows:

1. Press the pickup button or talk button with a short press.
2. Say: [Beep] “Call”.
3. Prompt: “Name please”.
4. Say: [Beep] “XXXXX... (Ex. “John's phone” and say a voice tag registered in the phonebook)”.
5. Prompt: “Calling XXXXX... (Ex. “John's phone”) XXXX (Ex. “at home”). Is this correct?”.
6. Say: [Beep] “Yes”.
7. Prompt: “Dialing”.

Note: The “Call” command and the voice tag can be combined. Ex. In Step 2, say, “Call John's phone”, then, Steps Three and Four can be skipped.

Phonebook Registration

Phone numbers can be registered to the Bluetooth Hands-Free phonebook.



Caution!

Do this function only when parked. It is too distracting to attempt while driving and you may make too many errors to be effective.

Proceed as follows:

1. Press the pick-up button or talk button with a short press.
2. Say: [Beep] “Phonebook”.
3. Prompt: “Select one of the following: New entry, edit, list names, delete, erase all or import contact”.
4. Say: [Beep] “New entry”.
5. Prompt: “Name please”.
6. Say: [Beep] “XXXXX... (Ex. “Mary's phone” and say a voice tag for the name registered)”.
7. Prompt: “Adding XXXXX... (Ex. “Mary's phone”).

8. Say: [Beep] “Yes”.

9. Prompt: “Home, Work, Mobile, or Other”?

10. Say: [Beep] “Mobile” (Say “Home”, “Work”, “Mobile”, or “Other”, for the desired location to be registered).

11. Prompt: “Mobile (Location to be registered). Is this correct”?

12. Say: [Beep] “Yes”.

13. Prompt: “Number, please”.

14. Say: [Beep] “XXXXXXXXXX” (say the phone number to be registered).

15. Prompt: “XXXXXXXXXX (Phone number registration). After the beep, continue to add numbers, or say Go-Back to enter the last entered numbers, or press the Pick-Up button to save the number”.

16. (Registration) Press the pickup button or say “Enter”, then go to Step 17. (Adding/inputting telephone number).

Say, “XXXX” (desired telephone number), then go to previous step. (Telephone number correction) Say, “Go Back”. The prompt replies, “Go Back. The last entered numbers have been removed”. Then go back to Step 13.

17. Prompt: “Number saved. Would you like to add another number for this entry”?

18. Say: [Beep] “Yes” or “No”.

19. If “Yes”, an additional phone number registration can be made for the same entry.

If “No”, the system returns to standby status.

Import Contact

Phonebook data from your device (Mobile phone) can be sent and registered to your Bluetooth Hands-Free phonebook using Bluetooth.

Proceed as follows:

1. Press the pickup button or talk button with a short press.

2. Say: [Beep] “Phonebook”.

3. Prompt: “Select one of the following: New entry, edit, list names, delete, erase all or import contact.”

4. Say: [Beep] “Import contact”.

5. Prompt: “The hands free System is ready to receive a contact from a phone. Only a home, a work, and a mobile number can be imported. This process requires operation of a mobile phone. Refer to the phone's manual for more information”.

6. Device (Mobile phone) operation: Select one entry from the phonebook and send it using Bluetooth.

7. Prompt: “X (number of locations which include data) numbers have been imported. What name would you like to use for these numbers”?

8. Say: [Beep] “XXXXX... (Ex. “Mary's phone”)” (say a voice tag for the name registered).

9. Prompt: “Adding XXXXX... (Ex. “Mary's phone”) (Voice tag). Is this correct”?

10. Say: [Beep] “Yes”.

11. Prompt: “Number saved. Would you like to import another contact”?

12. Say: [Beep] “Yes” or “No”.

13. If “Yes”, the procedure proceeds to Step 5. If “No”, the system returns to standby status.

Editing Phonebook

The data registered to the Bluetooth Hands-Free phonebook can be edited.

Caution!

Do this function only when parked. It is too distracting to attempt while driving and you may make too many errors to be effective.

Proceed as follows:

1. Press the pick-up button or talk button with a short press.
2. Say: [Beep] “Phonebook”.
3. Prompt: “Select one of the following: New entry, edit, list names, delete, erase all or import contact”.
4. Say: [Beep] “Edit”.
5. Prompt: “Please say the name of the entry you would like to edit or say, “List names”.
6. Say: [Beep] “XXXXX... (Ex. “Mary's phone”)” (say the voice tag for the registered name to be edited in the phonebook).
7. Prompt: “Home, Work, Mobile, or Other?”
8. Say: [Beep] “Home” (say the registered location to be edited: “Home”, “Work”, “Mobile”, or “Other”).
9. Prompt: “XXXXX... (Ex. “Mary's phone”) (Registered voice tag) XXXX (Ex. “Home”) (registered location). Is this correct”?
10. Say: [Beep] “Yes”.
11. Prompt: “The current number is XXXXXXXXXX (Ex. “555-1234”) (Currently registered number). New number, please.”

Note: If there was no previous phone number registered to a location (Ex. “Work”), the prompt will only read out “Number, please”.

12. Say: [Beep] “XXXXXXXXXX (Ex. “555-5678”)” (say the new phone number to be registered).
13. Prompt: “XXXXXXXX (Telephone number) After the beep, continue to add numbers, or say Go-Back to reenter the last entered numbers, or press the Pick-Up button to save the number”.
14. Number Change) Press the pickup button, then go to next step.

Adding/inputting telephone number: Say, “XXXX” (desired telephone number), then go to previous step.

Telephone number correction: Say, “Go Back”. The prompt replies, “Go Back. The last entered numbers have been removed. Number, please”. Then go back to Step 12.

15. Prompt: “Number changed.”

Phonebook Data Deletion

Individual data registered to the Bluetooth Hands-Free phonebook can be cleared.

Caution!

Do this function only when parked. It is too distracting to attempt while driving and you may make too many errors to be effective.

1. Press the pick-up button or talk button with a short press.
2. Say: [Beep] “Phonebook”.
3. Prompt: “Select one of the following: New entry, edit, list names, delete, erase all or import contact.”
4. Say: [Beep] “Delete”.
5. Prompt: “Please say the name of the entry you would like to delete or say, “List names”.
6. Say: [Beep] “XXXXX... (Ex. “John's phone”)” (say the registered voice tag to be deleted from the phonebook).
7. Prompt: “Deleting XXXXX... (Ex. “John's phone”) (registered voice tag) Home (Registered location). Is this correct”?
8. Say: [Beep] “Yes”.

9. Prompt: “XXXXX... (Ex. “John's phone”) (registered voice tag) Home (registered location) deleted”.

Complete Deletion Of The Phonebook Data

All data registered to the Bluetooth Hands-Free phonebook can be erased.

Caution!

Do this function only when parked. It is too distracting to attempt while driving and you may make too many errors to be effective.

Proceed as follows:

1. Press the pick-up button or talk button with a short press.
2. Say: [Beep] “Phonebook”.
3. Prompt: “Select one of the following: New entry, edit, list names, delete, erase all or import contact.”
4. Say: [Beep] “Erase all”.
5. Prompt: “Are you sure you want to erase everything from your Hands Free system phonebook?”
6. Say: [Beep] “Yes”.
7. Prompt: “You are about to delete everything from your Hands Free system phonebook. Do you want to continue?”
8. Say: [Beep] “Yes”.
9. Prompt: “Please wait, erasing the Hands Free system phonebook.”
10. Prompt: “Hands-Free system phonebook erased.”

Read-Out Of Names Registered To The Bluetooth Hands-Free Phonebook

Bluetooth Hands-Free can read out the list of names registered to its phonebook.

Proceed as follows:

1. Press the pick-up button or talk button with a short press.
2. Say: [Beep] “Phonebook”.
3. Prompt: “Select one of the following: New entry, edit, list names, delete, erase all or import contact”.
4. Say: [Beep] “List names”.
5. Prompt: “XXXXX..., XXXXX..., XXXXX... (Ex. “John's phone”, Mary's phone, Bill's phone)” (voice guidance reads out the voice tags registered to the phonebook). Press the talk button with a short press during the readout at the desired name, and then say one of the following voice commands to execute it.

❒ “Continue”: Continues the list readout.

❒ “Call”: Calls the registered phonebook data when the talk button is short pressed.

❒ “Edit”: Edits the registered phonebook data when the talk button is short pressed.

❒ “Delete”: Deletes the registered phonebook data when the talk button is short pressed.

❒ “Previous”: Returns to the previous phonebook data in readout when the talk button is short pressed.

6. Prompt: “End of list, would you like to start from the beginning”?
7. Say: [Beep] “No”.
8. The procedure returns to Step 3.

Redial Function

Redialing the number of the person previously dialed using the phone is possible.

Proceed as follows:

1. Press the pick-up button or talk button with a short press.
2. Say: [Beep] “Redial”.
3. Prompt: “Dialing”.

Telephone Number Input



Caution!

Practice this while parked until you are confident you can do it while driving in a non-taxing road situation. If you are not completely comfortable, make all calls from a safe parking position, and only start driving when you can devote your full attention to driving.

Proceed as follows:

1. Press the pickup button or talk button with a short press.
2. Say: [Beep] “Dial”.
3. Prompt: “Number, please”.
4. Say: [Beep] “XXXXXXXXXX (Telephone number)”.
5. Prompt: “XXXXXXXXXX. (Telephone number). After the beep, continue to add numbers, or say Go-Back to re-enter the last entered numbers, or press the Pick-Up button to execute dialing”.
6. (Dialing)

Press the pick-up button or say “Dial”, then go to next step.

(Adding/inputting telephone number)

Say, “XXXX” (desired telephone number), then go to previous step.

(Telephone number correction)

Say, “Go Back”. The prompt replies, “Go Back. The last entered numbers have been removed”. Then go back to Step 3.

1. Prompt: “Dialing”.

Note: The “Dial” command and a telephone number can be combined. Ex. In Step Two, say, “Dial 123-4567” then, Steps 3 and 4 can be skipped.

Emergency Calls

A call can be made to the emergency phone number (911: U.S.A./Canada, 066: Mexico) using the voice input command. It may not function properly in some areas in Mexico.

Proceed as follows:

1. Press the pickup button or talk button with a short press.
2. Say: [Beep] “Emergency”.
3. U.S.A./Canada vehicles - Prompt: “Dialing “911”, is this correct”?

Mexico vehicles - Prompt: “Dialing “066”, is this correct”?

4. Say: [Beep] “Yes”.
5. Prompt: “Dialing”.

Receiving An Incoming Call

Proceed as follows:

1. Prompt: “Incoming call, press the pick-up button to answer”.
2. To accept the call, press the pick-up button.

To reject the call, press the hangup button.

Hanging Up A Call

Press the hang-up button during the call. A beep sound will confirm that call is ended.

Mute

The microphone can be muted during a call.

1. Press the talk button with a short press.
2. Say: [Beep] “Mute”.
3. Prompt: “Microphone muted”.

Canceling Mute

Proceed as follows:

1. Press the talk button with a short press.
2. Say: [Beep] “Mute off”.
3. Prompt: “Microphone unmuted”.

Transferring A Call From Hands-Free To A Device (Mobile Phone)

Communication between the hands-free unit and a device (mobile phone) is canceled, and the line can be switched to a standard call using a device (mobile phone).

Proceed as follows:

1. Press the talk button with a short press.
2. Say: [Beep] “Transfer call”.
3. Prompt: “Transferred call to phone”.

Transferring A Call From A Device (Mobile Phone) To Hands-Free

Communication between devices (mobile phone) can be switched to Bluetooth Hands-Free.

Proceed as follows:

1. Press the talk button with a short press.
2. Say: [Beep] “Transfer call”.
3. Prompt: “Transferred call to Hands Free system”.

Call Interrupt

A call can be interrupted to receive an incoming call from a third party.

Switch to a new incoming call using the following methods.

Method 1

Proceed as follows:

1. Press the pickup button.
2. Prompt: “Swapping calls”.

Method 2

Proceed as follows:

1. Press the talk button with a short press.
2. Say: [Beep] “Swap calls”.
3. Prompt: “Swapping calls”.

Note:

❒ To refuse an incoming call, press the hang-up button.

❒ After receiving a new incoming call, the previous call is placed on hold.

Switching Calls

Switching back to the previous call can also be done.

Method 1

Proceed as follows:

1. Press the pickup button.
2. Prompt: “Swapping calls”.

Method 2

Proceed as follows:

1. Press the talk button with a short press.
2. Say: [Beep] “Swap calls”.
3. Prompt: “Swapping calls”.

Three-Way Call Function

1. Press the talk button with a short press.
2. Say: [Beep] “Join calls”.
3. Prompt: “Joining calls”.

Making A Call Using A Telephone Number

Proceed as follows:

1. Press the talk button with a short press.
2. Say: [Beep] “Dial”.
3. Prompt: “Number, please”.
4. Say: [Beep] “XXXXXXXXXX (Telephone number)”.

5. Prompt: “XXXXXXXXXX. (Telephone number) After the beep, continue to add numbers, or say Go-Back to reenter the last entered numbers, or press the Pick-Up button to execute dialing”.

6. (Dialing) Press the pick-up button or say “Dial”, then go to next step.

Adding/inputting telephone number)

Say, “XXXX” (desired telephone number), then go to previous step.

(Telephone number correction)

Say, “Go Back”. The prompt replies, “Go Back. The last entered numbers have been removed”. Then go back to Step 3.

7. Prompt: “Dialing”.

Making A Call Using The Phone-book

Proceed as follows:

1. Press the talk button with a short press.

2. Say: [Beep] “Call”.

3. Prompt: “Name please”.

4. Say: [Beep] “XXXXX... (Ex. “John's phone” and say a voice tag registered in the phonebook).

5. Prompt: “Calling XXXXX... (Ex. “John's phone”) XXXX (Ex. “at home”). Is this correct?” (voice tag and phone number location registered in phonebook).

6. Say: [Beep] “Yes”.

7. Prompt: “Dialing”.

Redialing Function

Proceed as follows:

1. Press the talk button with a short press.

2. Say: [Beep] “Redial”.

3. Prompt: “Dialing”.

Ending The Current Call

Press the hang-up button during the call.

DTMF (Dual Tone Multi-Frequency Signal) Transmission

This function is used when transmitting DTMF via the user's voice.

The receiver of a DTMF transmission is generally a home telephone answering machine or a company's automated guidance call center (when you send tone signals back according to the voice guidance recording).

Proceed as follows:

1. Press the talk button with a short press.

2. Say: [Beep] “XXXX... send” (Say DTMF code).

3. Prompt: “Sending XXXX... (DTMF code)”.

Bluetooth Audio

Response Profile

❒ A2DP (Advanced Audio Distribution Profile) Ver. 1.0/1.2

❒ AVRCP (Audio/Video Remote Control Profile) Ver. 1.0/1.3.

A2DP is a profile which transmits only audio to the Bluetooth unit. If your Bluetooth audio device corresponds only to A2DP, but not AVRCP, you cannot operate it using the control panel of the vehicle's audio system.

In this case, only the operations on the mobile device are available the same as when a portable audio device for a non-compliant Bluetooth device is connected to the AUX terminal.

Function	A2DP	AVRCP	
		Ver. 1.0	Ver. 1.3
Playback	–	X	X
Pause	–	X	X
File (Track) Up/Down	–	X	X
Reverse	–	–	X
Fast-Forward	–	–	X
Text Display	–	–	X

X Available

– Not available

Note:

❒ The battery consumption of Bluetooth audio devices increases while Bluetooth is connected.

❒ If a general mobile phone device is USB connected during music playback over the Bluetooth connection, the Bluetooth connection is disconnected. For this reason, you cannot have music playback over a Bluetooth connection and music playback using a USB connection at the same time.

❒ The system may not operate normally depending on the Bluetooth audio device.

How To Use The Bluetooth Audio System

Switching To Bluetooth Audio Mode

To listen to music or voice audio recorded to a Bluetooth audio device, switch to the Bluetooth audio mode to operate the audio device using the audio system control panel.

Any Bluetooth audio device must be paired to the vehicle's Bluetooth unit before it can be used.

Refer to “Bluetooth Preparation”.

Proceed as follows:

1. Turn on the Bluetooth audio device's power.

2. Switch the ignition to ACC or ON. Make sure that the music note symbol is displayed in the audio display. The symbol is not displayed if an un-paired Bluetooth audio device is being used or the vehicle's Bluetooth unit has a malfunction.

Note: Some Bluetooth audio devices need a certain amount of time before the music note symbol is displayed.

3. Press the MEDIA button to switch to the Bluetooth audio mode and start playback.

If The Current Device Version Is Lower Than Avrcp Ver. 1.3:

“BT Audio” is displayed.

If the current device is AVRCP Ver. 1.3, the playback time is displayed.

Note:

❒ If the Bluetooth audio device does not begin playback, press the Play/Pause button.

❒ If a call is received on a hands-free mobile phone during playback from the Bluetooth audio device, the playback is stopped. Playback from the Bluetooth audio device resumes after the call ends.

Playback

❒ To listen to a Bluetooth audio device over the vehicle's speaker system, switch the mode to Bluetooth audio mode.

❒ To stop playback, press the Play/Pause button (Four).

❒ Press the button again to resume playback.

Selects The Next File (Track)

Short-press the track up button .

Selects The Beginning Of The Current File (Track)

Short-press the track up button .

Fast-Forward/Reverse (AVRCP Ver. 1.3)

Fast-Forward

Press and hold the fast-forward button .

Reverse

Press and hold the reverse down button .

Switching The Display (Only AVRCP Ver. 1.3)

The information displayed on the audio display changes as follows each time the text button (Three) is pressed during playback.

Button	Information Displayed On Audio Display
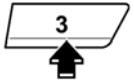	Elapsed time
	Album name
	Song name
	Artist name

❒ If title information is not available, “NO TITLE” is displayed.

❒ This unit cannot display some characters. Characters which cannot be displayed are indicated by an asterisk (*).

Display Scroll

Only 13 characters can be displayed at one time.

To display the rest of the characters of a long title, press and hold the text button.

The display scrolls the next 13 characters.

Press and hold the text button again after the last 13 characters have been displayed to return to the beginning of the title.

Bluetooth Audio Device Information Display

If a Bluetooth audio device is connected, the following information is displayed in the audio display.

Phrase	AVRCP Lower Than 1.3	AVRCP Ver 1.3
Device Name	X	X
Title	–	X
Artist Name	–	X
Album Name	–	X
File Number	–	X
Playback Time	–	X
Folder Number	–	–

X: Available

—: Not available

Note: Some information may not display depending on the device, and if the information cannot be displayed, “NO TITLE” is indicated.

Bluetooth Hands-Free Customer Service

If you have any problems with Bluetooth, contact an authorized dealer.

Bluetooth Device Pairing (Connection Problems)

Symptom	Cause	Solution Method
Unable To Perform Pairing	—	First make sure the device is compatible with the Bluetooth unit, and then check whether the Bluetooth function and the Find Mode/Visible setting (*) on the device are turned on. If pairing is still not possible after this, contact an authorized dealer.
Pairing Cannot Be Performed Again	The pairing information paired to the Bluetooth unit or device is not recognized correctly.	Perform pairing using the following procedure: ❒ Clear “124 Spider” stored in the device. ❒ Perform pairing again.
Unable To Perform Pairing	The Bluetooth function and the Find Mode/Visible setting (*) on the device may turn off automatically after a period of time has elapsed depending on the device.	Check whether the Bluetooth function and the Find Mode/Visible setting (*) on the device are turned on and pairing or reconnect.
Does Not Connect Automatically When Starting The Engine		
Automatically Connects, But Then Disconnects Suddenly		
Disconnects Intermittently	The device is in a location in which radio wave interference can occur easily, such as in a bag or in a rear pocket of a pair of pants.	Move the device to a location in which radio wave interference is less likely to occur.
Does Not Connect Automatically When Starting The Engine	The pairing information is updated when the device OS is updated.	Perform pairing again.

(*) Setting which detects the existence of a device external to the Bluetooth unit

Note:

❒ When the OS of the device is updated, the pairing information may be deleted. If this happens, reprogram the pairing information to the Bluetooth unit.

❒ If you pair your phone which has already been paired to your vehicle more than once in the past, you need to delete “124 Spider” on your mobile device. Then, execute the Bluetooth search on your mobile device once again, and pair to a newly detected “124 Spider”.

❒ Before you pair your device, make sure that Bluetooth is “ON”, both on your phone and on the vehicle.

Voice Recognition Related Problems

Symptom	Cause	Solution Method
Poor Voice Recognition False Recognition Of Numbers	❒ Excessive, slow speech ❒ Excessive, forceful speech (shouting) ❒ Speaking before the beep sound has ended ❒ Loud noise (speaking or noise from outside/inside vehicle) ❒ Airflow from A/C is blowing against the microphone ❒ Speaking in off-standard expressions (dialect)	Regarding the causes indicated on the left, be careful with how you speak. In addition, when numbers are spoken in a sequence, recognition ability will improve if no stop is placed between the numbers.
Poor Voice Recognition	There is a malfunction in the microphone.	A poor connection or malfunction with the microphone may have occurred. Contact an authorized dealer.
Phone-Related Voice Recognition Is Disabled	There is a problem with the connection between the Bluetooth unit and the device.	If there is any malfunction after checking the pairing situation, check for device pairing or connection problems.

Symptom	Cause	Solution Method
Names In The Phonebook Are Not Easily Recognized	The Bluetooth system is under a condition in which recognition is difficult	By carrying out the following measures, the rate of recognition will improve. ❒ Clear memory from the phonebook which is not used very often. ❒ Avoid shortened names, use full names (recognition improves the longer the name is. By not using names such as “Mum”, “Dad”, recognition will improve).
When Operating The Audio, A Song Name Is Not Recognized	Song names cannot be recognized by voice	—
You Want To Skip Guidance	—	Guidance can be skipped by quickly pressing and releasing the Talk button.

Regarding Problems With Calls

Symptom	Cause	Solution Method
When Starting A Call, Vehicle Noise From The Other Party Can Be Heard.	For about three seconds after starting a call, the Bluetooth unit's Noise Suppression function requires time to adapt to the call environment.	This does not indicate a problem with the device.
The Other Party Cannot Be Heard Or The Speaker's Voice Is Quiet.	The volume is set at zero or low.	Increase the volume.

Other Problems

Symptom	Cause	Solution Method
The Indication For The Remaining Battery Is Different Between The Vehicle And The Device.	A maximum of 60 seconds is required.	—
When A Call Is Made From The Vehicle, The Telephone Number Is Updated In The Incoming/Outgoing Call Record But The Name Does Not Appear.	Some types of cell phones do not synchronize automatically.	If the number has been registered into the phonebook, the incoming/outgoing call record is updated by the name in the phonebook when the engine is restarted.
The Cell Phone Does Not Synchronize With The Vehicle Regarding The Incoming/ Outgoing Call Record.	The number has not been registered into the phonebook.	Operate the cell phone for synchronization.
It Takes A Long Time To Complete The Function For Changing The Language.	The indication method is different between the vehicle and the device.	—



17R3-526-AB
FIAT® 124 SPIDER
Second Edition
3.0 Radio Book

© 2016 FCA US LLC. All Rights Reserved. FIAT is a registered trademark of FCA Group Marketing S.p.A., used under license by FCA US LLC.