Fanttik

NEX T1 Max

Precision Soldering iron kit

User Manual

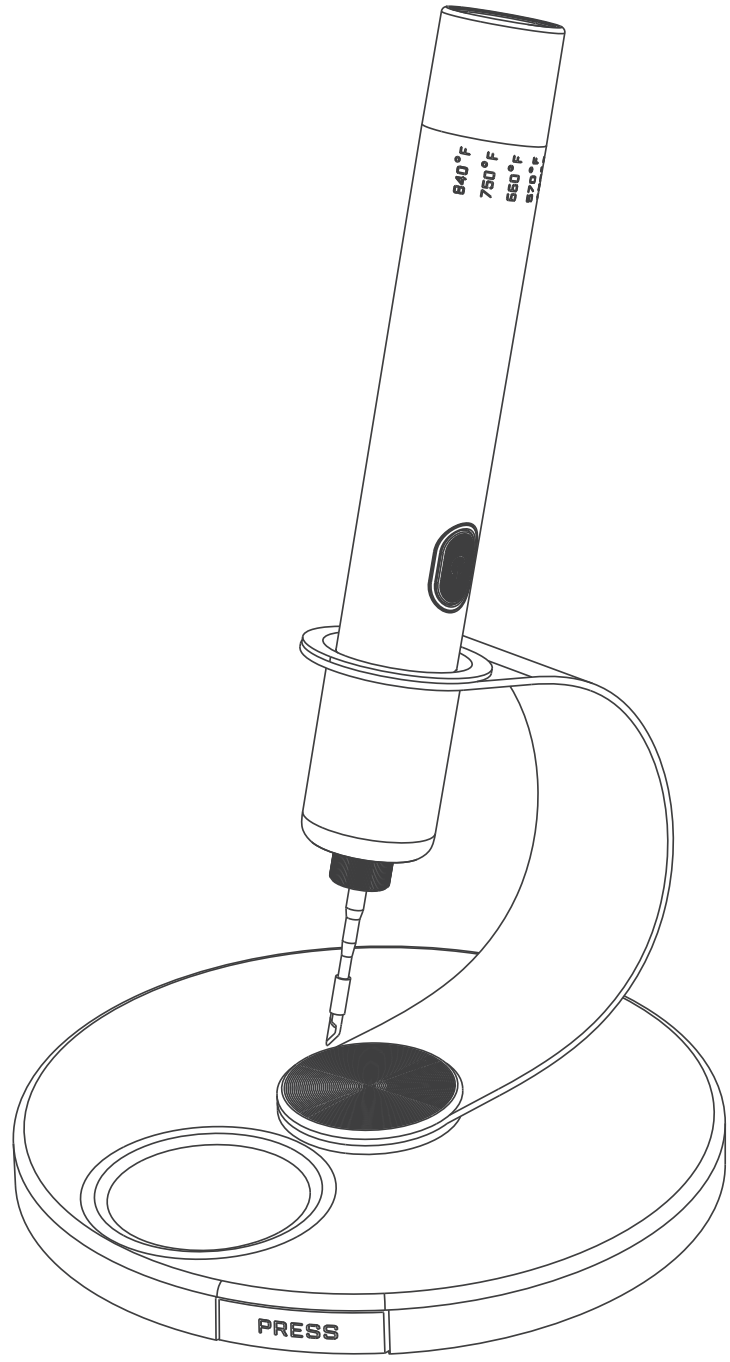

Please read this instruction manual carefully before use and keep it for future reference.

Contents

1. Safety Warnings ---------- 02

2. Product Overview ---------- 04

3. Operation and Functions ---------- 05

4. Specifications ---------- 09

5. Troubleshooting ---------- 10

1. Safety Warnings

WARNING! Read all safety warnings and all instructions marked with the symbol. Failure to comply with the following list of instructions may cause electric shock, fire and/or serious injury.

Save all warnings and instructions for future reference.

The term "power tool" in the warning refers to a mains-operated (corded) power tool or a battery-operated (Cordless) power tools.

- Keep the work area clean and bright. Cluttered and dark venues can cause accidents.
- Do not operate power tools in explosive environments such as flammable liquids, gases or dust. Sparks from power tools can ignite dust or gases.
- Keep away from children and bystanders when operating power tools. Lack of concentration can cause you to lose focus on your tools control.
- Do not disassemble, open or chop tools.
- Never expose tools to heat or flame. Avoid storage in direct sunlight.
- Do not short-circuit the exposed terminals of the tool.
- Do not subject the tool to mechanical impact.
- Once the battery leaks, do not allow the leaked liquid to come into direct contact

with your skin or eyes.

- If contact occurs, flush the affected area with plenty of water and seek medical attention promptly.
- Keep tools away from children.
- Keep tools clean and dry.
- If the tool becomes extremely dirty while charging, wipe it with a clean, dry cloth.
- Tools should be charged before use.
- Do not leave the tool charged for long periods of time when not in use.
- The battery has the best performance when used at normal temperature (20℃±5℃).
- Dispose of batteries correctly.
- It is forbidden to touch the tip of the heating machine with your hands. If you get burned, please seek medical advice in time.

2. Product Overview

Please read this manual carefully before use and keep it in a safe place.

Thanks for using the portable soldering iron.

1.Soldering iron tip
2.Fastening nut
3.Led light
4.Anti-scalding rubber cover
5.Power switch
6.Work indicator light
7.Aluminum shell
8.Thermostat knob
9.Type-C charging port
10.Charging cable
11.Soldering iron
12.Swivel stand
13.Base
14.Sponge box
15.Sponge
16.Soldering iron tip storage box

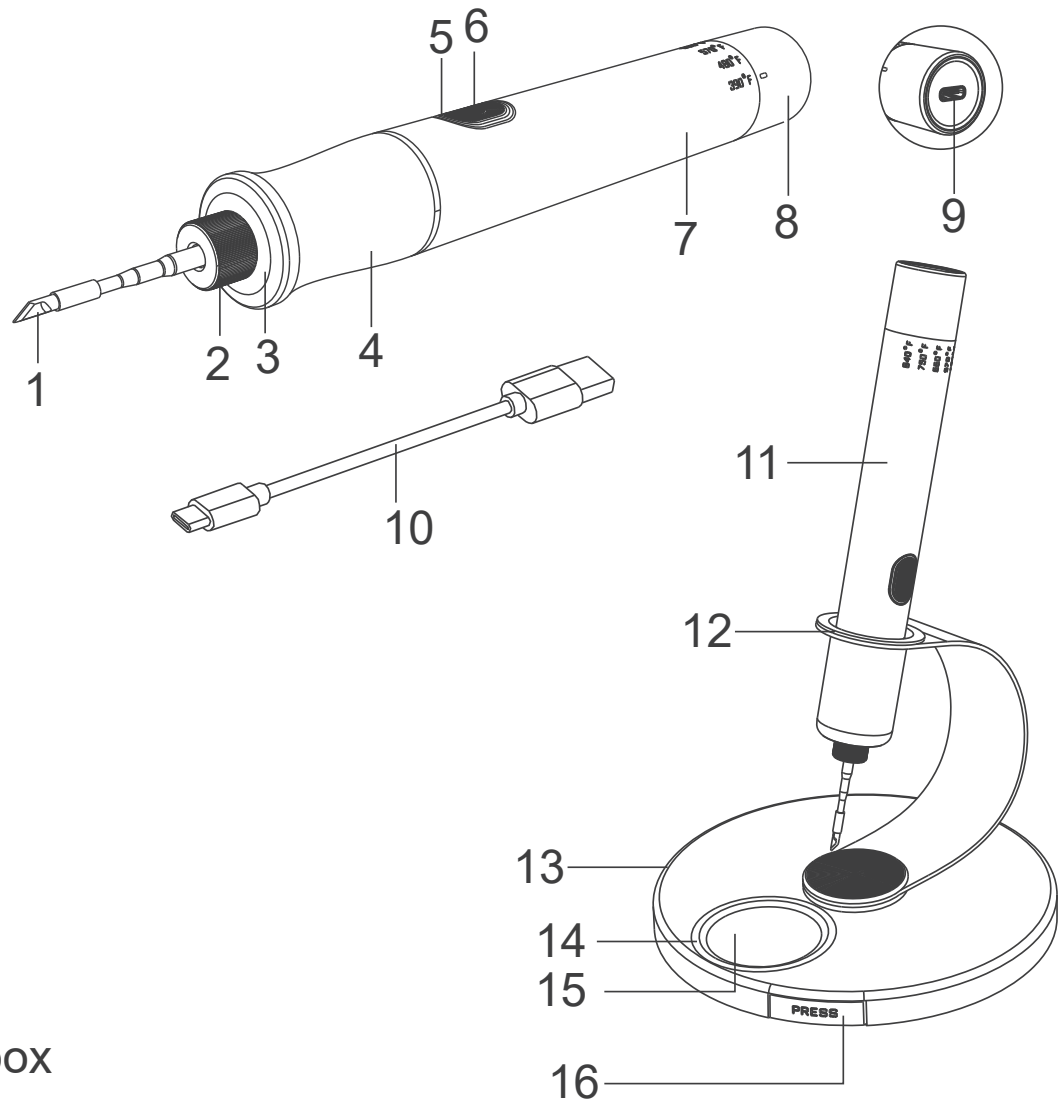

3. Operation and Functions

Install the soldering iron tip

1. Press the storage drawer ① on the base and take out the soldering iron tip.
2. Loosen the nut ② .
3. Insert the soldering iron tip ③ into the nut.
4. Tighten the nut.

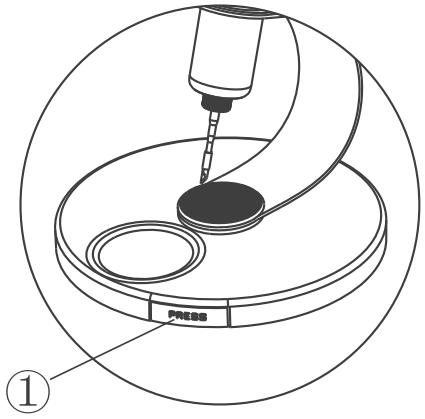

Take out the tip

Step 1

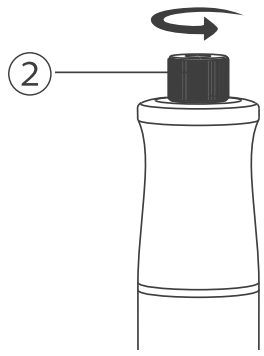

Unscrew the nut

Step 2

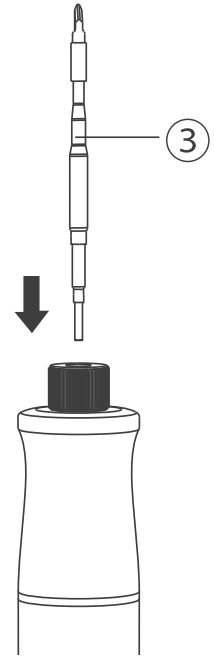

Insert the tip

Step 3



Lock the nut

Step 4

Turn on/off the soldering iron heating function

- Press and hold the button switch for 3 seconds: the front LED light lights up, the red breathing light flashes, and the soldering iron starts heating function until the green light is on, it can be used normally.
- Press and hold the power switch again for 3 seconds, the front LED light and work indicator light will turn off, the soldering iron heating function will be off.
- If the soldering iron tip is not installed properly, resulting in poor contact, a green light will appear when the heating function is turned on.
- A quick flashing prompt indicates that you need to reinstall the soldering iron tip and then turn on the heating function.

Smart sleep

- After the soldering iron turns on the heating function, if there is no vibration for 30 seconds, it will automatically enter the sleep state.
- Pick up the soldering iron with your hand and it will heat automatically.
- When the heating function is turned on but there is no vibration sensing for 15 minutes, it means that you may not be using the soldering iron, so it will automatically shut down.

6 levels of temperature adjustment

- Turn the temperature adjustment knob to the left or right, and align the mark on the temperature adjustment knob to the desired gear.
- When the red light is breathing, it means heating to the target temperature.The green light is always on to indicate that the target temperature has been reached.

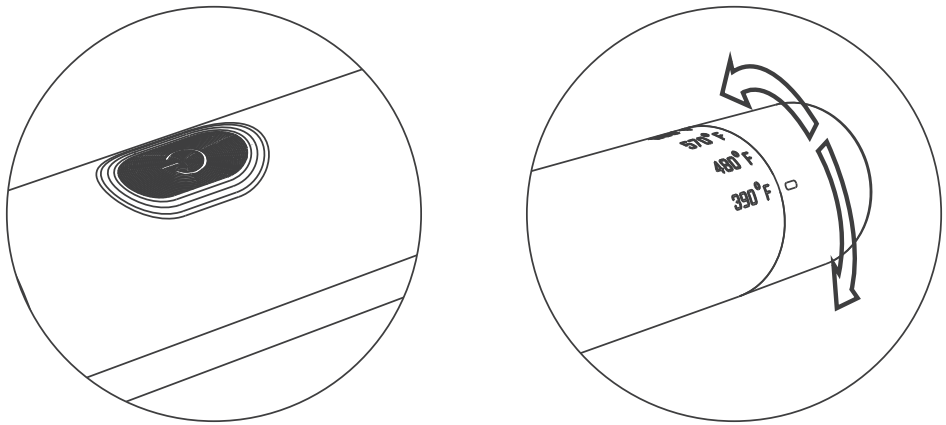

Assembling the bracket and base

- Align the three buckles on the rotating bracket with the buckle holes on the base and press down at the same time to assemble. After assembly, the stand can be rotated 360 degrees.
- Open/close storage box.

  Press the storage box with your hand and it will pop out; press the storage box again and it will lock.

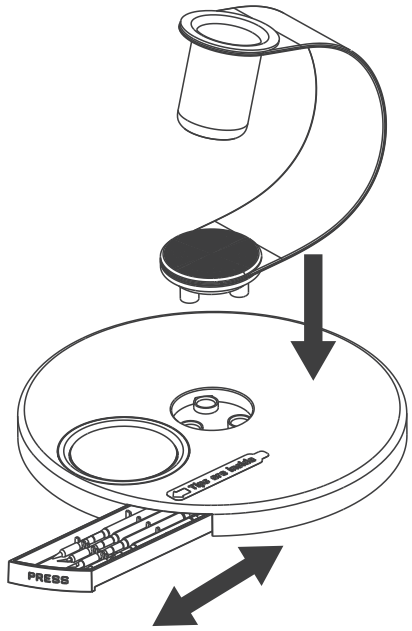

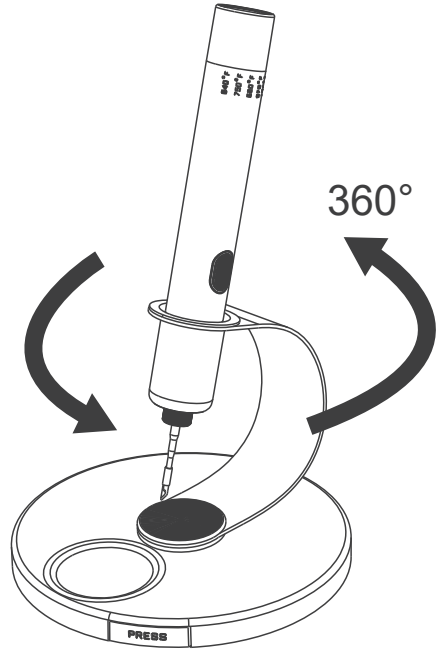

Charging and battery tips

1. The white breathing light flashes during charging.
2. The white light stays on when fully charged.
3. When the voltage is lower than 3.75V, the red light flashes quickly to prompt charging.
4. When the voltage is lower than 3.4V, it will automatically shut down.
5. When the charger is connected to use the heating function, it will automatically switch to the charger for power supply and heating.
6. Power adapter DC:5V ⎓ 2A charging cable Type-C.

4. Specifications

Product Name	Cordless precision soldering iron kit
Product Model	NEX T1 Max
Color	Deep grey
Soldering Iron Dimensions	Φ24*180 mm
Base Bracket Dimensions	Φ146 x H116 mm
AC Output Power	16W
DC Output Power	12W
Charging power	5V ⎓ 2A
Rated Voltage	3.65V
Lithium Battery	2600mAh
Charging time	1.5-2H

5. Troubleshooting

Fault	Cause	Solution
The soldering iron cannot heat (green light flashes quickly)	The soldering iron tip is not installed properly	Reinstall the soldering iron tip
The soldering iron automatically shuts down after being turned on	Low battery	Need to charge
Automatically shuts down after prolonged heating	Discharge high temperature protection	Restart
Automatically switches to charging when heating	Power/charging cable mismatch	Replace power/ charging cable

929-693-6066 MON-FRI 9AM-5PM (ET)
www.fanttik.com
support@fanttik.com
METASEE LLC
12 GREENWAY PLZ STE 1161A HOUSTON,
TX 77046-1203

Made in China

