Fanttik

NEX K2 Nano Electric Precision Drill Kit

User Manual

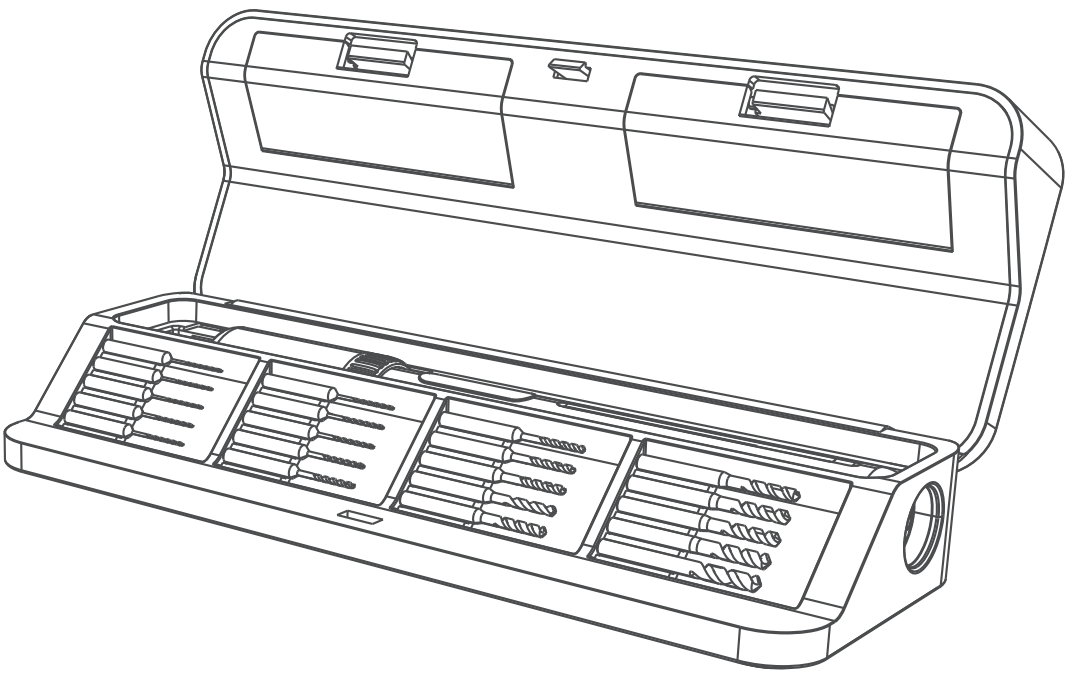

Please read this instruction manual carefully before use
and keep it for future reference.

Contents

1. Safety Warnings - 02

2. Package Contents - 03

3. Product Overview - 04

4. Operation and Funtions - - - - - - - - - - - - - - - - 06

5. Specifications - 10

6. Warranty Card - 12

1. Safety Warnings

- Avoid moisture, dust, and drop.
- Do not store the product in extreme temperature environment.
- Stay alert, watch what you are doing and use common sense when operating. Do not operate while you are tired or under the influence of drugs, alcohol or medication.
- This product is not a toy and should not be used by kids under 10 years old.
- This product has built-in battery, do not throw it into fire and should be recycled by local laws and regulations.
- Do not dismantle the machine by yourself. Have your power tool serviced by a qualified repair person or contact us for advice.

2.Package Contents



Electric Precision Drill x 1

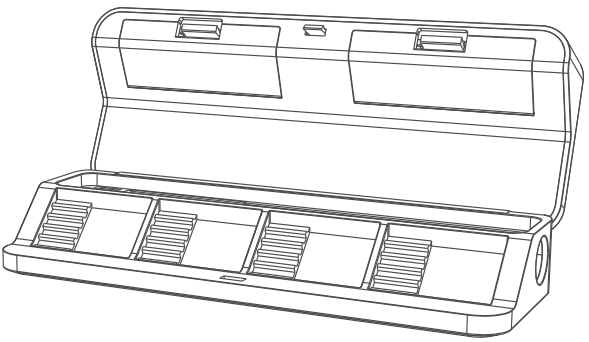

Storage Case x 1

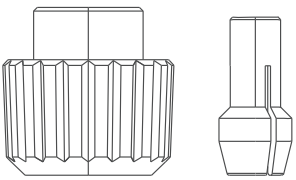

Chuck Accessories x1

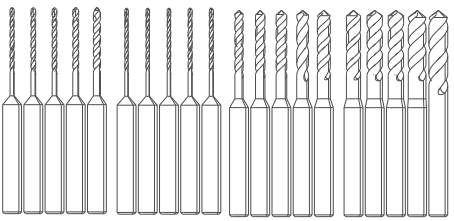

HSS Drill Bits x 20



User Manual x 1



Type-C charging cable x 1

3.Product Overview

Electric Precision Drill

1. Type-C charging port
2. Charging Indicator
3. On/Off Knob
4. Direction Indicator
5. Forward/Reverse Button
6. High/Low Speed Switch Knob
7. LED Lighting
8. Quick-Install Drill Chuck

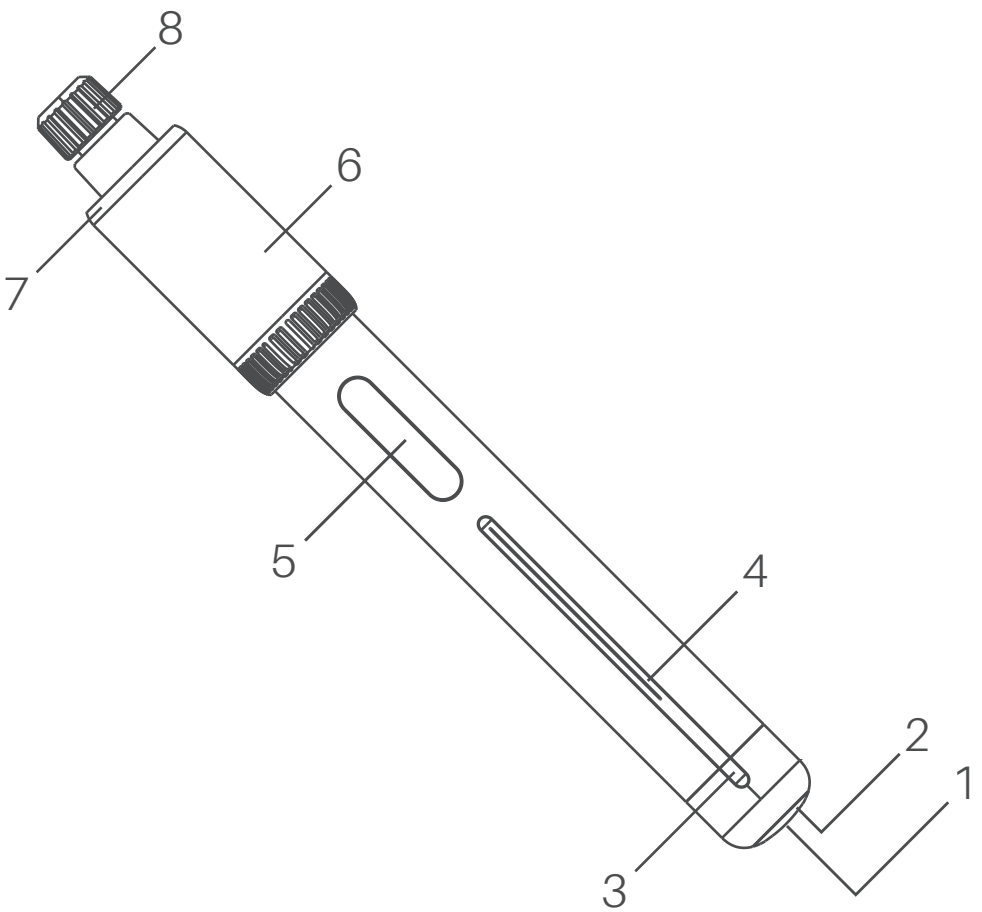

Storage Case

1.Open/Close Button
2.Charging Port
3.Storage Compartment
4.Drill bits
5.Electric Precision Drill

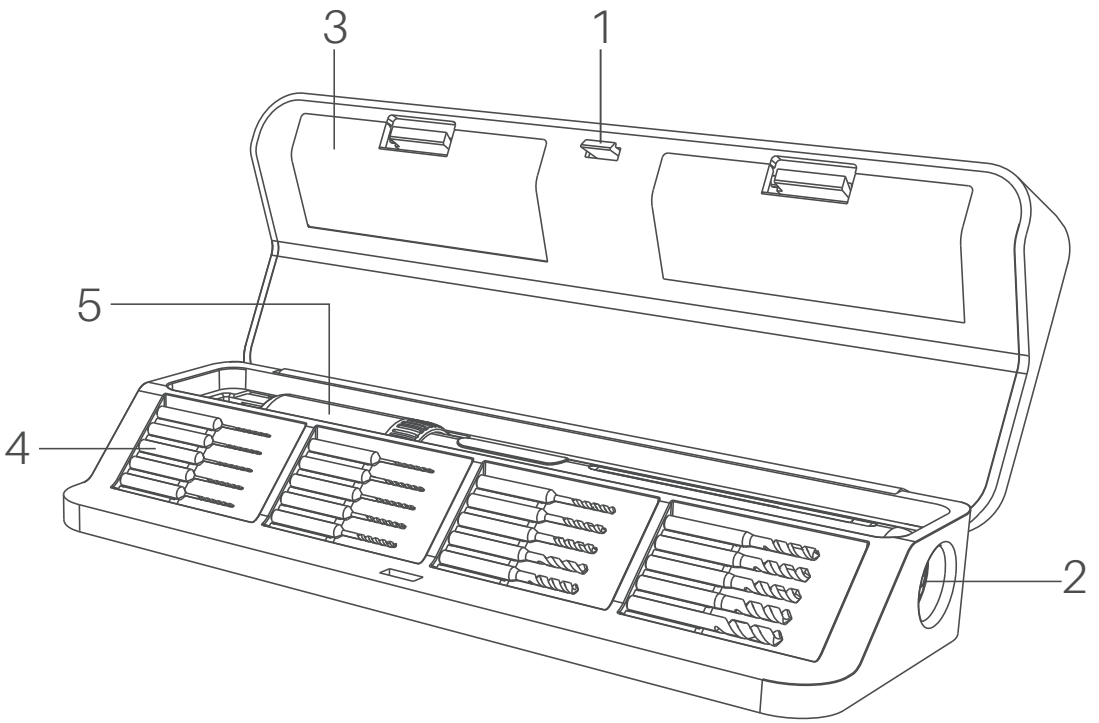

4.Operation and Funtions

How to open/close the Storage Case

- Press the Open/Close button to open the Storage Case.
- Close the storage case and the button will automatically lock to completely close the
- storage case.

Storage of Drill Bits

- Drill bits are stored in the magnetic holders in the storage. After use, place the drill bit back into the magnetic holder, and it will be held in place by magnet.

How to Pick up the Electric Precision Drill

- Pick up the strip firstly and then the Drill will lift with it, then you can pick up the Drill.
- Remember to keep the strip always under the Drill, or it will be difficult to pick up the Drill.

Forward/Reverse Button

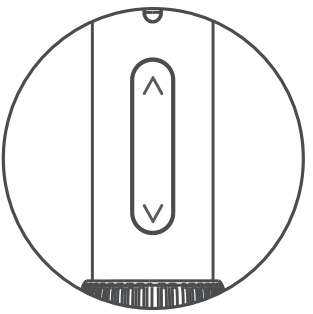

- Press the Forward Button to drill. Press the Reverse Button to
- remove the drill bit and prevent it from getting stuck.
- Double click the Forward/Reverse button to automatically rotate. Click the button again to stop automatic rotation.

On/Off Knob

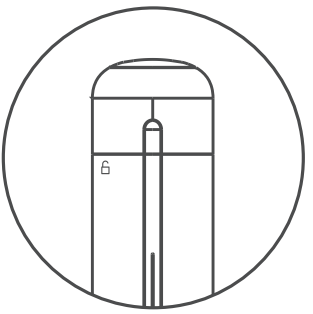

- Drill bits are stored in the magnetic holders in the storage. After use, place the drill bit back into the magnetic holder, and it will be held in place by magnet.

Direction Indicator(Light Bar)

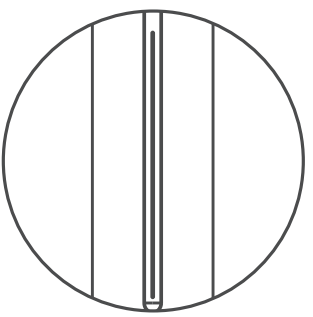

- Pick up the strip firstly and then the Drill will lift with it, then you
- can pick up the Drill. Remember to keep the strip always under the Drill, or it will be difficult to pick up the Drill.

High/Low Speed Switch Knob

- Rotate the speed switch knob to switch between high and low speed settings.
- Low speed mode: 250±10%RPM. The low speed mode is suitable for high hardness materials and high torque applications, such as resin, composite clay model drilling, pearl, PCB drilling, etc.
- High speed mode: 1300±10%RPM. The high speed mode is suitable for general hardness materials and low torque applications, such as small woodworking projects, plastic/soft metal model drilling, soft stone, etc.



LED light

- When the Forward/Reverse button is pressed, the Drill starts
- rotating/automatically rotating, the LED light turns on simultaneously.



- The LED light will stay on for 10 seconds without any further operation.

Battery Charging

- The drill is equipped with a universal Type-C charging port and includes a USB charging cable. A charger is not included.
  Please use a 5V charger for charging. The drill
- supports a maximum charging input of 5W(5V/1A).

Charging Indicator Status

- If the battery level is below 20% during use, the indicator will flash red rapidly for 5 seconds before turning off. Please recharge the battery promptly
- During charging, the indicator will flash green slowly.
- When the battery is fully charged, the indicator will remain solid green.

Drill Bit Installation

- Remove a drill bit from the Storage, then Loosen the Quick-Install Drill Chuck and insert the drill bit into the chuck, and finally tighten the chuck.

- Notice: The drill bit is sharp. Be sure to remove the drill bit and put it back into the storage after using to avoid injury.

5. Specifications

Product Name	Electric Precision Drill Kit
Product Model	NEX K2 Nano
Product Dimension	204 x 76 x 40 mm
Net Weight	378g
Electric Precision Drill Dimension	187×Φ24 mm
Low Speed Mode	0.6Nm Max. / 250±10% RPM
High Speed Mode	0.15Nm Max. / 1300±10% RPM
Max. manual torque	3 N·m
Battery Capacity	800mAh
Rated Voltage	3.7V
Charging Input	5V/1A
Input Port	USB Type-C
Charging Time	＜180 min
Drill bit Shank Size	3.2mm

Drill bit Length	35mm
Drill bit Material	HSS
Drill bits diameter (unit:mm)	0.6*3/0.7*3/0.8*2/1.0/1.2/1.4/1.6/ 1.8/2.0/2.2/2.4/2.6/2.8/3.0/3.2

WARRANTY CARD

Your Warranty Includes

- Your product is covered for 12 months against manufacturing defects.

How to Return Your Fanttik Product

- Email us at support@fanttik.com with your order number.
- We'll email you a prepaid return shipping label.
- Tear off the 'Return Details' page, fill it out, and include it inside your return package.
- Use the provided label to ship your package back to us.
- Once shipped, please email us. We'll expedite your replacement or solution.

support@fanttik.com

Return Details

Complete this section and include it in your package for faster processing

Purchase Name:	
Order Number:	
Date of Purchase:	
Place of Purchase:	

929-693-6066MON-FRI 9AM-5PM (ET)
www.fanttik.com
support@fanttik.com
METASEE LLC
12 GREENWAY PLZ STE 1161A HOUSTON,
TX 77046-1203
Made in China