Fanttik

NEX E1 Ultra Electric Precision Screwdriver Kit

User Manual



Please read this instruction manual carefully
before use and keep it for future reference.

Contents

1.Safety Warnings ---------- 02

2.Product Overview ---------- 03

3.Storage ---------- 04

4.How to Use ---------- 06

5.Specifications ---------- 09

1.Safety Warnings

- Avoid moisture, dust, and drop.
- Do not store the product in extreme temperature environment.
- Stay alert, watch what you are doing and use common sense when operating. Do not operate while you are tired or under the influence of drugs, alcohol or medication.
- This product is not a toy and should not be used by kids under 10 years old.
- This product has built-in battery, do not throw it into fire and should be recycled by local laws and regulations.
- Do not dismantle the machine by yourself. Have your power tool serviced by a qualified repair person or contact us for advice.

2.Product Overview

1.Type-C charging port
2.Torque Knob
3.Charging Indicator
4.Forward/Reverse rotation button
5.LED Lights
6.Bit Holder

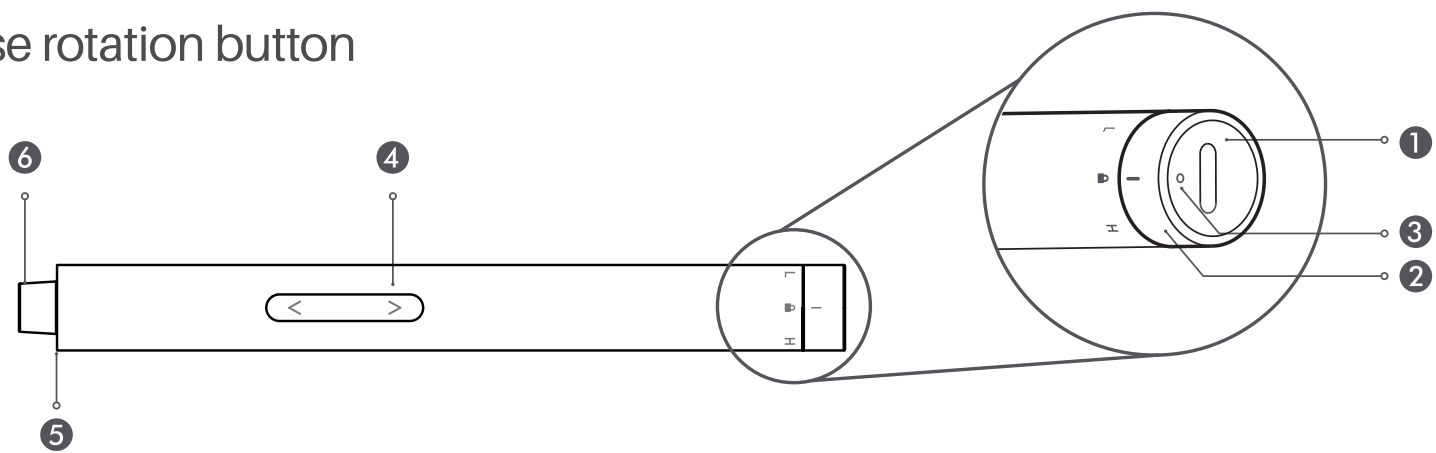

3.Storage

1.Aluminum Housing
2.Rotatable Storage
3.Screwdriver Bit
4.Screwdriver

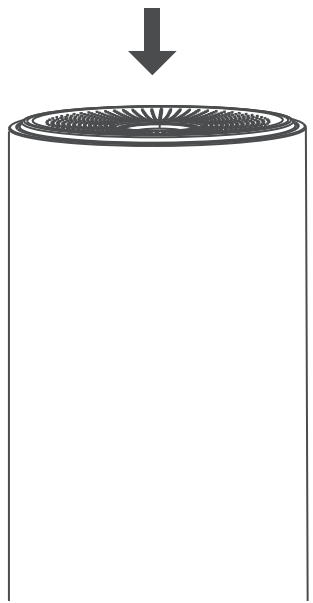

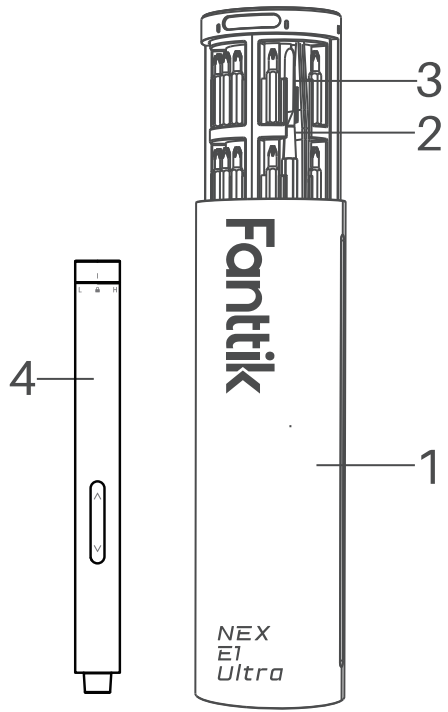

How to open/close the rotatable storage

- Press down on the top of the rotatable storage (avoiding the screwdriver), both rotatable storage and screwdriver will pop up.
- Press the rotatable storage again to close it, then press down on the screwdriver to complete the storage.

Storage of Screwdriver Bit

- Bits are stored in the magnetic holders around the rotatable storage. A tweezer and a pry bar are included. After use, place the bit back into the magnetic holder, and it will be held in place by magnet.

Storage of Screwdriver

- Screwdriver is stored in the center of the rotatable storage and is held in place by magnet.

4.How to Use

Forward/Reverse rotation button

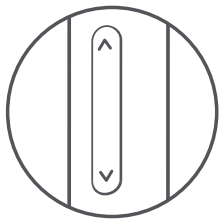

- Press the Forward/Reverse Rotation button to tighten or loosen a screw.

Bit Selection



- Rotate the Rotatable Storage to find the bit you need.

Torque knob

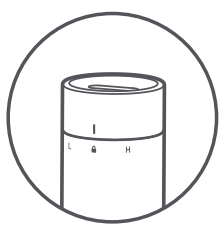

- When the torque knob is set to level 🔒 , the device is turned off and is also in manual mode.
- When the torque knob is set to level L , it is in low torque mode.

- When the torque knob is set to level H , it is in high torque mode

LED light

- When press the forward/reverse rotation button, the LED light turns on simultaneously.
- The LED light will stay on for 10 seconds without any further operation.



Charging Indicator Status

- If the battery level is below 20% during use, the indicator will flash red quickly for 5 seconds then turn off. Please charge the battery in time.

- When charging, the indicator will slowly flash red.
- When the battery is fully charged, the indicator will stay solid white.

Magnetizer

- Place the bit tip in the magnetizing window for several seconds to complete magnetization.

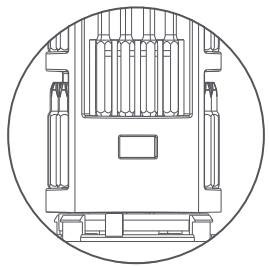

Bit Installation

- Remove a screwdriver bit from the Rotatable Storage, then insert it into the screwdriver bit holder.

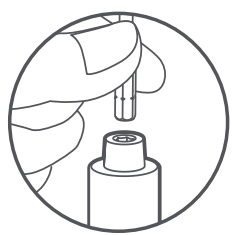

5.Specifications

Product Name	Electric Precision Screwdriver Kit
Product Model	NEX E1 Ultra
Product Dimension	192 x ø57 mm
Net Weight	510 g
Screwdriver Dimension	159×Φ16.4 mm
Max. Torque of level L	0.05 N·m
Max. Torque of level H	0.2 N·m
Max. manual torque	3 N·m
Rotation Speed (unloaded)	200 RPM
Battery Capacity	350mAh
Rated Voltage	3.7V
Charging Input	5V/0.14A
Charging Time	160-200 min

Bit specifications

Bit Shank Size: 5/32inch(4mm)

Bit Length: 1.1 inch(28mm) / 1.8 inch(45mm)

Bit Material: S2 Steel


PH0000, PH000, PH00, PH0, PH1, PH2


SL1.0, SL1.5, SL2.0, SL2.5, SL3.0, SL3.5


H0.7, H0.8, H0.9, H1.0, H1.3, H1.5, H2.0, H2.5, H3.0


T2, T3, T4


TR5, TR6, TR7, TR8, TR9, TR10, TR15


Y0.6, Y1.0, Y2.0, Y2.5, Y3.0, Y1


S0, S1


P2, P5, P6


2.0, 2.3, 2.5


U2.0, U2.6, U3.0


W1.5


Sim Ejector: 0.8

Tweezers x 1

Spudger x 1

929-693-6066 MON-FRI 9AM-5PM (ET)
www.fanttik.com
support@fanttik.com
METASEE LLC
12 GREENWAY PLZ STE 1161A HOUSTON,
TX 77046-1203

RoHS
Made in China