Fanttik

C11 Ultra

Electric Scissors

User Manual



Please read this instruction manual carefully before use and keep it for future reference.

Contents

1. Safety Warning 01
2. Package Contents 07
3. Product Overview 08
4. Operation and Functions 09
5. Specifications 14
6. Troubleshooting 15
7. FCC Statement 16
8. Warranty Info 17

1. Safety Warning

WARNING Read all safety warnings, instructions, illustrations and specifications provided with this power tool. Failure to follow all instructions listed below may result in electric shock, fire and/or serious injury. **Save all warnings and instructions for future reference.**

1. Work area safety

a) Keep work area clean and well lit. Cluttered or dark areas invite accidents.
b) Do not operate power tools in explosive atmospheres, such as in the presence of flammable liquids, gases or dust. Power tools create sparks which may ignite the dust or fumes.
c) Keep children and bystanders away while operating a power tool. Distractions can cause you to lose control.

2. Electrical safety

a) Do not expose power tools to rain or wet conditions. Water entering a power tool will increase the risk of electric shock.
b) Hold the power tool by insulated gripping surfaces, when performing an operation where the fastener may contact hidden wiring or its own cord. Fasteners contacting a "live" wire may make exposed metal parts of the power tool "live" and could give the operator an electric shock.

3. Personal safety

a) Stay alert, watch what you are doing and use common sense when operating a power tool. Do not use a power tool while you are tired or under the influence of drugs, alcohol or medication. A moment of inattention while operating power tools may result in serious personal injury.

b) Use personal protective equipment. Always wear eye protection. Protective equipment such as a dust mask, non-skid safety shoes, hard hat or hearing protection used for appropriate conditions will reduce personal injuries.

c) Prevent unintentional starting. Ensure the switch is in the off-position before connecting to power source and/or battery pack, picking up or carrying the tool.Carrying power tools with your finger on the switch or energising power tools that have the switch on invites accidents.

d) Remove any adjusting key or wrench before turning the power tool on. A wrench or a key left attached to a rotating part of the power tool may result in personal injury.

e) Do not overreach. Keep proper footing and balance at all times. This enables better control of the power tool in unexpected situations.

f) Dress properly. Do not wear loose clothing or jewellery. Keep your hair and clothing away from moving parts. Loose clothes, jewellery or long hair can be caught in moving parts.

g) If devices are provided for the connection of dust extraction and collection facilities, ensure these are connected and properly used. Use of dust collection can reduce dust-related hazards.
h) Do not let familiarity gained from frequent use of tools allow you to become complacent and ignore tool safety principles. A careless action can cause severe injury within a fraction of a second.

4. Power tool use and care

a) Do not force the power tool. Use the correct power tool for your application. The correct power tool will do the job better and safer at the rate for which it was designed.
b) Do not use the power tool if the switch does not turn it on and off. Any power tool that cannot be controlled with the switch is dangerous and must be repaired.
c) Disconnect the plug from the power source and/or remove the battery pack, if detachable, from the power tool before making any adjustments, changing accessories, or storing power tools. Such preventive safety measures reduce the risk of starting the power tool accidentally.
d) Store idle power tools out of the reach of children and do not allow persons unfamiliar with the power tool or these instructions to operate the power tool. Power tools are dangerous in the hands of untrained users.

e) Maintain power tools and accessories. Check for misalignment or binding of moving parts, breakage of parts and any other condition that may affect the power tool's operation. If damaged, have the power tool repaired before use. Many accidents are caused by poorly maintained power tools.
f) Keep cutting tools sharp and clean. Properly maintained cutting tools with sharp cutting edges are less likely to bind and are easier to control.
g) Use the power tool, accessories and tool bits etc. in accordance with these instructions, taking into account the working conditions and the work to be performed. Use of the power tool for operations different from those intended could result in a hazardous situation.
h) Keep handles and grasping surfaces dry, clean and free from oil and grease. Slippery handles and grasping surfaces do not allow for safe handling and control of the tool in unexpected situations.

5. Battery tool use and care

a) Recharge only with the charger specified by the manufacturer. A charger that is suitable for one type of battery pack may create a risk of fire when used with another battery pack.
b) Use power tools only with specifically designated battery packs. Use of any other battery packs may create a risk of injury and fire.
c) When battery pack is not in use, keep it away from other metal objects, like

paper clips, coins, keys, nails, screws or other small metal objects, that can make a connection from one terminal to another. Shorting the battery terminals together may cause burns or a fire.

d) Under abusive conditions, liquid may be ejected from the battery; avoid contact. If contact accidentally occurs, flush with water. If liquid contacts eyes, additionally seek medical help. Liquid ejected from the battery may cause irritation or burns.

e) Do not use a battery pack or tool that is damaged or modified. Damaged or modified batteries may exhibit unpredictable behaviour resulting in fire, explosion or risk of injury.

f) Do not expose a battery pack or tool to fire or excessive temperature. Exposure to fire or temperature above 265 °F may cause explosion.

g) Follow all charging instructions and do not charge the battery pack or tool outside the temperature range specified in the instructions. Charging improperly or at temperatures outside the specified range may damage the battery and increase the risk of fire.

6. Service

a) Have your power tool serviced by a qualified repair person using only identical replacement parts. This will ensure that the safety of the power tool is maintained.

b) Never service damaged battery packs. Service of battery packs should only be performed by the manufacturer or authorized service providers.

2. Package Contents

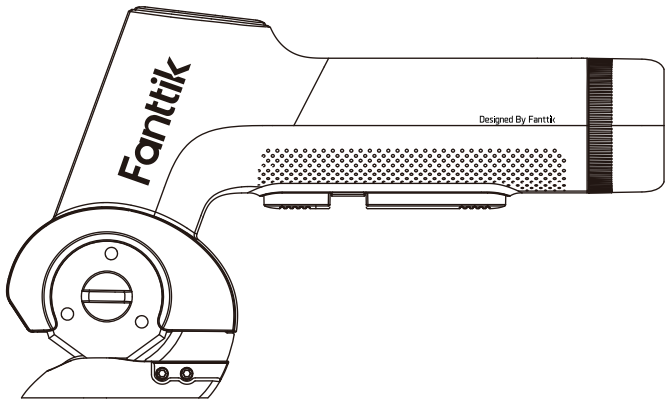

Electric Scissors * 1

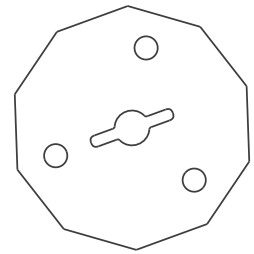

Replacement Blade * 1

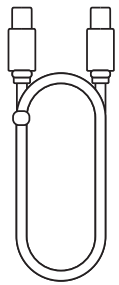

Charging Cable * 1

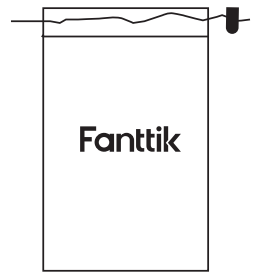

Storage Bag * 1

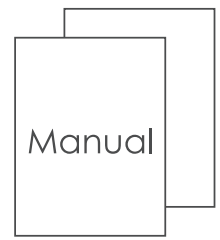

User Manual * 1

3. Product Overview

1. Display Screen
2. LED Light
3. Blade
4. Support Frame
5. Blade Quick-Release Knob
6. Safety Button
7. On/Off Switch
8. Mode Switch
9. Type-C Charging Port

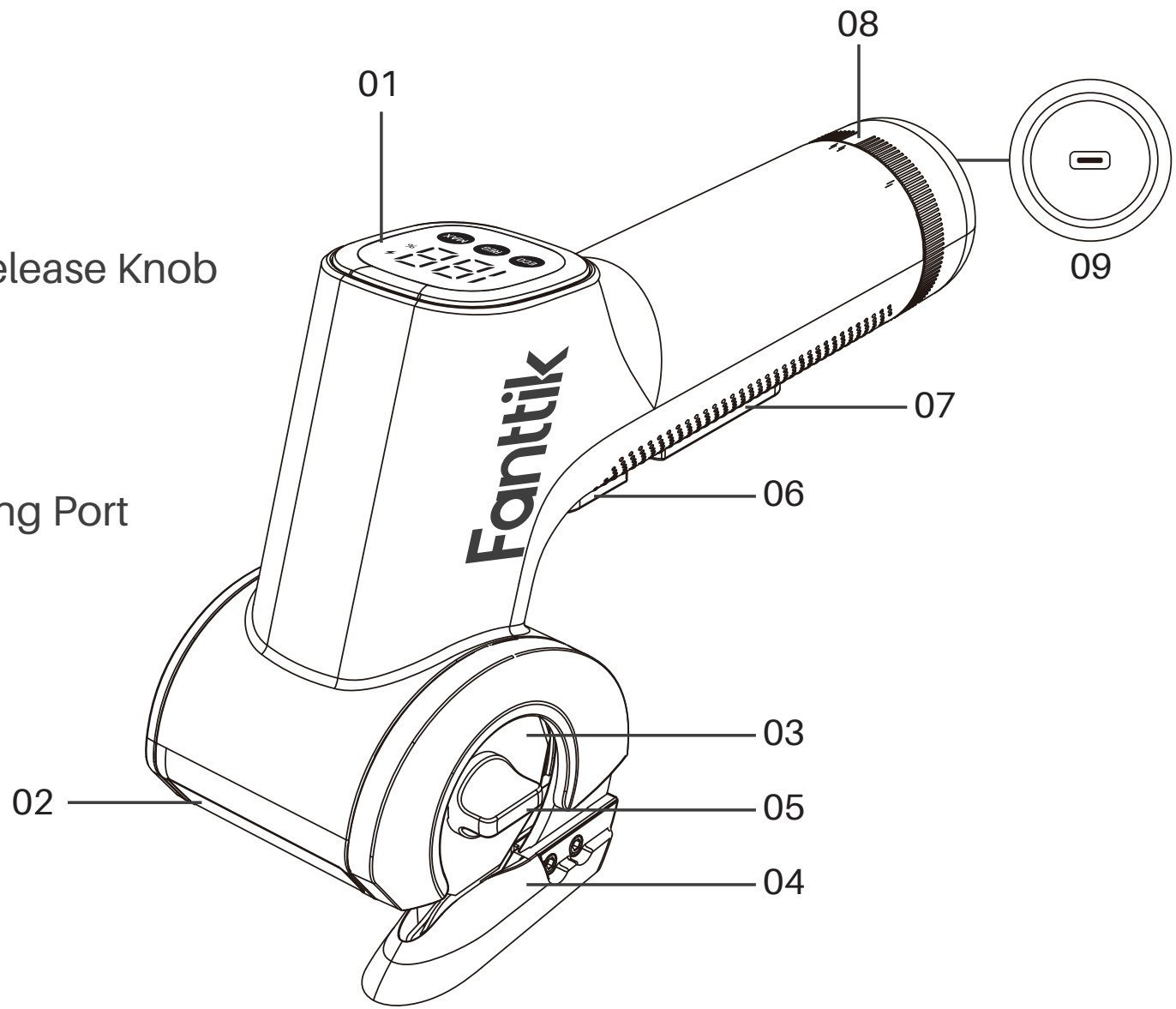

4. Operation and Functions

Intended Use

The tool is intended for cutting flexible, soft materials of up to 10 mm in thickness, such as carpet, PVC, cardboard, leather,fabrics and similar materials.

1. On/Off Switch

- Your switch is locked off to prevent accidental starting. Depress lock off button then on/off switch and release safety button.
- Your tool is now on. To switch off just release the on/off switch.

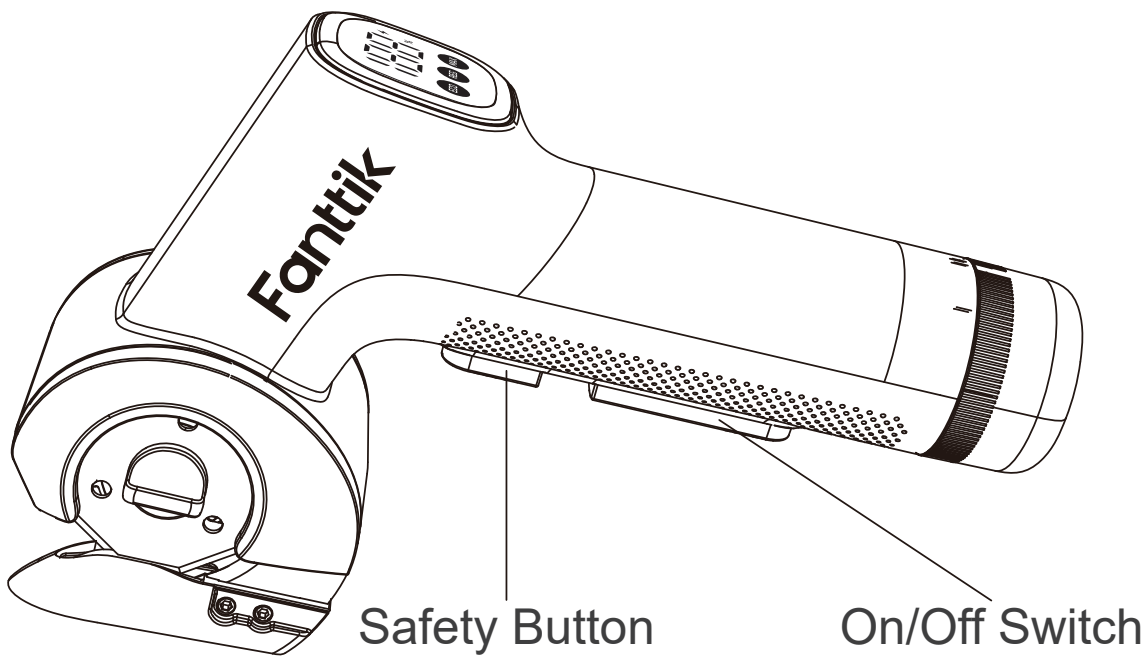

2. Charging the Tool

- The device is equipped with a universal Type-C charging port and comes with a Type-C charging cable. A charger is not included. Please use a 5V charger for charging.
- When the battery is empty, the machine is switched off by means of a protective circuit: the blade will no longer move.
- In a warm environment or after heavy use, the battery pack may become too hot to permit charging. Allow time for the battery to cool down before recharging.

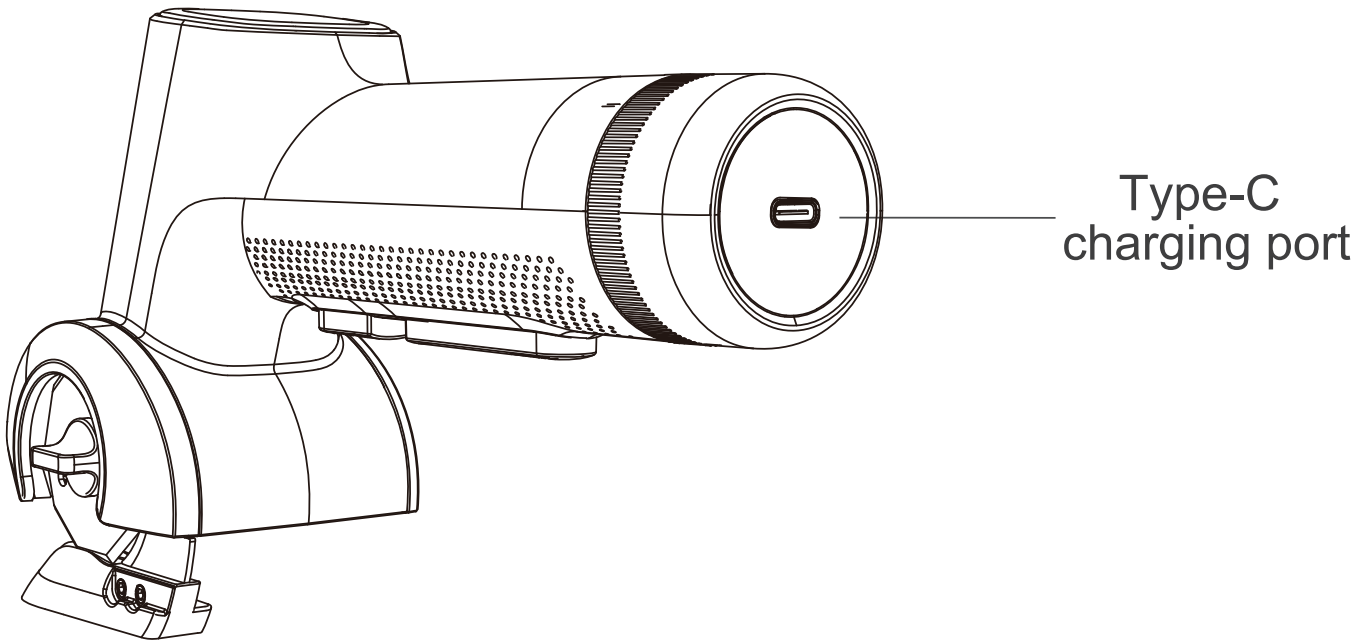

3. Mode Adjustment

- The machine is equipped with three different gears (ECO, REG and MAX), and the speed of each gear is different. You can switch gears by rotating the knob at the tail of the handle.

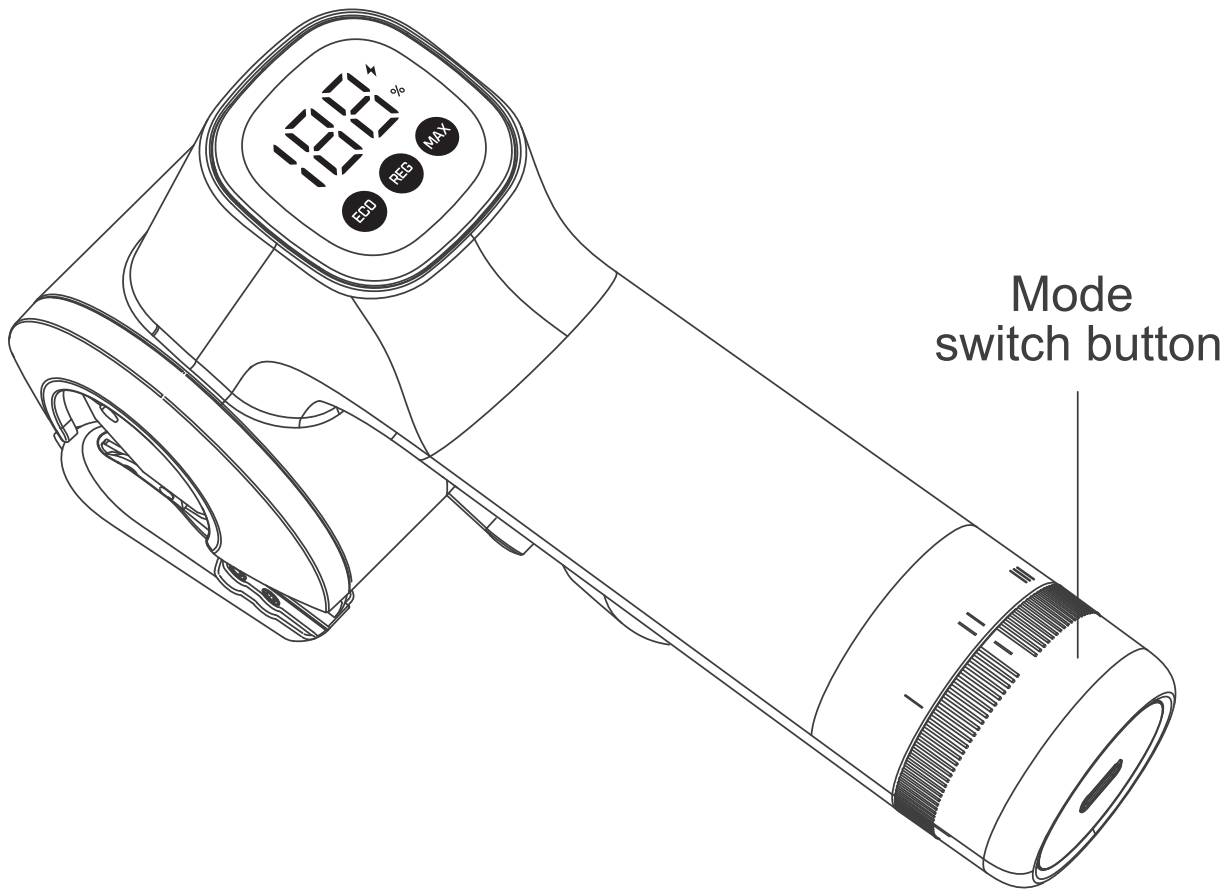

4. Cutting Mode

- Thin materials such as fabrics may be drawn into the tool and get wedged during cutting. To obtain good cutting results, do not apply excessive pressure on these materials. Hold fabrics under sufficient tension and cut slowly.
- **WARNING!** Do not allow the support frame to become wedged during cutting.

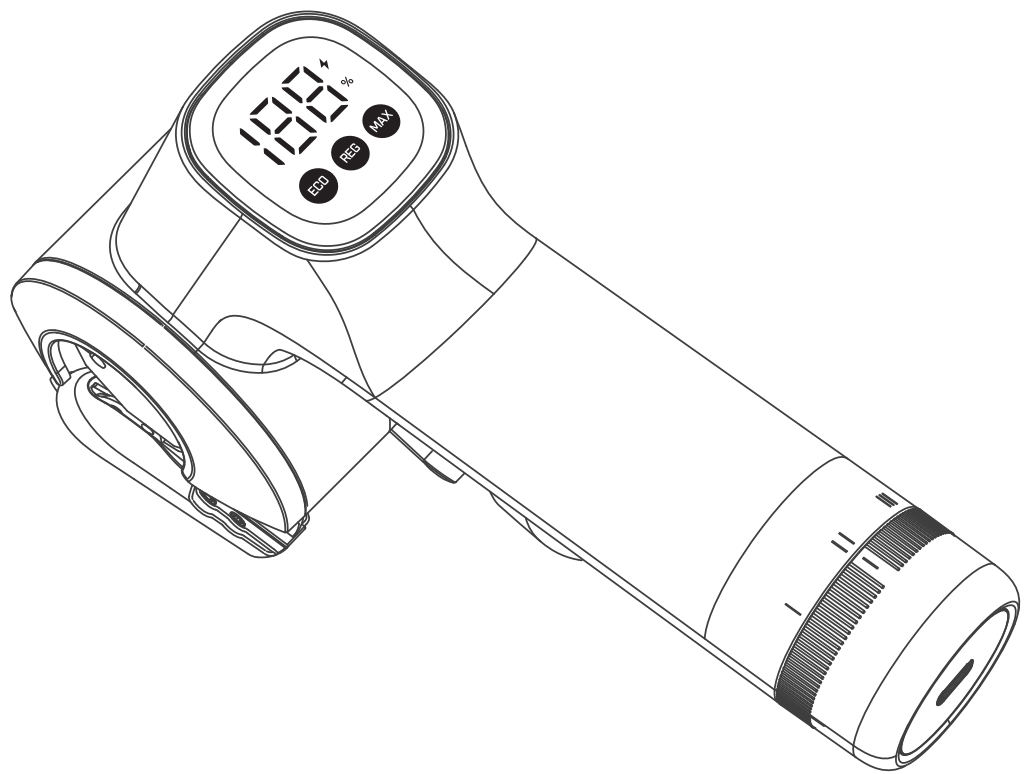

5. Blade Replacing

- Rotate the blade quick-release knob counterclockwise to loosen and remove it, then take the old blade off the flange and mount the new blade onto the assembly.
- When installing the new blade, double-check that the two positioning studs fully stick out through the blade holes. Put the quick release knob back on and tighten it completely to secure the blade.

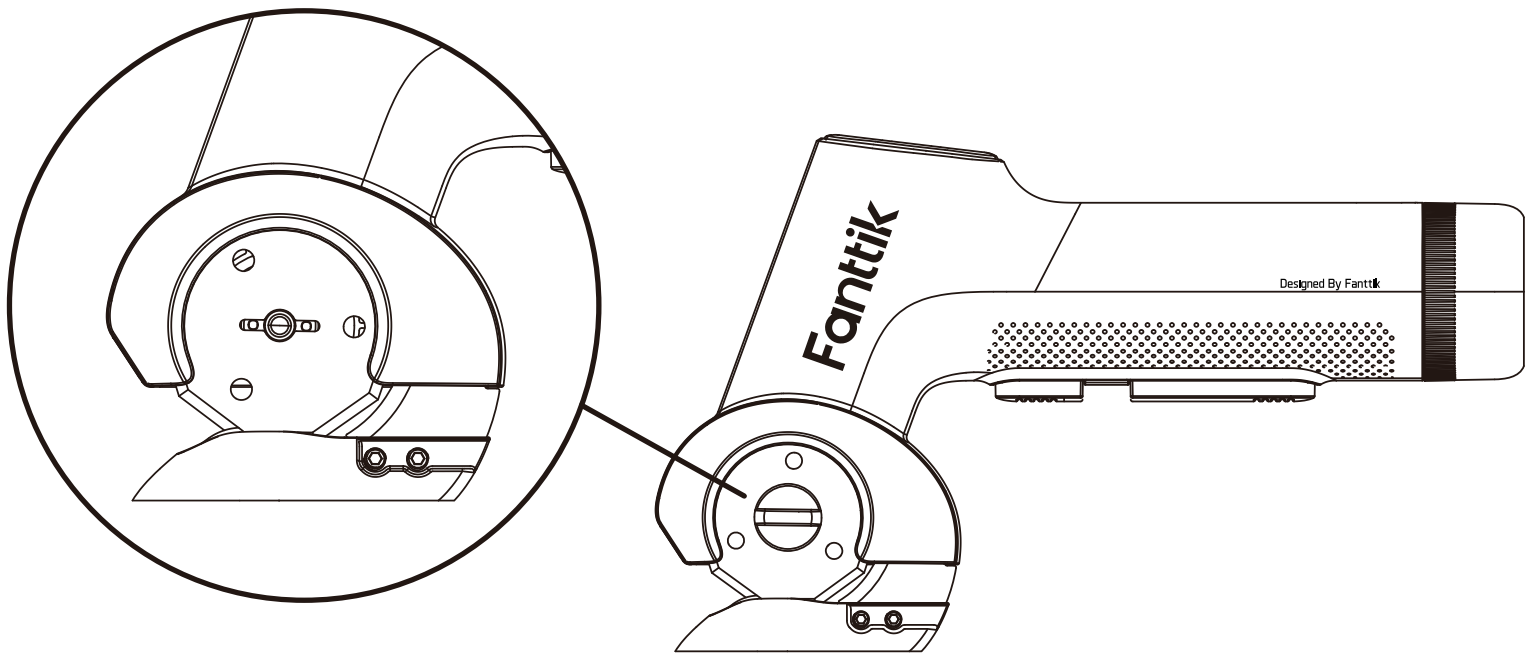

Blade Quick-Release Knob

5. Specifications

Product Name	Electric Scissors
Product Model	C11 Ultra
Product Dimension	21.4cm*12.7cm*6.7cm
Net Weight	622 ± 3% g
Cutting Depth	10mm[≈3/8inch]
No load speed	350/500/600 ± 10%RPM
Rated Voltage	7.4V
Charging Input	5V ⎓ 2A

6. Troubleshooting

Trouble	Cause	Solution
Tool does not operate	Battery depleted	Charge the tool
	Short-circuit protection triggered	Stop operation; the tool will automatically resume after 1 second
	Over-current protection triggered	Stop operation; the tool will automatically resume after 1 second
	Battery over-temperature protection triggered	Allow the battery to cool down before use
	Foreign material jam	Clear foreign materials
Unusual operating noise	Blade friction	Check blades for wear
	Incorrect blade installation	Remove and reinstall the blades(ensure the two protruding metal pins pass through the blade holes)
Misalignment of moving and fixed blades	Cutting hard materials	Reinstall the blades
	Loose blade locking screw	Tighten the blade locking screw
Poor cutting performance	Worn blades	Replace with new blades
Unable to charge	Loose Type-C cable connection	Check the charging cable connection
	Incompatible, faulty or under-rated charger	Replace with a compatible charger

7. FCC Statement

This device complies with part 15 of the FCC Rules. Operation is subject to the following two conditions: (1) This device may not cause harmful interference, and (2) this device must accept any interference received, including interference that may cause undesired operation.

NOTE: This equipment has been tested and found to comply with the limits for a Class B digital device, pursuant to part 15 of the FCC Rules. These limits are designed to provide reasonable protection against harmful interference in a residential installation. This equipment generates, uses and can radiate radio frequency energy and, if not installed and used in accordance with the instructions, may cause harmful interference to radio communications. However, there is no guarantee that interference will not occur in a particular installation. If this equipment does cause harmful interference to radio or television reception, which can be determined by turning the equipment off and on, the user is encouraged to try to correct the interference by one or more of the following measures:

--Reorient or relocate the receiving antenna.

--Increase the separation between the equipment and receiver.

--Connect the equipment into an outlet on a circuit different from that to which the receiver is connected.

--Consult the dealer or an experienced radio/TV technician for help.

MODIFICATION: Any changes or modifications not expressly approved by the grantee of this device could void the user's authority to operate the device.

8. Warranty Info

WARRANTY

- This product is covered by a **12-month** warranty for manufacturing defects.

EC REP

Lienco SAS
8 RUE MARCEL CERDAN,BUSSY SAINT GEORGES,77600.France
Email: contact@lienco.eu
Phone/Fax: +33766929910

UK REP

CET Product Service Ltd.
Beacon House Stokenchurch Business Park, Ibstone Rd, Stokenchurch High Wycombe HP14 3FE UK
Email: info@cetproduct.com
Phone/Fax: +44 7419325266







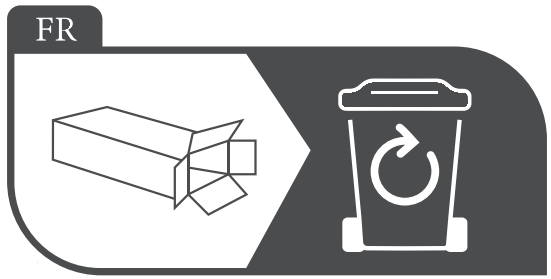

points de collecte sur www.quefairedemesdechets.fr
privilégiez la réparation ou le don de votre appareil !

[Service hotline available in the U.S. and Canada only]
929-693-6066 MON-FRI 9AM-5PM[PT]
www.fanttik.com
support@fanttik.com
Manufacturer/Hersteller: METASEE LLC
Address/Adresse: 12 GREENWAY PLZ STE 1161A
HOUSTON, TX 77046-1203

Made in China

CAN ICES(B)/NMB(B)





