What's in the Box

At a Glance

Before Mounting

1. Download the eufy App
2. Fully Charge the Camera Before Using
3. Add HomeBase Mini (Optional)
4. Add the Camera
5. Expand the Storage (Optional)

Mounting the Camera

1. Choose a Location
2. Install the Mounting Bracket
3. Select a Mounting Option
4. Adjust the Camera Field of View

Find Out More

Detach the Mounting Bracket
Set Night Vision Modes
Compatible Devices
Other Information

What's in the Box

For Camera Installation


Camera


or
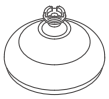
Magnetic Mounting Bracket*

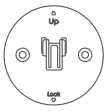

Mounting Base

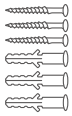
Screw Pack

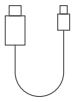
0.6m Type-C Cable

For HomeBase Setup (Only available in 2-Cam / 4-Cam Kit)


HomeBase Mini


5V/2A Power Adapter

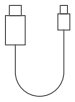
2m Power Cable

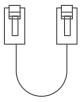
1.2m Internet Cable

For Solar Panel Installation (Only available in kits with solar panel)


Solar Panel


Solar Panel Mounting Bracket


Screw Pack

Other

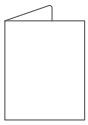
Quick Start Guide



Warning Sticker

* The mounting bracket included may vary. You may receive either of the 2 mounting brackets shown above.

Items	Add-on Camera	Cam with Solar Panel	2-Cam kit	2-Cam kit with Solar Panel	3-Cam kit	4-Cam kit	4-Cam kit with Solar Panel
Camera	1	1	2	2	3	4	4
HomeBase Mini	0	0	1	1	1	1	1
Solar Panel	0	1	0	2	0	0	4
Magnetic Mounting Bracket	1	1	2	2	3	4	4
Mounting Base	1	1	2	2	3	4	4
Solar Panel Mounting Bracket	0	1	0	2	0	0	4
Screw Pack	1	2	2	4	3	4	8

Tools You will Need


Phillips Screwdriver

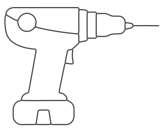
Power Drill (6 mm)


Hammer

At a Glance

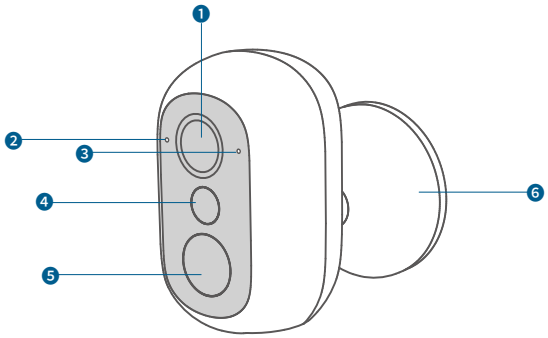

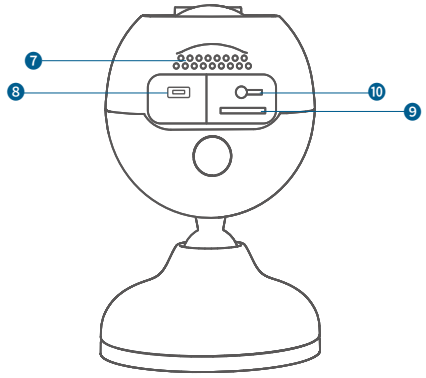

1. Camera Lens
2. LED Indicator
3. Microphone
4. Spotlight
5. PIR Sensor
6. Magnetic Mounting Bracket
7. Speaker
8. USB-C Port
9. microSD Card Slot
10. Sync Button
    Press for 2 seconds to reset the Wi-Fi connection.

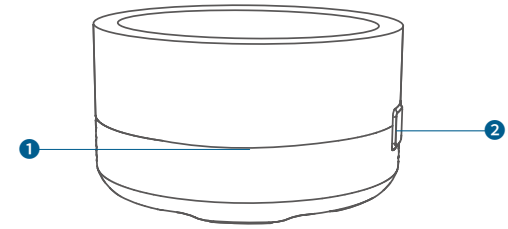

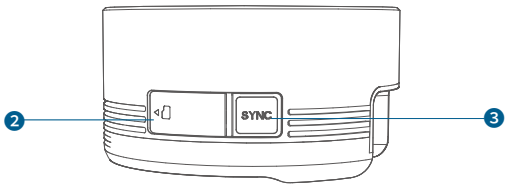

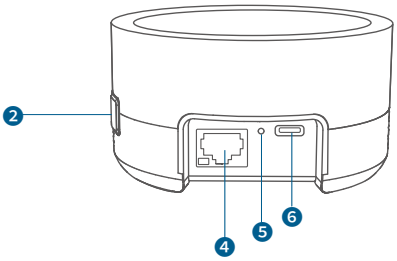

1. LED Indicator
2. microSD Card Slot
3. SYNC Button
4. Ethernet Port
5. Reset Hole
    To reset the HomeBase, insert a straightened paperclip into this hole holding for 8 seconds until you hear a beep.
6. USB-C Port

Before Mounting

1. Download the eufy App

① Download the latest version of eufy app.

② Log in or create a new account.



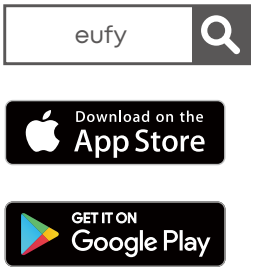

2. Fully Charge the Camera Before Using

You can check the battery level in the app.

Charge the camera with the provided Type-C cable until the blue light turns off (about 4 hours with a 5V/2A power adapter).

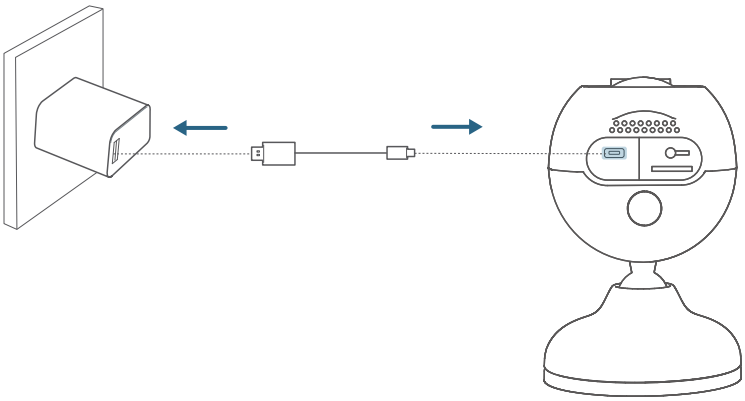

3. Add HomeBase Mini (Optional)

① Power the HomeBase Mini with the included 5V/2A power adapter and then connect it to your router. Wait about one minute for the blue light to blink slowly.

To ensure proper operation, use only the included original power adapter. If a non-original adapter must be used, it must be rated at 5V/2A or higher to avoid insufficient power supply.

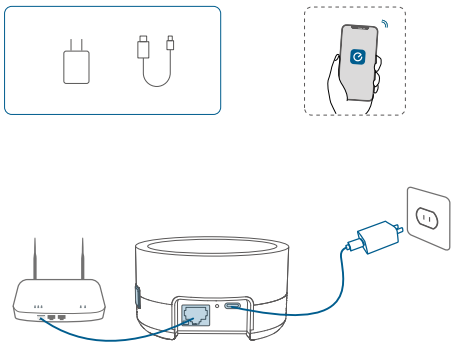

② Open the eufy app, scan the QR code on the HomeBase Mini. Then follow the in-app instructions to add the device.

During this process, ensure the network is stable and the HomeBase is powered on. A solid blue light indicates a successful binding.

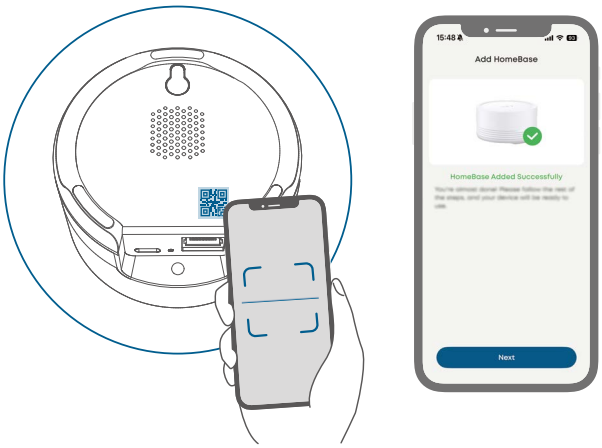

LED Indicator	Description
Red Light Blinks Slowly	Powered on, not connected to network
Solid Blue light	Connected to the network successfully
Blue Light Blinks Slowly	Connected to the network successfully but has not been setup
Solid Blue light	Successfully bound
Solid Red light	HomeBase Mini offline / network disconnected

4. Add the Camera

Open the eufy app, scan the QR code on the camera. Then follow the in-app instructions to add the device.

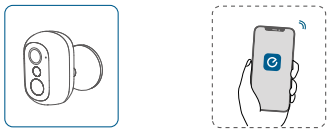

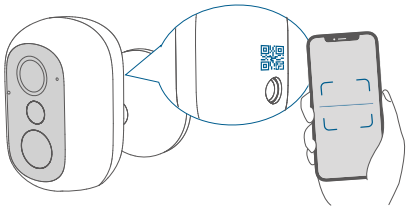

Option 1: Connect to your Router (Without HomeBase Mini)

The device only supports 2.4GHz Wi-Fi networks.

① Tap **Connect to Router** and then follow the in-app instructions.

Option 2: Connect to HomeBase Mini

Some features, e.g., local bionic self-learning facial recognition, storage management, and cross-camera tacking, require your eufyCam to be connected to the HomeBase.

① Tap **Connect to HomeBase.**

② Press and hold the camera's SYNC button for about 2 seconds until the blue light blinks slowly with a beep. Then follow the in-app instructions to complete pairing.



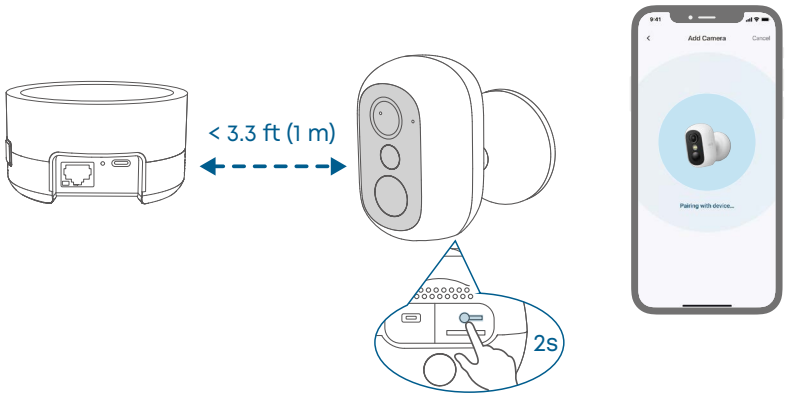

5. Expand the Storage (Optional)

5.1 Insert the microSD Card

Once inserted, the microSD card will serve as the primary storage medium, prioritizing the storage of system-generated data (such as logs and configuration files) and video recordings from the cameras.

Insert the microSD card with its pins facing up. Press the card into the slot until it clicks into position.
• Without HomeBase Mini: Insert the microSD card (up to 256GB) into the camera.

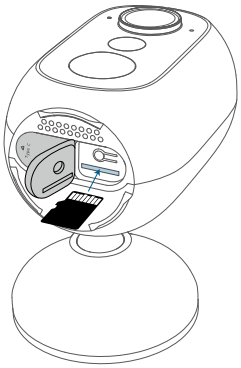

• With HomeBase Mini: Insert the microSD card (up to 1TB) into HomeBase

Do not insert or remove the microSD card when HomeBase Mini is powered on.

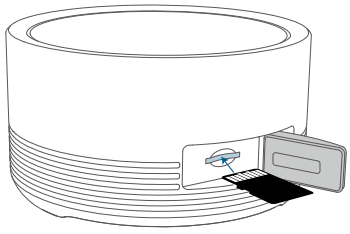

5.2 Remove the microSD Card

To remove the microSD card, press it inward until it springs loose, then pull it out from the slot.

Mounting the Camera

1. Choose a Location

Recommended Location:
- Height of less than 2 m (7 ft)
- 7 m (23 ft) field of view
- Strong Wi-Fi signal

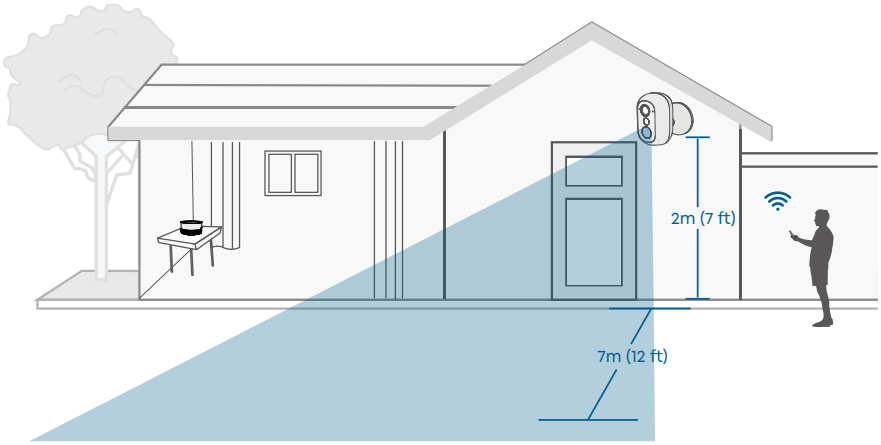

2. Install the Mounting Bracket

View the How-to Video

① Slide down the mounting base to detach it from the magnetic mounting bracket.

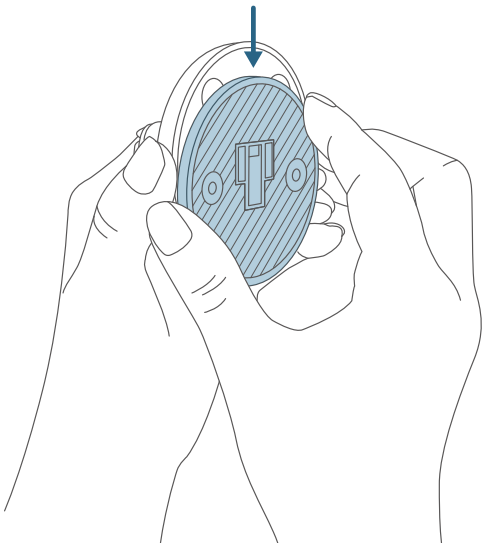

② Adjust the ball joint to the illustrated angle, then align the bracket with the hole on the back of the camera for installation (**a**). Or screw the bracket into the camera (**b**).

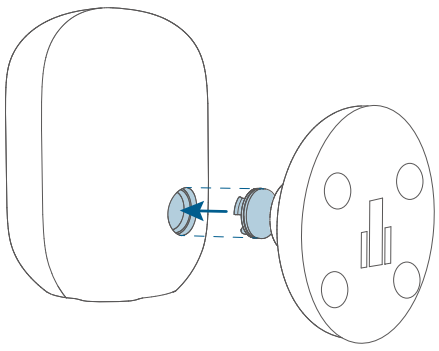

a

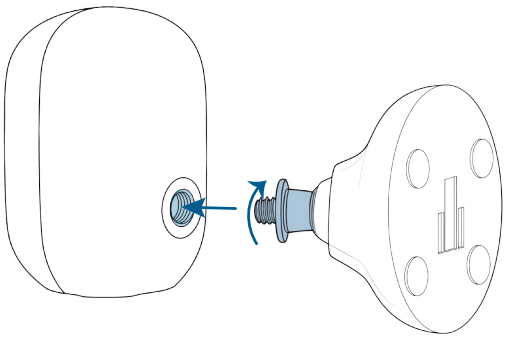

b

3. Select a Mounting Option

Always position the camera upright to prevent water intrusion.

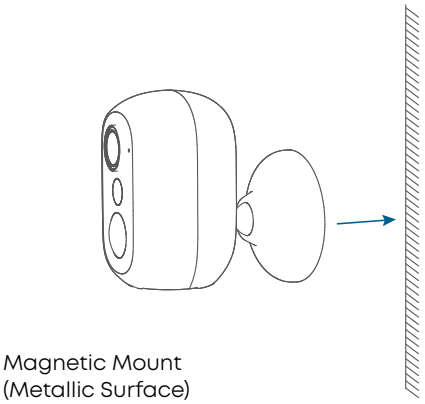

Magnetic Mount
(Metallic Surface)

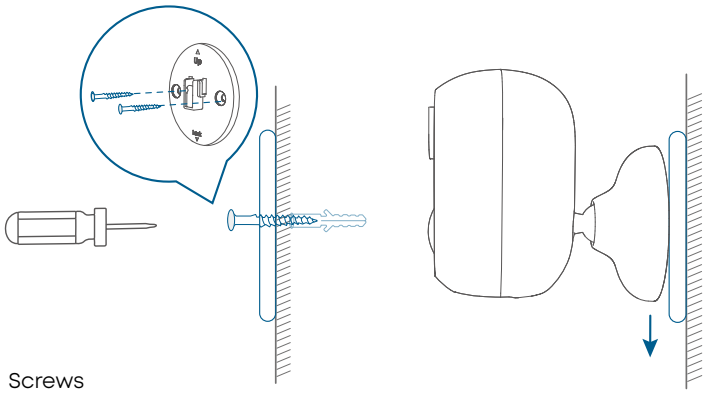

Screws

3.1 Install the Camera with Magnetic Mount (Metallic Surface)

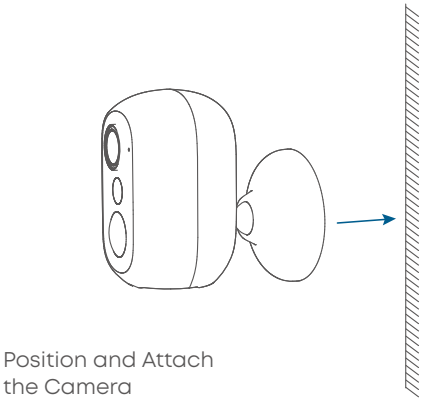

Position and Attach
the Camera

3.2 Install the Camera with Screws

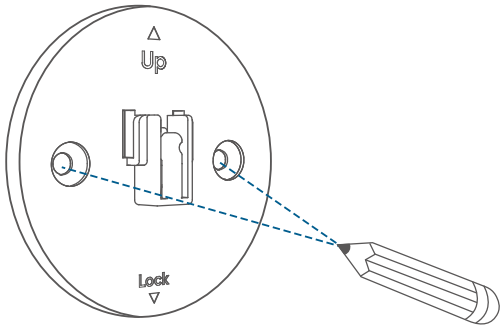

① Position

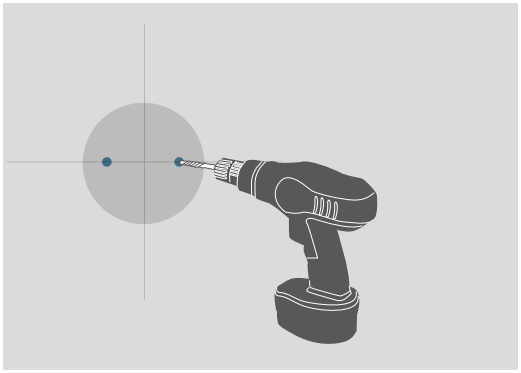

② Drill Holes

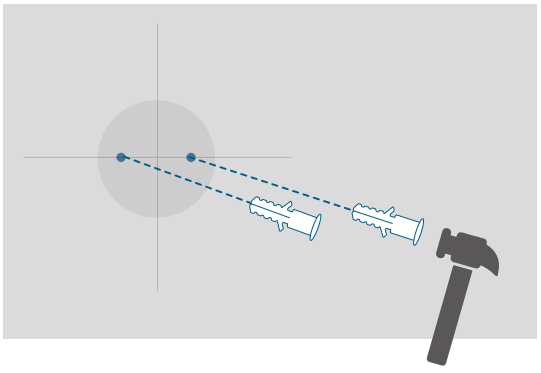

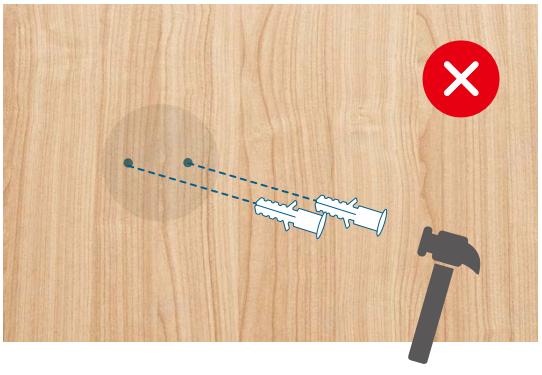

③ Insert Anchors (Skip for Wooden Walls)

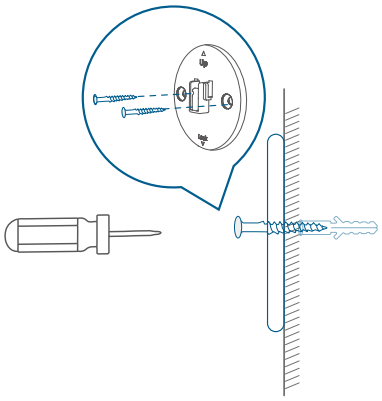

④ Install the Mounting Base

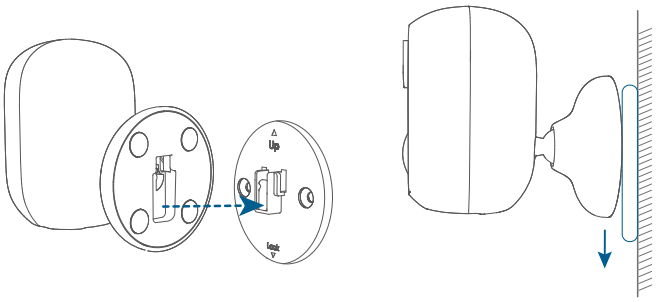

⑤ Slide the Camera onto the Mounting Base

4. Adjust the Camera Field of View

① Remove Protective Film

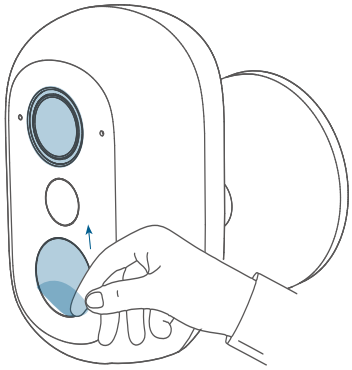

② Rotate to Get the Optimal Angle

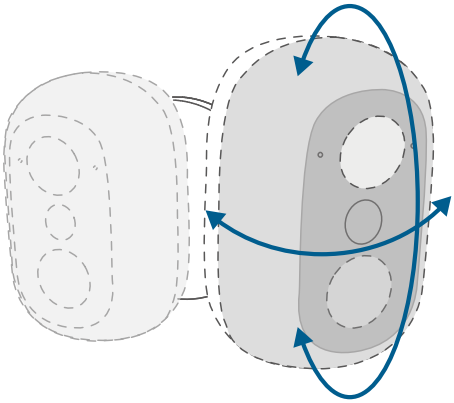



Congratulations!



Now you're all set to use your eufyCam C35!
Please explore more in the eufy app.

Find Out More

Detach the Mounting Bracket

For the screw-in design, simply unscrew the bracket from the camera.

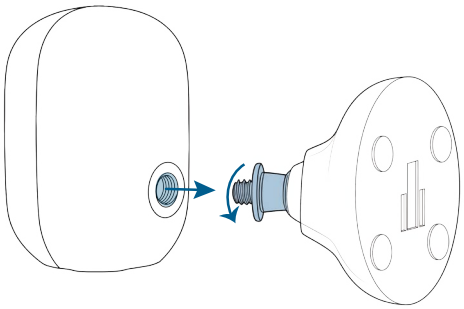

For the snap-fit design:

1. Adjust the bracket to the illustrated angle.

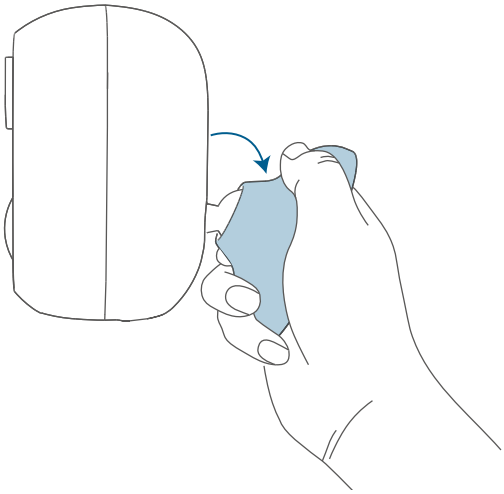

2. Hold the bracket firmly and bend it outward and downward to detach the camera and bracket.

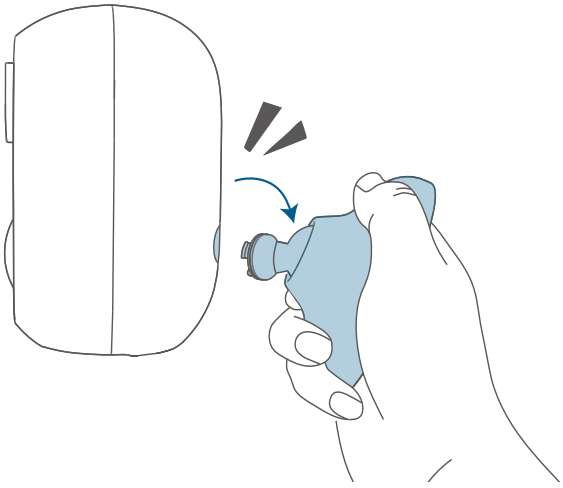

Compatible Devices

Finding the Part Number: The Part Number (PN) of any eufy device can be located on the product or within the eufy app.

(Device Settings > General > About Device > The first five characters of the Serial Number)

1. HomeBase models compatible with **eufyCam C35/C34 (T8110)**

Part Number	Product Name
T8025	HomeBase Mini
T8030	HomeBase 3

2. Devices compatible with **HomeBase Mini (T8025)**

Part Number	Product Name
T8110	eufyCam C35/C34
T8134	SoloCam C20
T8224	Video Doorbell C30
T8170	eufyCam Solo S3
T8416	4K Indoor Cam Dual
T8417	Indoor Cam Pan & Tilt 4K
T8425	Floodlight Cam 3K
T8426	Floodlight Cam 2K
T8214	Video Doorbell E340
T8223	Video Doorbell C31
T8910	Motion Sensor
T8900	Entry Sensor

Core Camera Functions and Settings

1. Night Vision Mode

The camera automatically activates night vision mode when low-light conditions are detected. Three night vision modes are available: PureColor (Default), Spotlights, and Infrared.

Set it via: ***Settings*** > ***Video Settings*** > ***Night Vision***

2. Motion Detection

eufyCam C35 supports human (enabled by default), vehicle, and pet detection. When connected to HomeBase, it also enables facial recognition.

3. Power Manager

The camera offers three recording modes: Optimal Battery Life (on by default), Optimal Surveillance, and Customize Recording. Each mode sets a maximum duration for recordings triggered by an event. Longer recordings will result in shorter overall battery life.

Set it via: ***Settings*** > ***Power Manager***

4. Security Mode

① **Edit the Mode**

You can edit the security mode of the camera to enable/disable video recording, notifications, and alarms.

Set it via: Tap ***Smart*** (at the bottom)> Tap ***Modes*** > Select the corresponding device > Choose a mode > Check or uncheck the options

② **Schedule Settings**

You can enable/disable security mode based on your preset schedule.

Set it via: Tap ***Smart*** (at the bottom)> Tap ***Modes*** > Select the corresponding device > Tap ***Schedule*** > Tap **"+"** to add a schedule

5. Download Recordings

Video recordings can be saved to your phone's gallery.

Set it via: Tap ***Events*** (at the bottom) > Play the video to download > Tap ***Download***

Other Information

eufyCam C35:

Default Open Port 1: Wi-Fi (2.4GHz)

Port Description:

1. When powered on for the first time or after a reset, if there is no configured Wi-Fi information, it may enter network pairing mode (such as AP/BLE pairing);
2. In normal working mode, it will automatically connect to the router and save the SSID and password;
3. If you need to switch Wi-Fi configuration, you can use the App or follow the instructions in the manual to reconfigure the network.
4. When connected to HomeBase, the device listens on UDP port 10200 to receive audio and video data for downstream intercom functionality.
5. In Solo mode, the device listens on UDP port 32108 to receive app device discovery, LAN device discovery, and establish P2P connections.
6. In Solo Mode, the device dynamically listens on random UDP ports between 10000 and 30000 for P2P communication, including command transmission/reception and data transfer.

Default Open Port 2: BLE (Bluetooth Low Energy)
Port Description:
1. Bluetooth remains inactive during normal device operation. It automatically enables broadcast and communication functions during the binding process to provide network configuration services. After the network configuration is completed, BLE pairing will automatically be disabled.
2. When connecting the phone and camera directly, Bluetooth will automatically turn on and provide communication services. When this feature is disabled, Bluetooth will automatically turn off.

HomeBase Mini:

Default Open Port: Wi-Fi (2.4GHz)
Port Description:
1. HomeBase will activate a Wi-Fi hotspot upon power-up to establish connection with cameras;
2. HomeBase connects to your home router using standard Wi-Fi (2.4GHz/5GHz) for data upload, remote management, and cloud interaction. Encryption uses WPA2 or higher.

Default Open Port 2: Ethernet Port
1. After initial power-on or reset, HomeBase typically obtains an IP address via DHCP;
2. Check and confirm the Ethernet connection status in the device management interface or app. To use a wired connection, simply insert the Ethernet cable and ensure your router or switch is functioning properly.