1. About Your Omni S2 Pro

1.1 What's in the Box
1.2 Overview
1.3 Button Controls

2. Preparing Your Omni S2 Pro

2.1 Install the Base Station
2.2 Charge Your RoboVac
2.3 Download the App
2.4 Reset the Wi-Fi Connection

3. Using Your Omni S2 Pro

3.1 Important Tips Before Use
3.2 Mapping
3.3 Set Up No-Go Zone
3.4 Scheduled Cleaning
3.5 Select a Cleaning Mode

4. Using the Mopping System

5. Using RoboVac with Matter, Alexa, Siri, or Google Assistant Compatible Devices

6. Enabling / Disabling Child Safety Lock

7. Cleaning and Maintenance

7.1 Clean the Dust Bin
7.2 Replace the Roller Mop
7.3 Clean the Rolling Brush
7.4 Clean the Sensors, Cameras, and Charging Contact Pins
7.5 Replace the Dust Bag
7.6 Clean the Filter Tray
7.7 Clean the Dirty Water Tank

8. Troubleshooting

9. Specifications

10. Customer Service

11. Other Information

Network Configuration Instructions
Important Safety Instructions

1. About Your Omni S2 Pro

1.1 What's in the Box

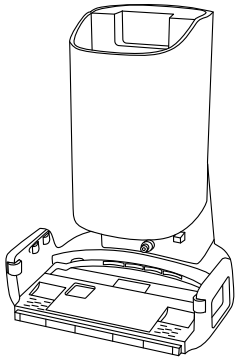

Base Station



Clean Water Tank

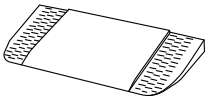

Detachable Base

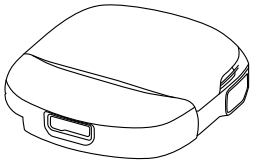

Robot Vacuum (RoboVac)

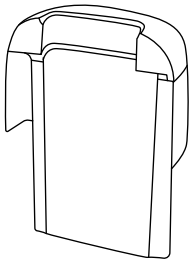

Dirty Water Tank

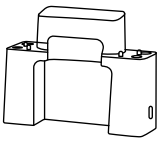

LCD Screen



Floor Cleaner



Fragrance Refill



Quick Start Guide



Safety Sheet



Power Cord

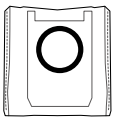

(Bonus)

Dust Bag

1.2 Overview

1.2.1 RoboVac

Front

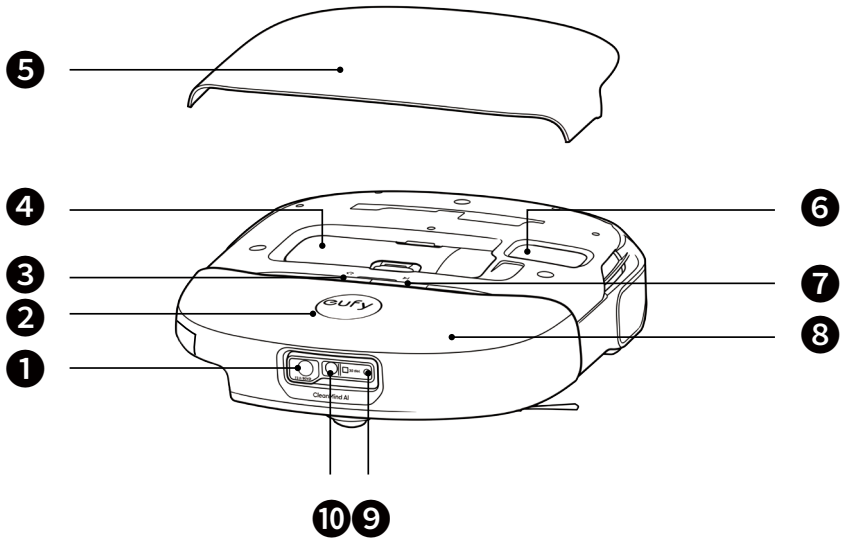

1. RGB Camera
2. Ring Indicator
3. Recharge Button
   - Short press: pause cleaning.
   - Short press again: return RoboVac to Base Station.
4. Dust Bin
5. Magnetic Cover
6. Fragrance Refill Cover
7. Start / Pause Button
   - Short press: start / pause cleaning.
   - Long press (3s): power off.
   - Long press (15s): force shutdown.
8. Bumper
9. LED Indicator
10. 3D dTOF Sensor

Back

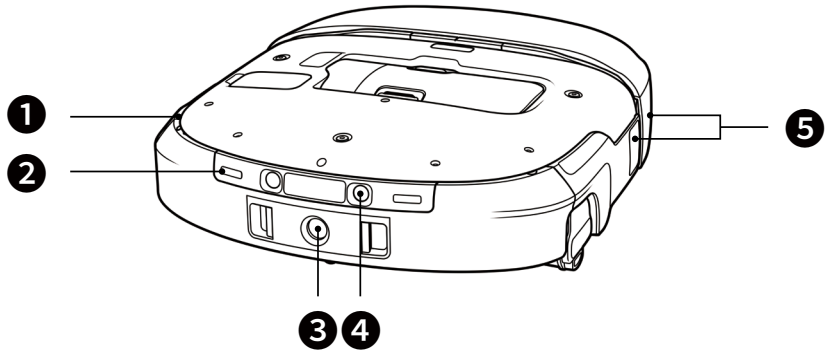

1. Air Outlet
2. Charging Contact Pins (×2)
3. Dirty Water Collection Port
4. Water Injection Port
5. Wall Sensor

Dust Bin

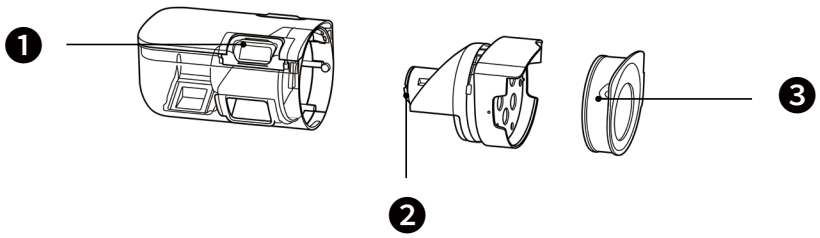

1. Dust Bin Handle
2. Metal Filter
3. High-Performance Filter

Bottom

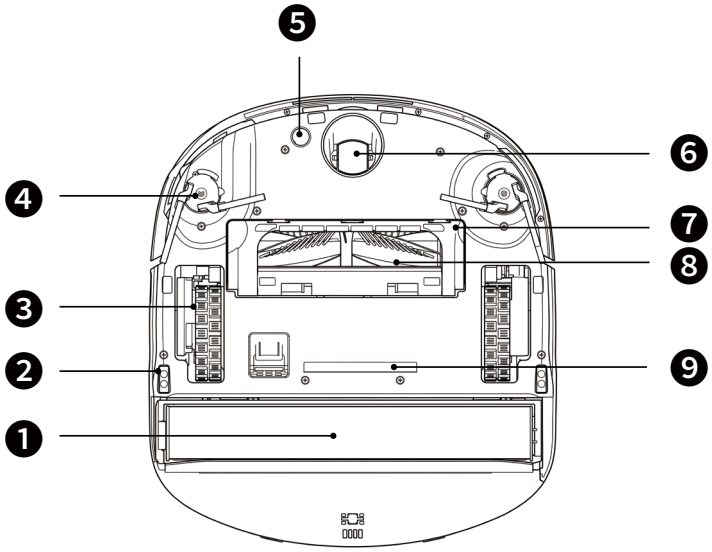

1. Roller Mop
2. Drop Sensors (×6)
3. Wheels (×2)
4. Side Brushes (×2)
5. Carpet Detection Sensor
6. Swivel Wheel
7. Brush Guard
8. DuoSpiral™ Rolling Brushes
9. UV-C LED

1.2.2 Base Station

Front

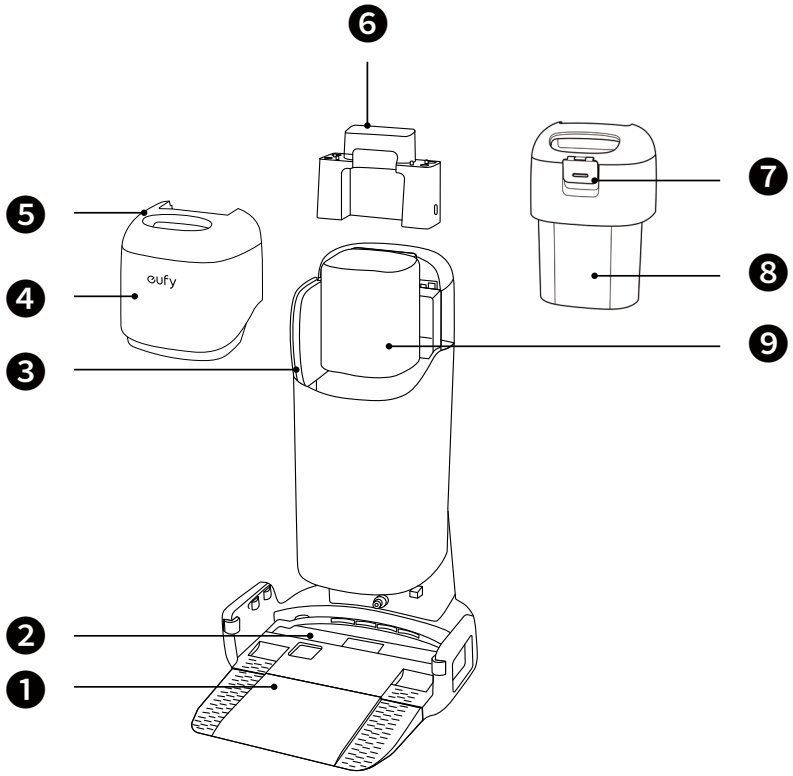

1. Detachable Base
2. Filter Tray
3. Slide Switch
   - Slide to open the dust bag cover.
4. Clean Water Tank
5. Clean Water Tank Cap
6. LCD Screen
7. Dirty Water Tank Release Button
   - Pull to open the dirty water tank cover.
8. Dirty Water Tank
9. Dust Bag

Back

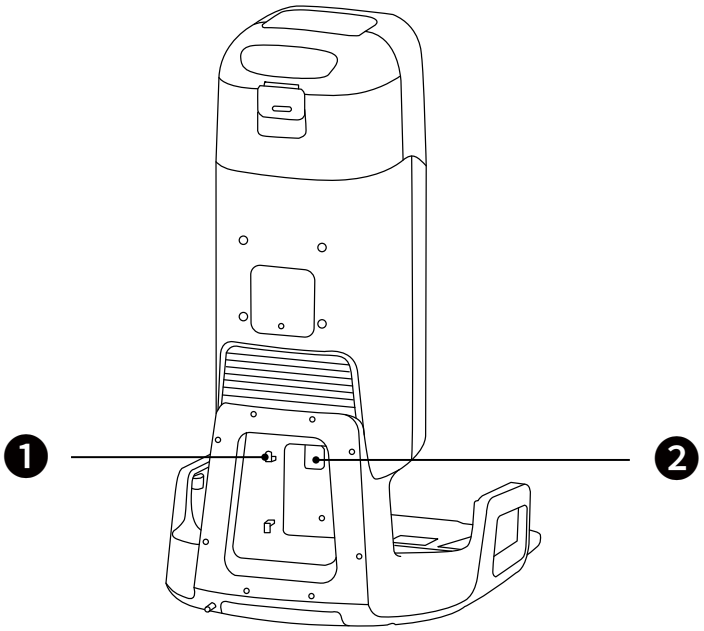

1 Cord Winding Groove
2 Power Socket

1.3 Button Controls

RoboVac		• Short press: pause cleaning • Short press again: return RoboVac to Base Station
		• Short press: start / pause cleaning • Long press (3s): power off • Long press (15s): force shutdown
		• Long press simultaneously (3s): reset Wi-Fi connection • Long press simultaneously (10s): reset to factory settings
Base Station	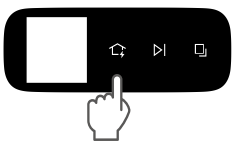	Short press: return RoboVac to Base Station
	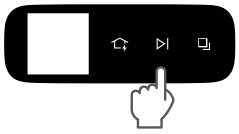	Short press: • Start cleaning when the RoboVac is idle or drying • Pause/Resume cleaning when a task is in progress • Continue the current task during dust collection or mop washing
		Short press: switch between Vacuum Only mode and Vacuum / Mop mode

2. Preparing Your Omni S2 Pro

2.1 Install the Base Station

1. Peer off the sticker, and install the detachable base by pressing down firmly on both sides.

The RoboVac may be unable to return to the Base Station if the detachable base is not installed correctly.

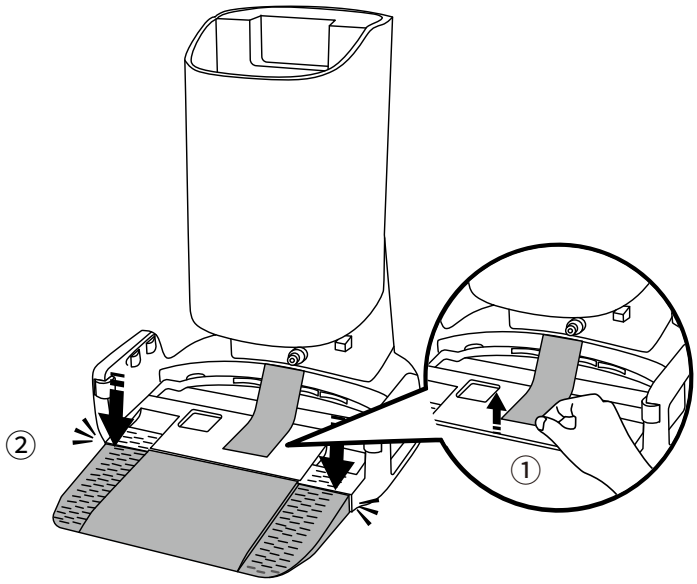

2. Place the Base Station in a location with a strong Wi-Fi signal where the RoboVac can easily reach it. Ensure at least 1.5 m (4.9 ft) of clearance in front and 0.5 m (1.6 ft) on both sides, on a hard, open floor. It is recommended to place it against a wall, on a hard, level surface.

- Do not place the Base Station in stairways, corridors, or other areas without sufficient surrounding space. The RoboVac may fall, causing damage or malfunction.
- The recommended clearance on the illustration is a suggested value based on testing, to ensure the RoboVac operates optimally, returns to the station for charging, and cleans the designated area effectively. You may adjust the clearance distance as necessary to suit the actual working environment of the RoboVac.

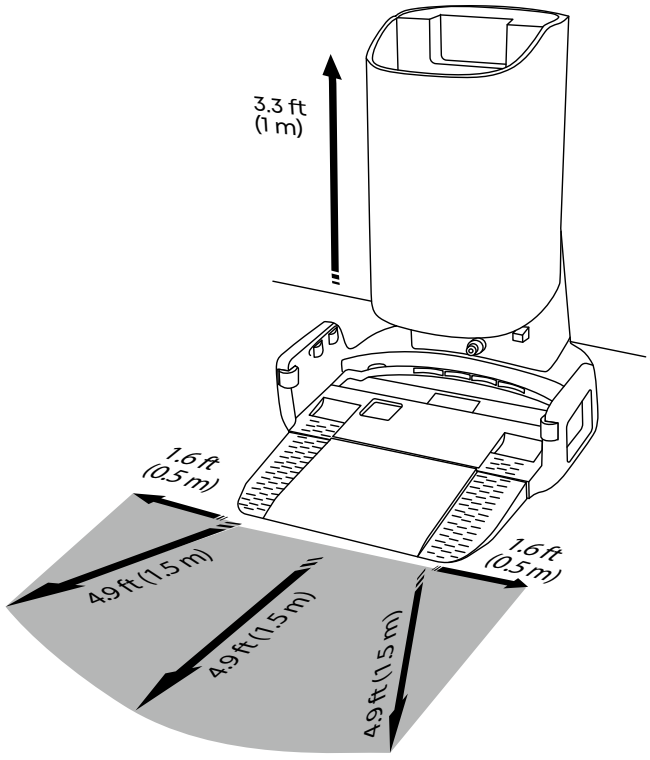

3. Connect the power cord to the Base Station and a wall outlet.

Always keep the Base Station plugged in to ensure the connection between the RoboVac and the Base Station is successful; otherwise, the RoboVac will not automatically return to it.

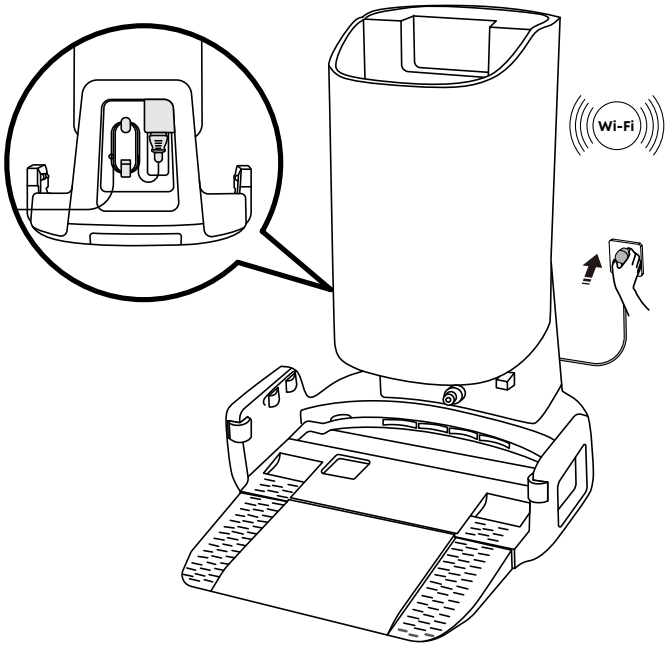

4. Remove the sticker on the PIN port. Then, install and firmly press down the LCD screen.

   Once installed, an animation will appear on the screen.

Before installing the LCD screen, make sure the docking area between the Base Station and the LCD screen is dry and free of any water stains.

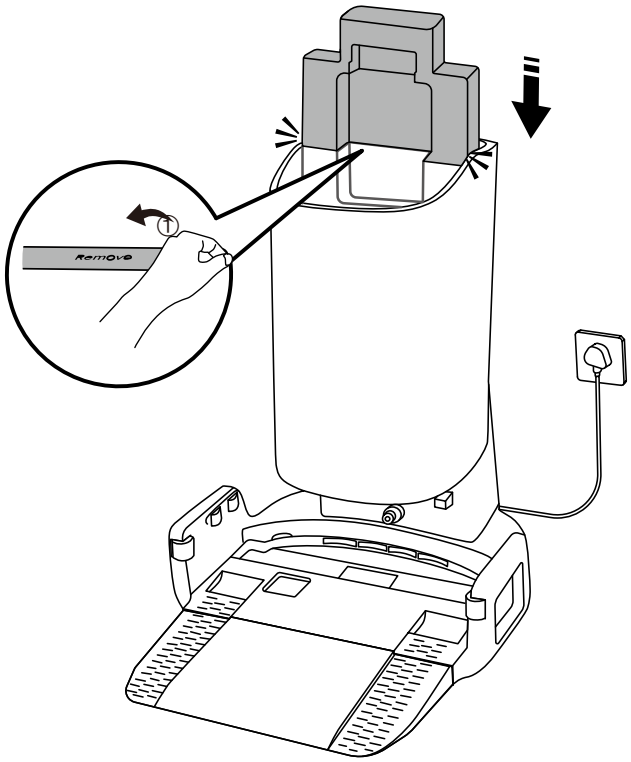

5. Peel off the seal from the opening and bottom of the floor cleaner, then insert the bottle into the cleaner slot. Make sure the floor cleaner is securely installed.

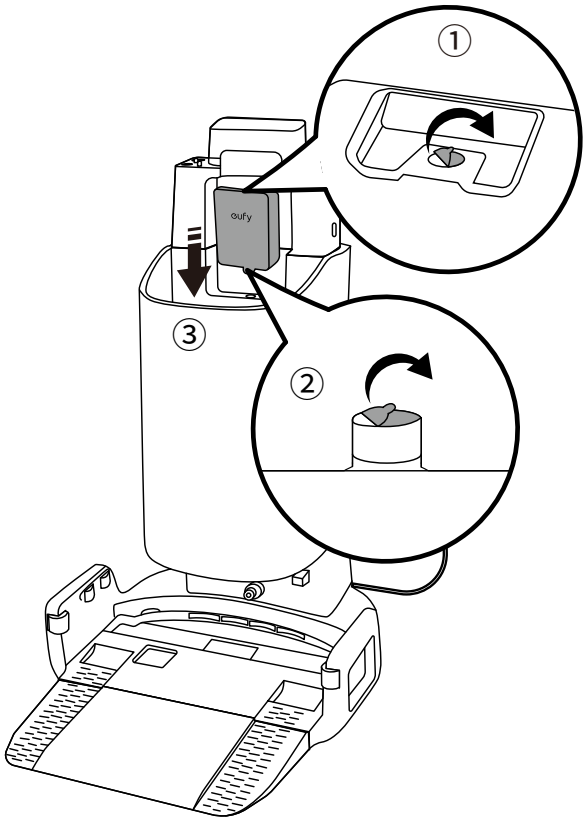

6. Install the dirty water tank onto the Base Station.

Before installing the dirty water tank, make sure the dirty water tank cap is properly closed, and the latch clicks into place.

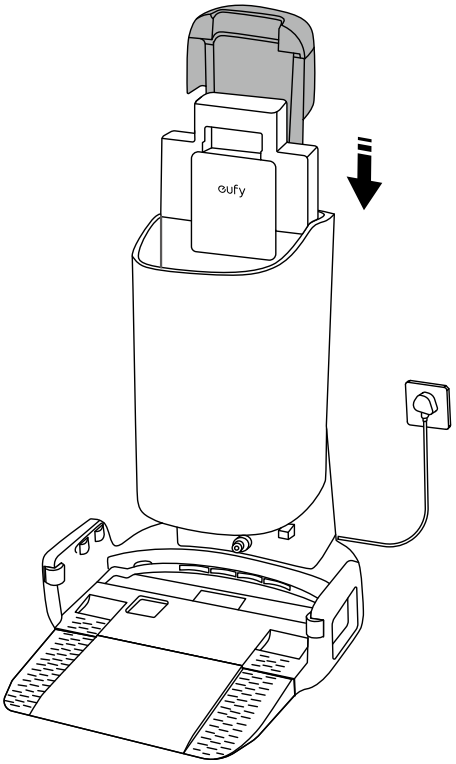

7. Add clean water to the clean water tank until it reaches the MAX water line. Then, close the clean water tank cap and install the clean water tank onto the Base Station.

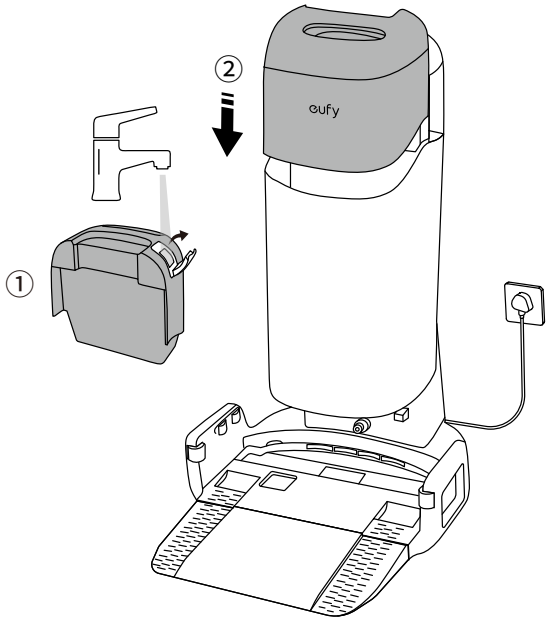

2.2 Charge Your RoboVac

1. Remove the foam blocks from the RoboVac.

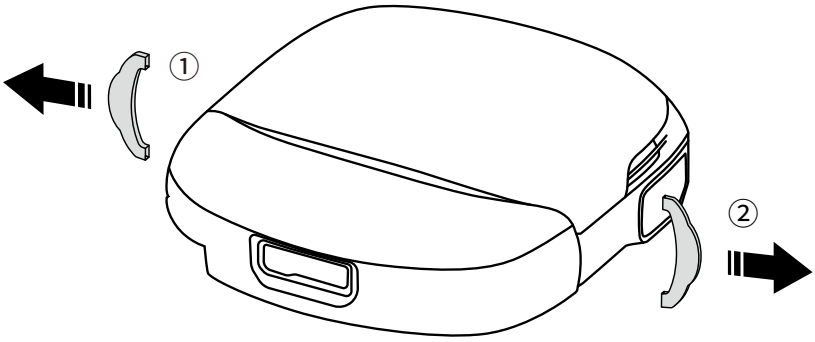

2. Open the magnetic cover of the RoboVac and the fragrance refill cover, then install the fragrance refill in the slot following the diagram below.

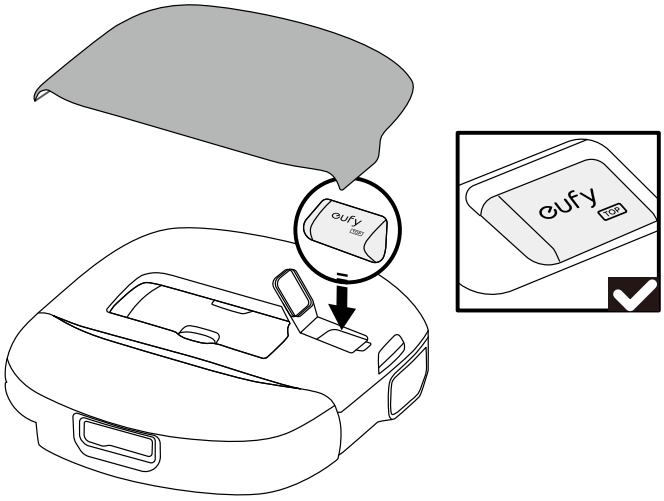

3. Attach the RoboVac to the Base Station. The RoboVac will power on and start charging automatically.

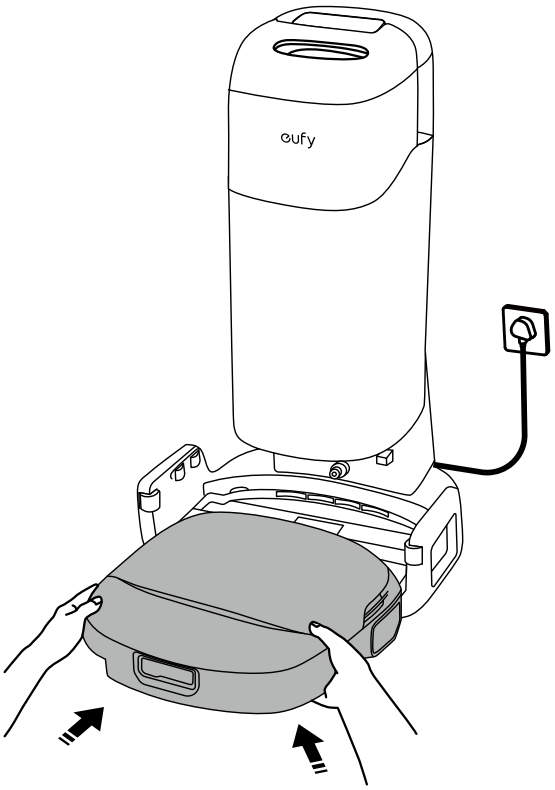

2.3 Download the App

To enjoy all the available features, it is recommended to download the app.

Before you start, ensure:

- Your smartphone runs iOS 13.0 or later, or Android 8.0 or later.
- Your Wi-Fi router broadcasts a 2.4 GHz signal.

1. Download the app from the App Store (iOS devices) or Google Play (Android devices).
2. Open the app. Create a new account or log into your own Anker eufy account.

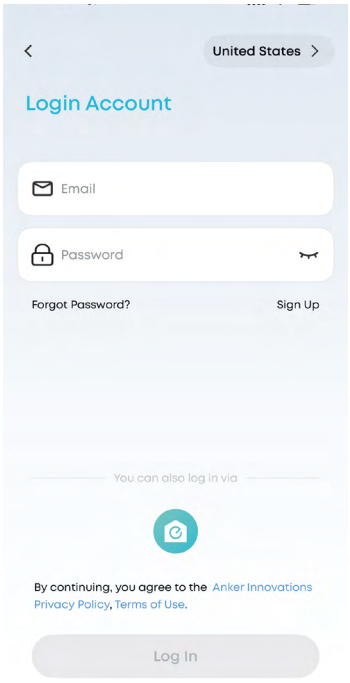

3. Tap the [+] icon > **Add Device** > **Clean** > **Robot Vacuum-S Series** > **S2 Pro**.

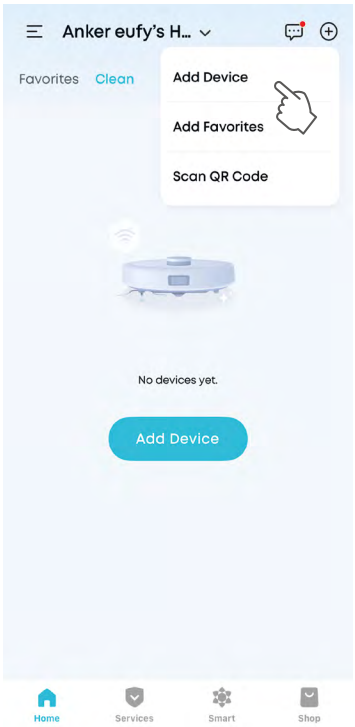



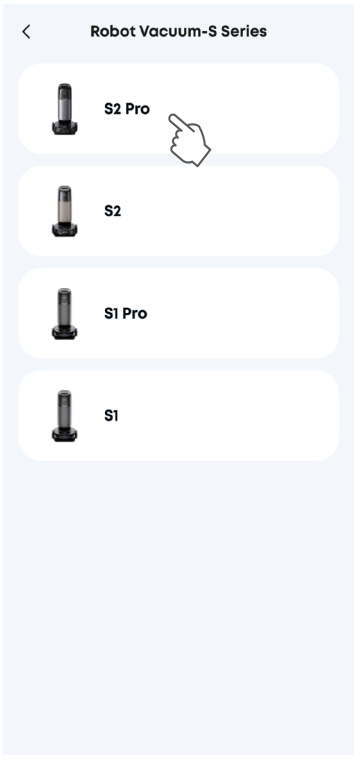

4. Follow the in-app instructions to set up the Wi-Fi connection.

2.4 Reset the Wi-Fi Connection

If you encounter issues when connecting your RoboVac to the app, try to reset the Wi-Fi connection.

Press and hold both the recharge button and the start / pause button simultaneously for 3 seconds until you hear a voice prompt.

The LED indicator on RoboVac will flash white quickly. Then you can follow the in-app instructions to set up the Wi-Fi connection again.

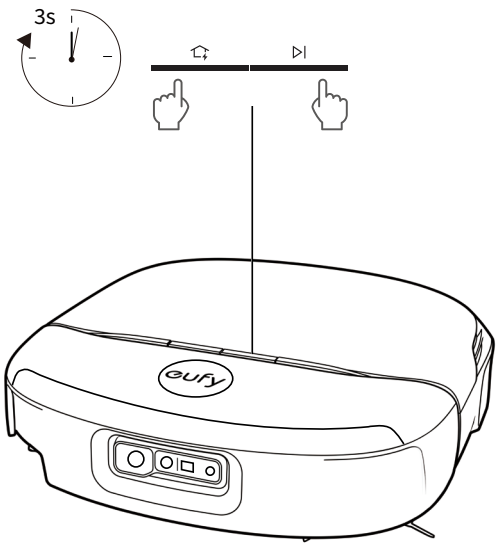

3. Using Your Omni S2 Pro

All UI images shown in this section are for illustration only, and they may be subject to change due to software updates. Please refer to the actual app interface for the most accurate information.

3.1 Important Tips Before Use

A. Remove power cords and small objects from the floor that may entangle RoboVac.

B. Before mapping, it is strongly recommended to place physical barriers in front of fireplaces and certain areas (e.g. stairway) that may cause damage to RoboVac if entered. For future use, set no-go zones or virtual boundaries via the Anker eufy app.

C. Avoid vacuuming large amounts of water as it will potentially damage the device.

D. Do not use the RoboVac on floors with standing water, in wet areas such as bathrooms or laundry rooms, or on floors that have been heavily flooded. The RoboVac is designed for routine damp mopping on hard floors only; prolonged exposure to excessive moisture may damage the device.

E. Do not immerse the RoboVac or the Base Station in water or any other liquid. Do not rinse the main body of the RoboVac or the Base Station under running water. Only the detachable parts listed in Chapter 7 are washable. Water entering the internal components may cause electrical damage and void the warranty.

F. RoboVac may climb on top of objects less than 35 mm (1.38 in) in height. Remove these objects if possible.

G. Anti-drop sensors will prevent RoboVac from tumbling down stairs and steep drops in most cases. Sensors are less effective if dirty or used on carpeted / reflective floors. It is recommended to regularly wipe the sensors and set no-go zones, especially around stairs or any areas where the RoboVac might fall.

3.2 Mapping

This feature is designed to help your RoboVac efficiently learn the layout of your home, ensuring thorough and systematic cleaning. By creating a detailed floor plan, your RoboVac can navigate and clean with precision.

To maximize the efficiency and accuracy of the mapping process, please follow these steps:

- **Open All Doors:** Ensure all doors within the cleaning area are open. This allows the robot to access and map each room seamlessly.
- **Block Off Restricted Areas:** If there are specific zones you don't want the RoboVac to enter, use physical barriers to block these areas. This can enhance mapping accuracy and prevent the RoboVac from entering unwanted spaces. After the mapping is completed, you can remove physical barriers, and set up restricted areas to prevent the RoboVac from entering those areas.
- **Remove Obstacles:** Clear any objects, such as toys, cables, small furniture, or fringed carpets, that might obstruct the path or become entangled in its brushes. This helps RoboVac move freely and map the area without interruptions.
- **Do Not Move the Base Station:** Once the floor plan is created, avoid relocating the base station. RoboVac relies on the base station as a reference point for navigation and mapping. Moving it may disrupt the accuracy of the floor plan.

To start the mapping process, tap the device card and then tap **Start** in the app.

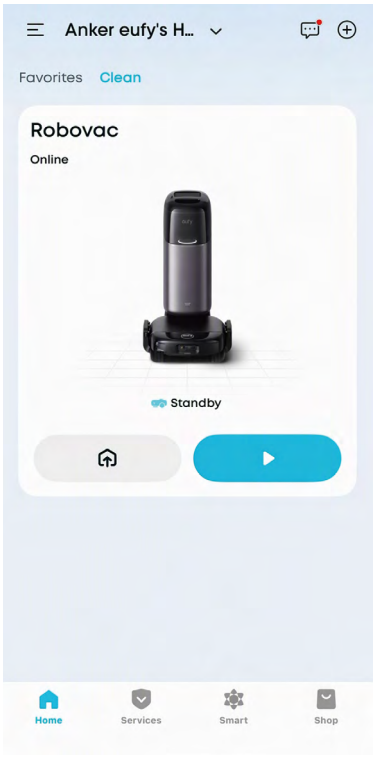

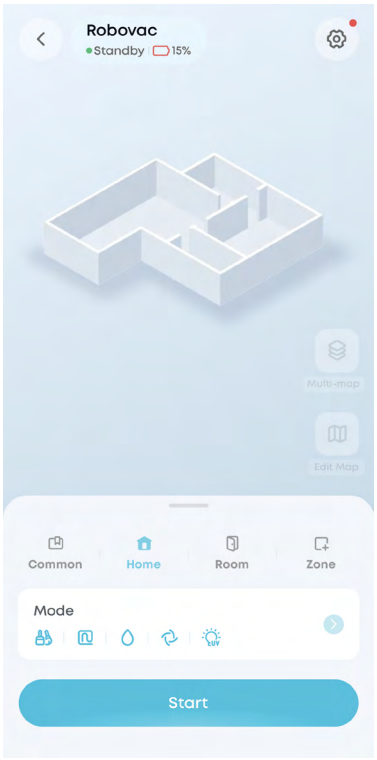

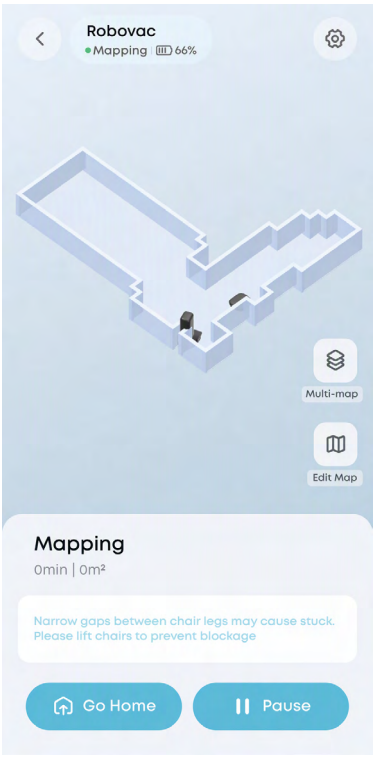

3.3 Set Up No-Go Zone

In the Anker eufy app, tap **Edit Map** > **No-Go Zone** > **Add** to set up a “No-Go Zone” as a restricted area, eliminating the need for physical barriers (including boundary strips).

This feature is only designed for dividing the cleaning zones, not for isolating hazardous areas.

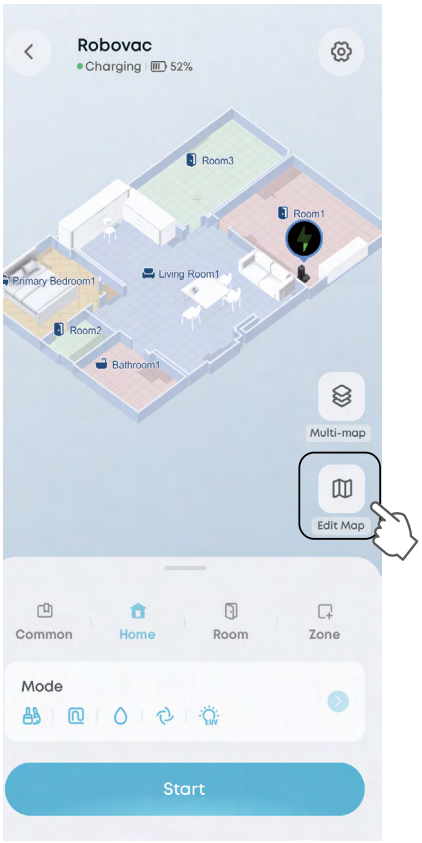

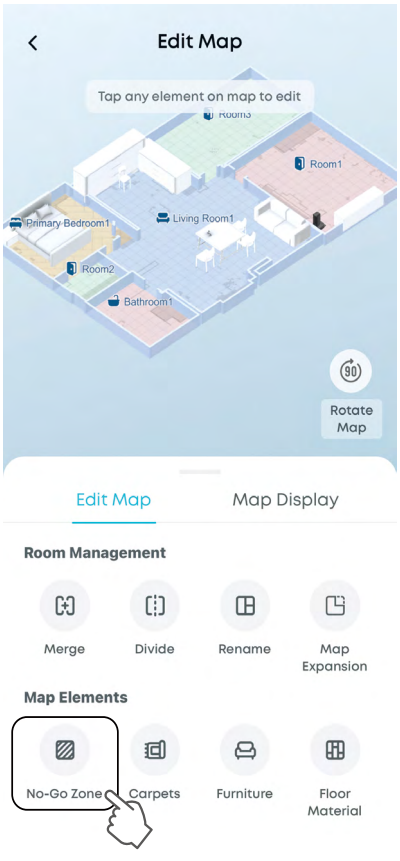

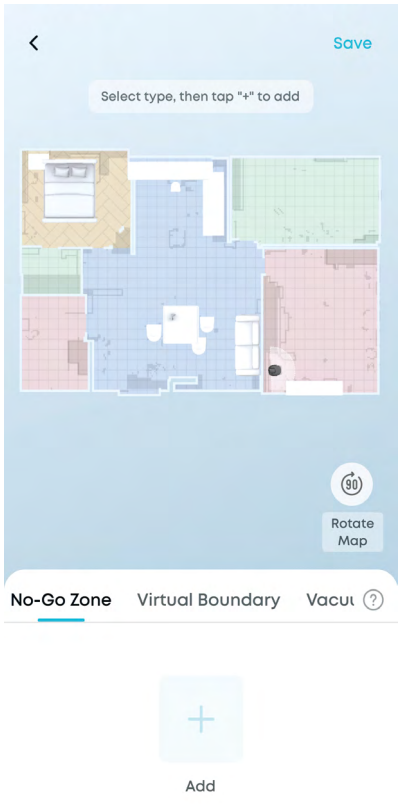

3.4 Scheduled Cleaning

Tap the ⚙ icon in the upper-right corner and select **Schedules**.

On this page, you can schedule RoboVac to start cleaning at a particular time.

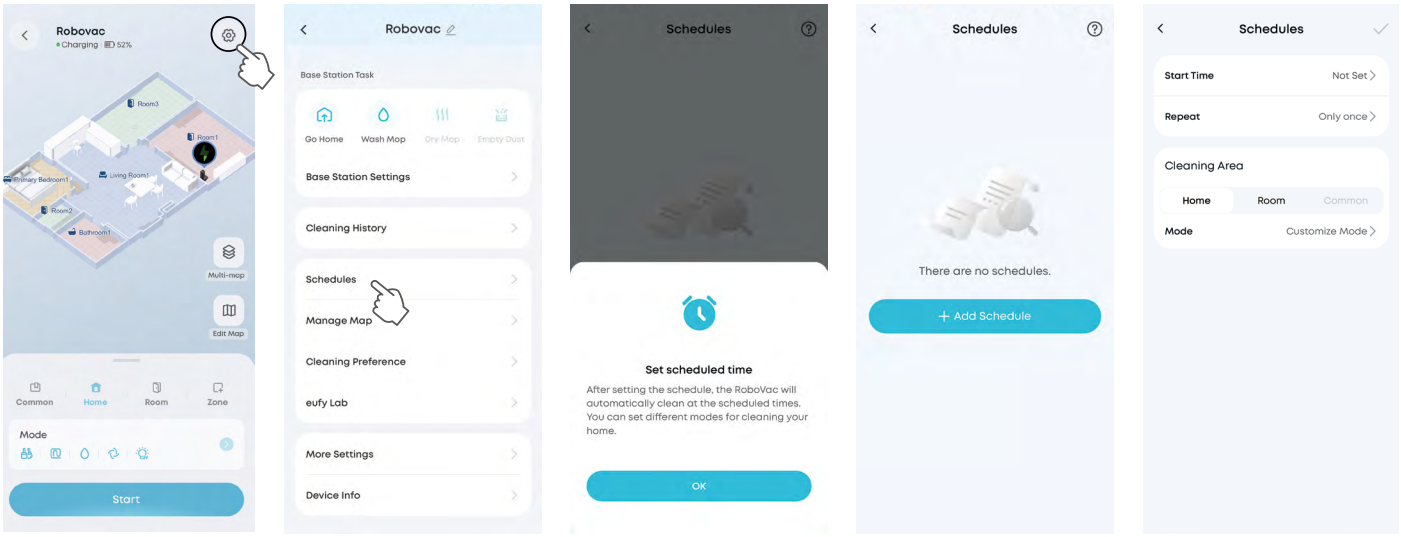

- You can set the time and customize cleaning schedules from Sunday to Saturday on the Anker eufy app. This function is only available on the app.
- During the Do Not Disturb period, RoboVac will remain silent, with automatic dust collection and voice notifications disabled.

3.5 Select a Cleaning Mode

Use the Anker eufy app to start / pause cleaning or select a cleaning mode. In each mode, you can further customize settings such as cleaning intensity, water level, and suction level.

You can also enable / disable **UV Cleaning** in the app. When enabled, the ring indicator on the RoboVac turns purple, and the UV light operates during cleaning to help reduce common floor bacteria.

- The Omni S2 Pro allows continuous water level adjustment from 3% to 100% in the Anker eufy app.
- Do not touch the UV module, reach under the robot, or look directly at the UV light while it is on; the UV light turns off automatically when the robot is lifted.

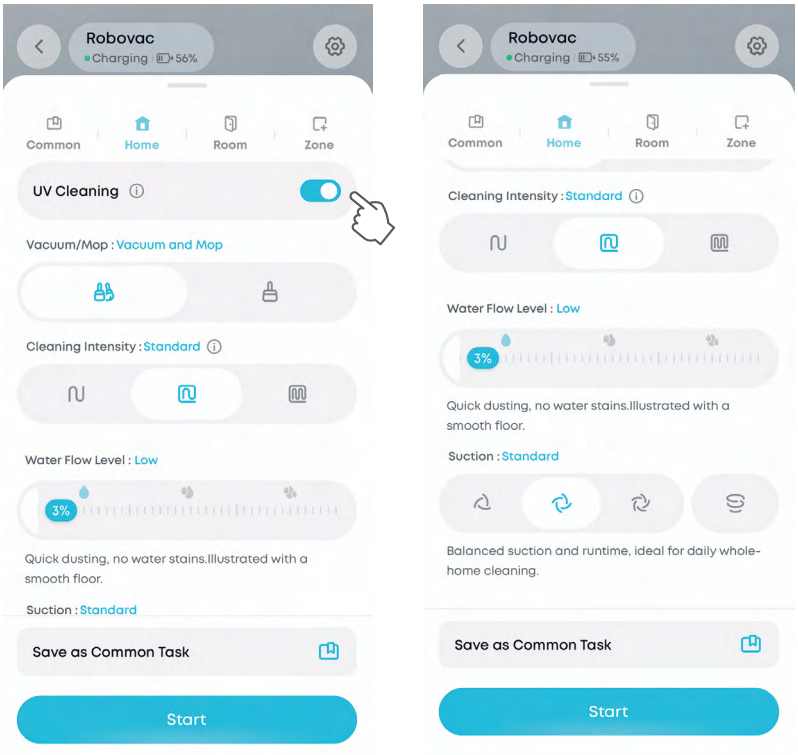

3.5.1 Home Cleaning Mode

Tap **Start** in the Anker eufy app to enable Home Cleaning mode.

After startup, RoboVac moves from the Base Station and automatically determines its cleaning route. When cleaning is finished, RoboVac automatically returns to the Base Station.

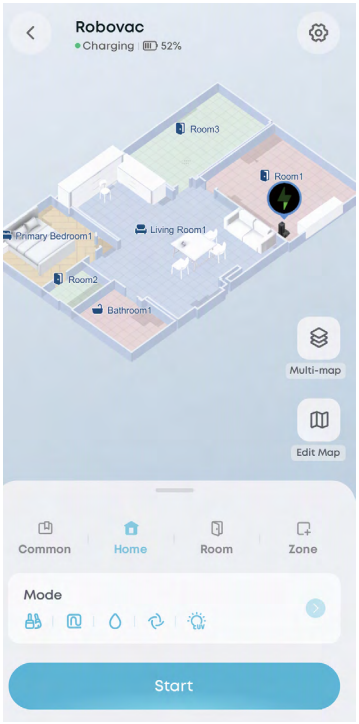

3.5.2 Room Cleaning Mode

In this mode, your home is automatically divided into several rooms in the Anker eufy app.

You can customize room settings and select which rooms to clean. RoboVac will clean only the selected rooms, then return to the Base Station after cleaning.

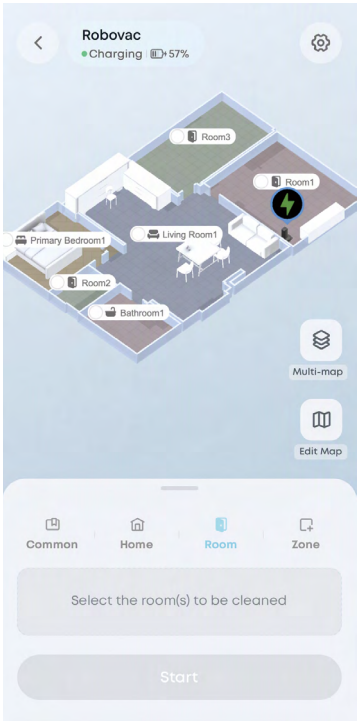

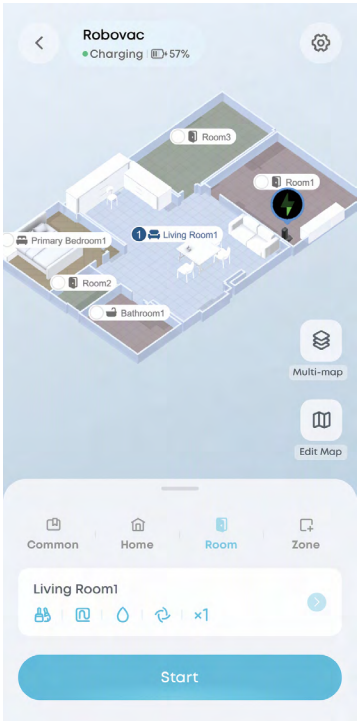

- Enable Room Cleaning mode only after RoboVac has created the map.
- It is recommended that RoboVac move from the Base Station to start room cleaning.

3.5.3 Zone Cleaning Mode

In this mode, you can set up a cleaning zone and customize its size in the Anker eufy app. RoboVac will clean the selected zone only.

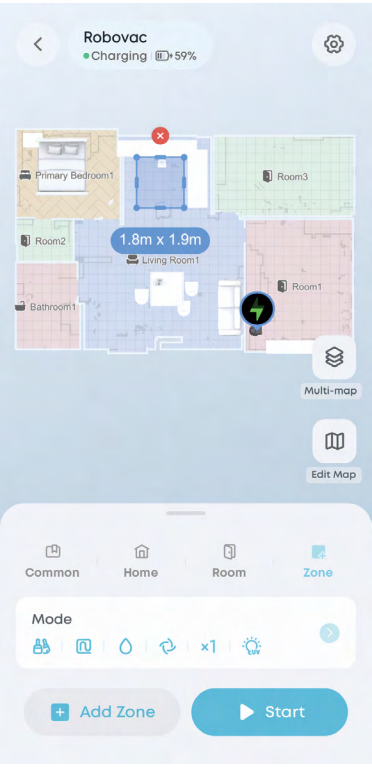

4. Using the Mopping System

1. Start cleaning. RoboVac will automatically vacuum and mop.
2. To prevent the development of odors in the roller mop, activate the drying function after each mopping task. It is strongly recommended to use **Standard Drying** every time to ensure optimal drying performance and reduce unpleasant smells.
3. Regularly empty and clean the dirty water tank to prevent mildew or unpleasant smells. Follow the diagram below to open and close the dirty water tank. You will hear a "click" when the cover is securely closed.

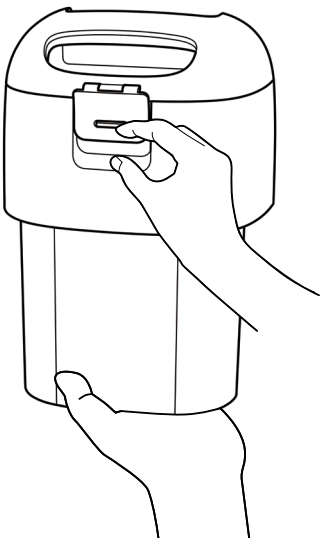

For more instructions on how to clean the dirty water tank, refer to the “**Cleaning and Maintenance**” section.

5. Using RoboVac with Matter, Alexa, Siri, or Google Assistant Compatible Devices

With Matter, Alexa, Siri, and Google Assistant compatibility, your RoboVac is just a voice command away from cleaning every corner of your house.

Before you start, make sure:

- RoboVac is attached to the Base Station to ensure there is enough power.
- RoboVac is connected to the Anker eufy app.
- To control your RoboVac with Siri, make sure you have an iPhone or iPad running a recent version of iOS.

To control RoboVac with Matter, Alexa, Siri, or Google Assistant:

1. Tap on the top left corner of the app's main interface, then find **Third Party Services** in the dropdown menu.
2. Follow the on-screen instructions to complete the setup.

6. Enabling / Disabling Child Safety Lock

To activate the child safety lock in the Anker eufy app, tap the ⚙ icon in the upper-right corner, then select **More Settings** > **Child Lock**.

Once the child safety lock is enabled, all buttons will be locked to prevent children from damaging the device or accidentally getting hurt.

Network configuration and factory reset are not affected by the child safety lock.

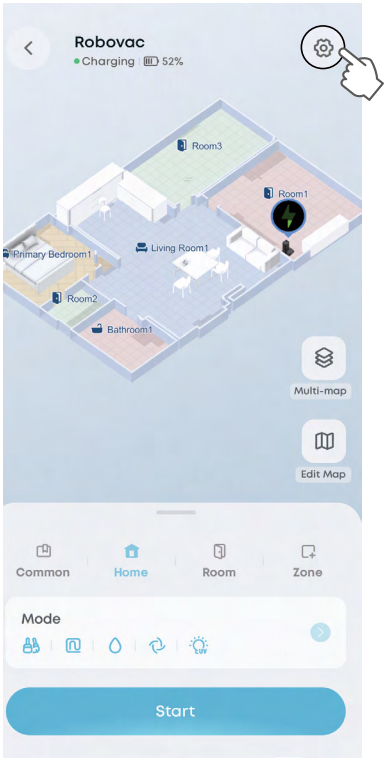

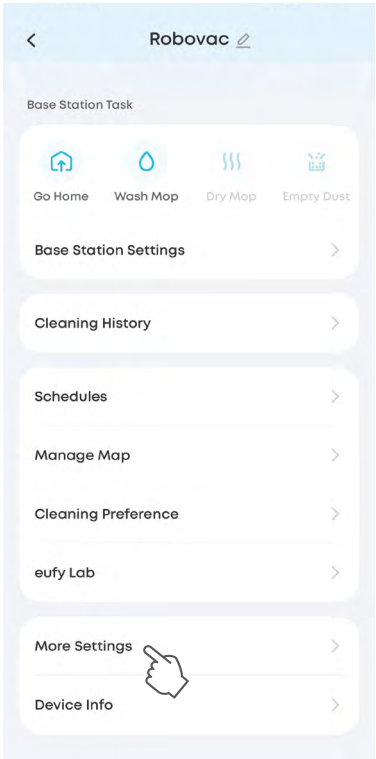

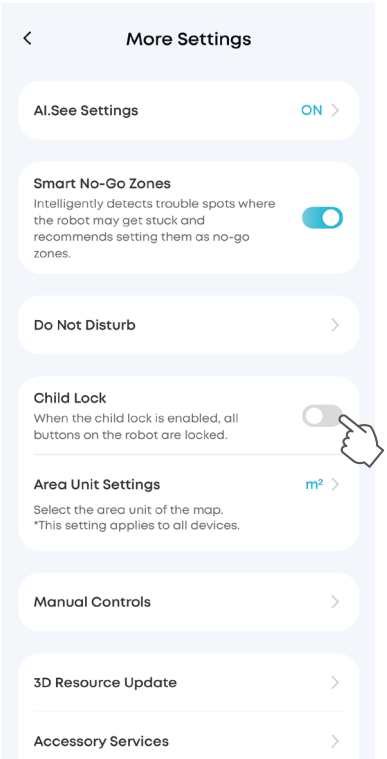

7. Cleaning and Maintenance

Before cleaning and maintaining, power off the device and unplug the power adapter. Any other servicing should be performed by an authorized service representative.

For optimal performance, follow the instructions below to clean and maintain Omni S2 Pro regularly. The cleaning and replacement frequency will depend on your usage habits.

Do not spray or pour water, cleaning agents, or any liquid onto the RoboVac, the Base Station, the power cord, or the charging contacts. Use a slightly damp (almost dry) soft cloth for exterior wiping only, and ensure no moisture enters any openings.

Recommended Cleaning and Replacement Frequency

Module	Components	Cleaning Frequency	Replacement Frequency
RoboVac	Dirty Water Reservoir	Every 30 hours	-
	Roller Mop	-	Every 180 hours
	Rolling Brushes	Every 60 hours	Every 360 hours
	High-Performance Filter	Every 180 hours	Every 360 hours
	Side Brushes	Every 60 hours	Every 180 hours
	Fragrance Refill	-	Every 60 hours
	Sensors	Every 360 hours	-
	Robot Sewage Tank Small Filter	-	Every 360 hours
	Swivel Wheel	Clean it based on actual conditions	-
Base Station	Floor Cleaner	-	Every 90 hours
	Dust Bag	-	Replace as needed
	Filter Tray	Every 30 hours	-
	Clean Water Tank	Clean it based on actual conditions	-
	Dirty Water Tank	Clean it based on actual conditions	-

7.1 Clean the Dust Bin

❶ Remove the magnetic cover and take out the dust bin.

❷ Rotate to open the dust bin.

❸ Empty the dust bin.

❹ Separate the metal and high-performance parts of the filter, and rinse them together with the dust bin. Air-dry completely before next use.

❺ Reinstall the filter.

❻ Place the dust bin and the magnetic cover back into the RoboVac.

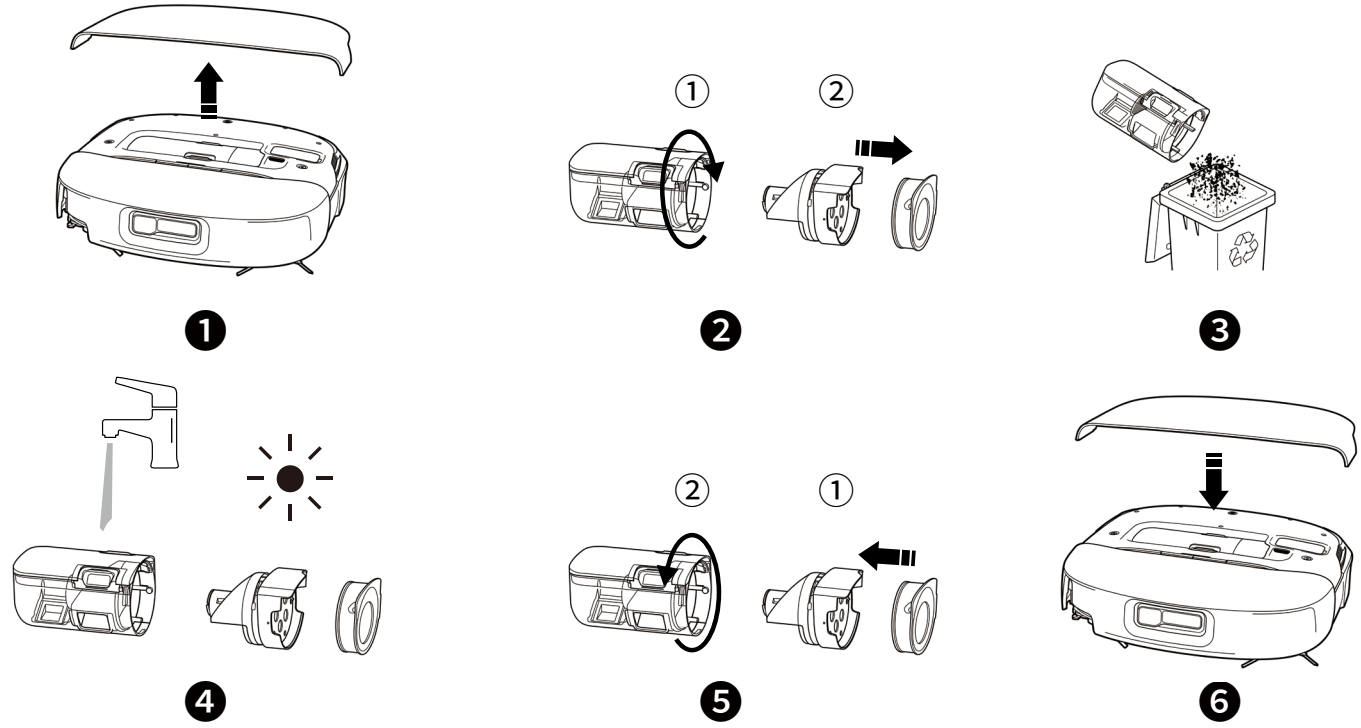

- Do not use the filter if it is not completely dry, otherwise it may affect the cleaning performance.
- Do not use a brush, hot water, or any detergent to clean the filter.

7.2 Replace the Roller Mop

❶ Remove the magnetic cover and take out the dirty water reservoir.

❷ Flip the RoboVac over, then push the red button at the side of the roller mop to release it.

❸ Remove the roller mop, and clean the debris from the roller chamber and the scraper.

❹ Press down the replacement roller mop until you hear a "click".

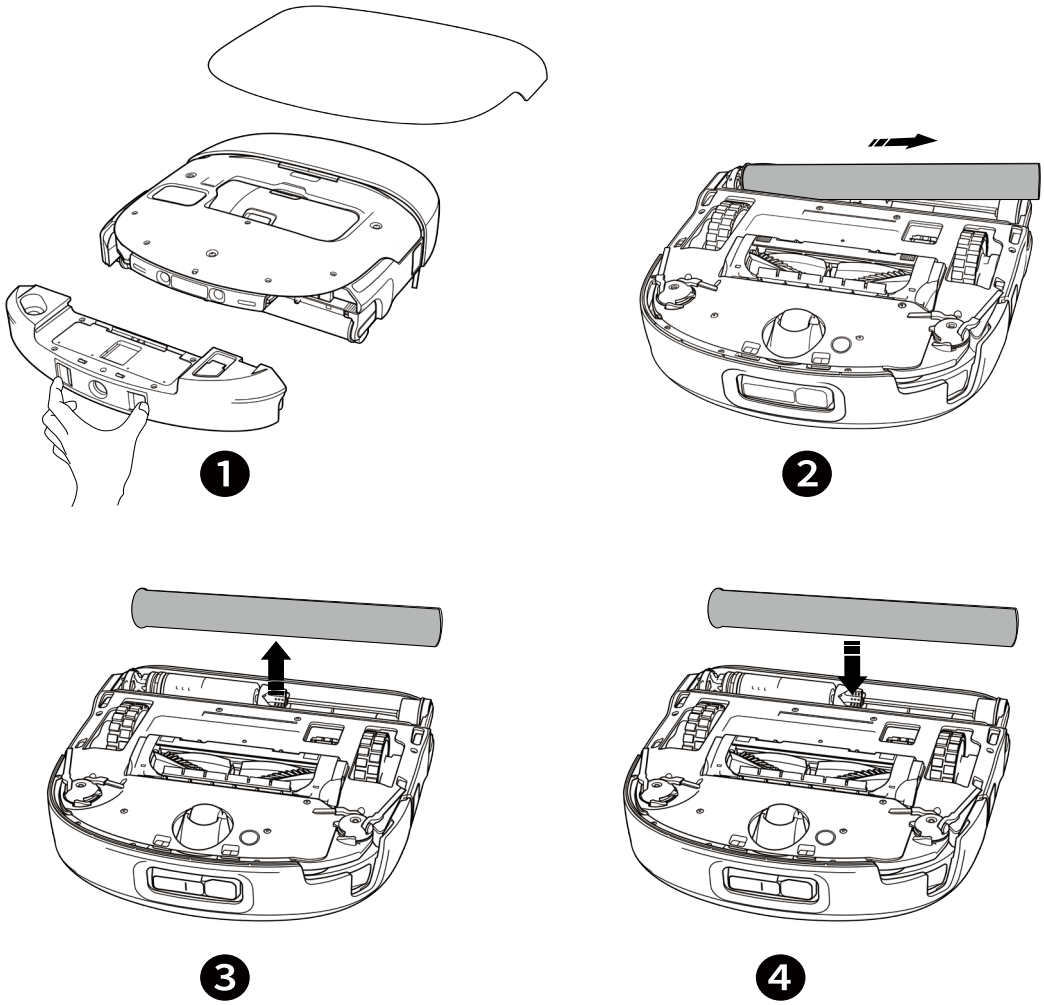

7.3 Clean the Rolling Brush

Before turning the RoboVac over, remove the dirty water reservoir first.

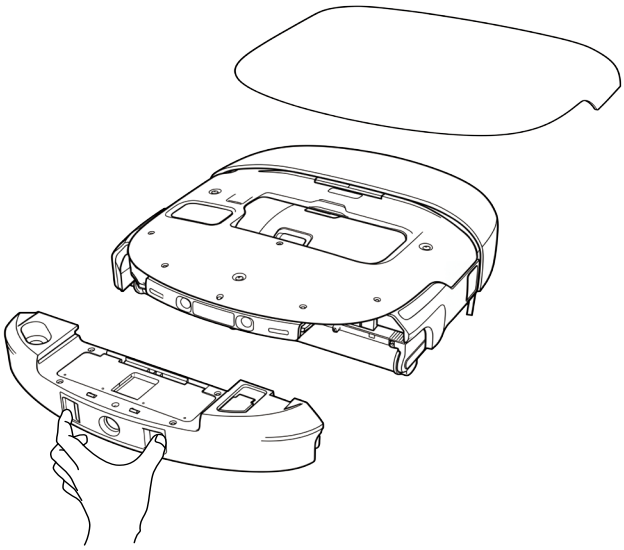

❶ Push the release tabs to unlock the brush guard.

❷ Push the side of one rolling brush inward and gently flip it up.

❸ Gently twist and pull out the rolling brush.

❹ Push the side of the other rolling brush inward and gently flip it up.

❺ Gently twist and pull out the other rolling brush.

❻ Rinse both rolling brushes and brush guard with running water. Air-dry the rolling brushes and brush guard completely before next use.

❼ Reinstall one side of the rolling brush and snap it into place.

❽ Reinstall the other side of the rolling brush and snap it into place.

❾ Press down to snap the brush guard into place.

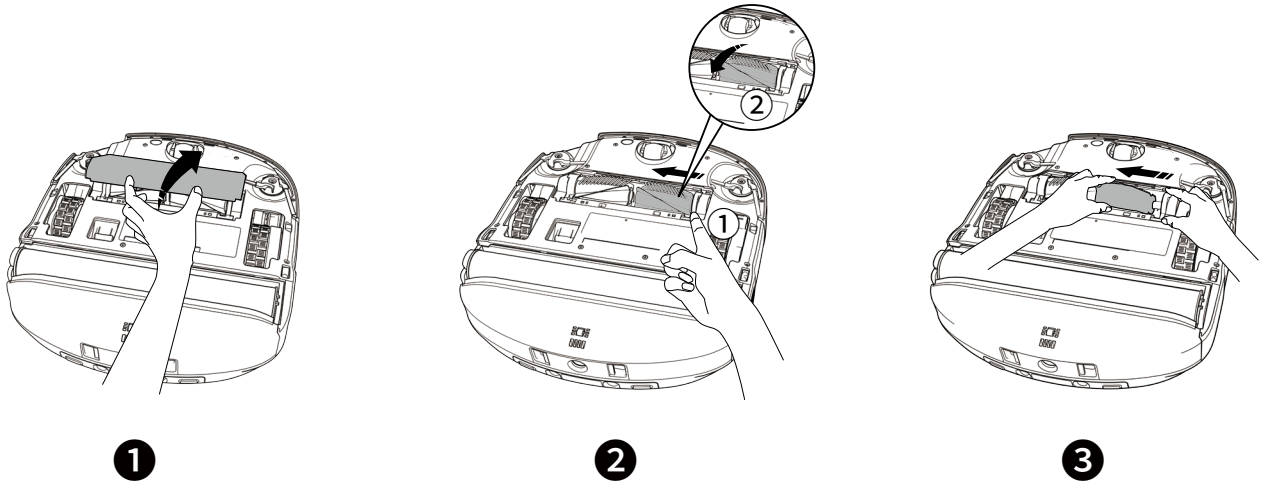

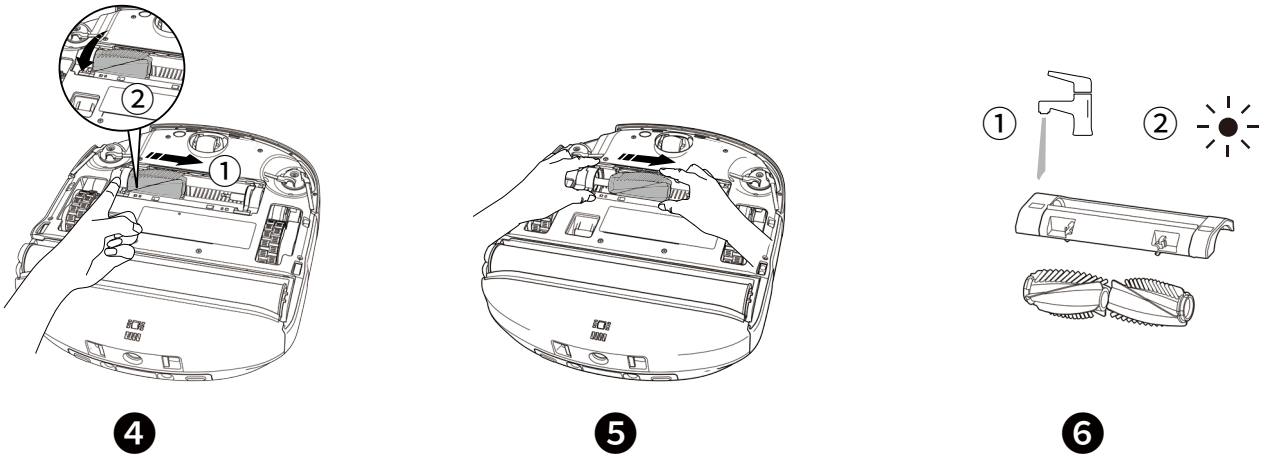

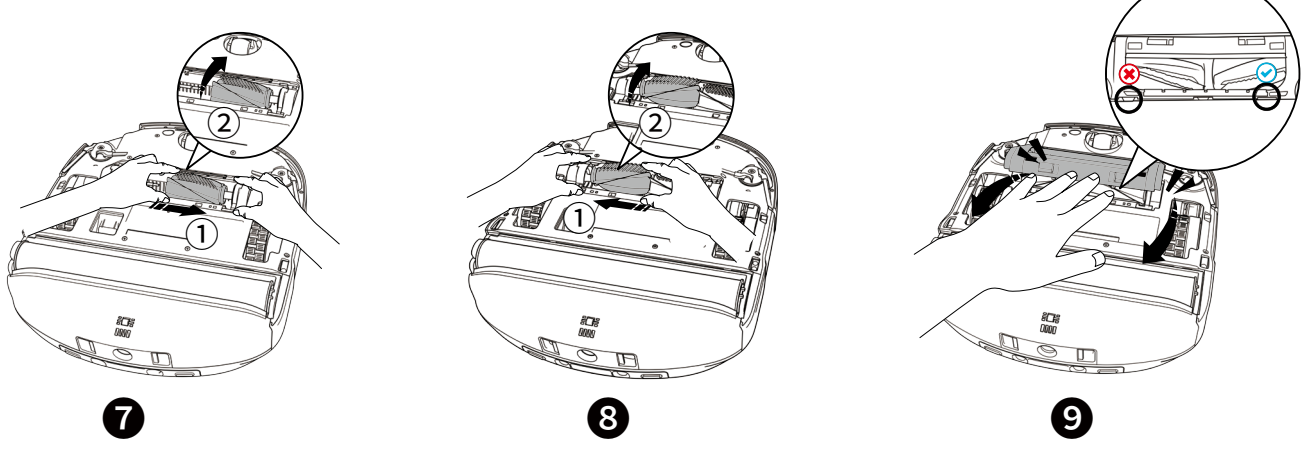

7.4 Clean the Sensors, Cameras, and Charging Contact Pins

To maintain the best performance, clean the sensors and charging contact pins regularly.

Dust off the sensors and charging contact pins using a soft cloth.

Before turning the RoboVac over, remove the dirty water reservoir first.

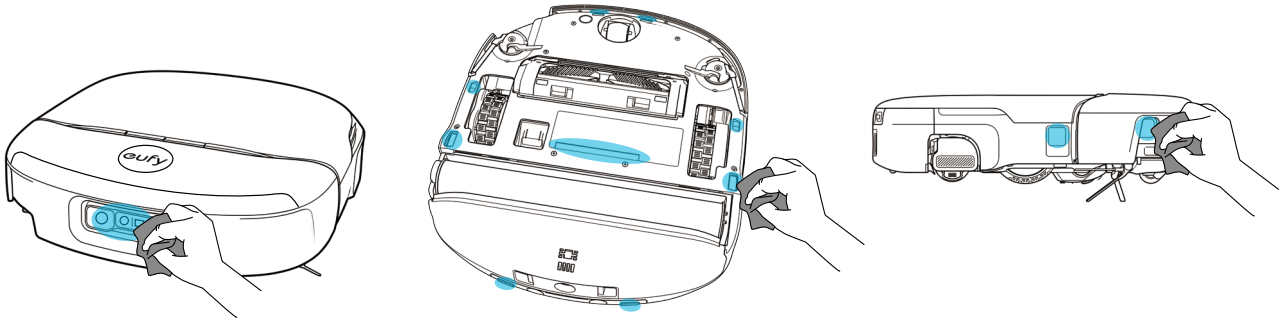

7.5 Replace the Dust Bag

❶ Remove the clean water tank.

❷ Open the cover of the dust bag container and take out the dust bag.

❸ Install a new dust bag. Ensure the dust bag is fully inserted, then close the cover.

❹ Place the clean water tank back.

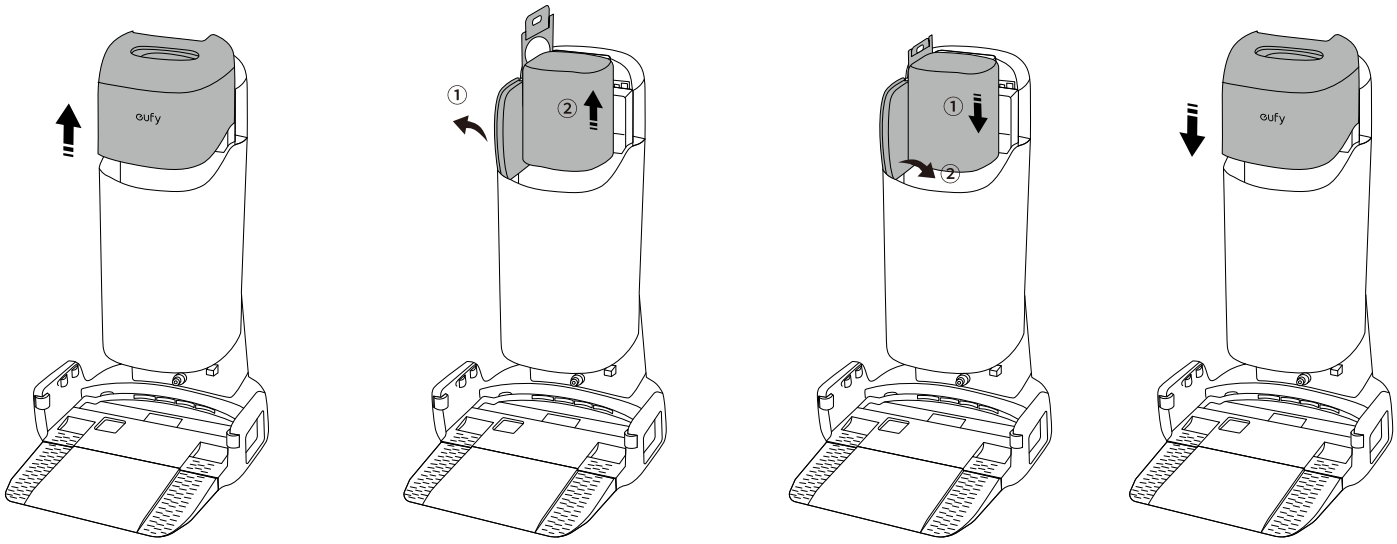

❶ ❷ ❸ ❹

7.6 Clean the Filter Tray

❶ Remove the filter tray from the Base Station.

❷ Rinse the filter tray thoroughly with water, and clean it with a brush.

❸ Air-dry the filter tray before next use.

❹ Gently tilt the filter tray inward and align it with the two clips inside, and press down firmly on both sides until it clicks into place.

*The LED indicator on the Base Station will turn from red to white when it is successfully installed.

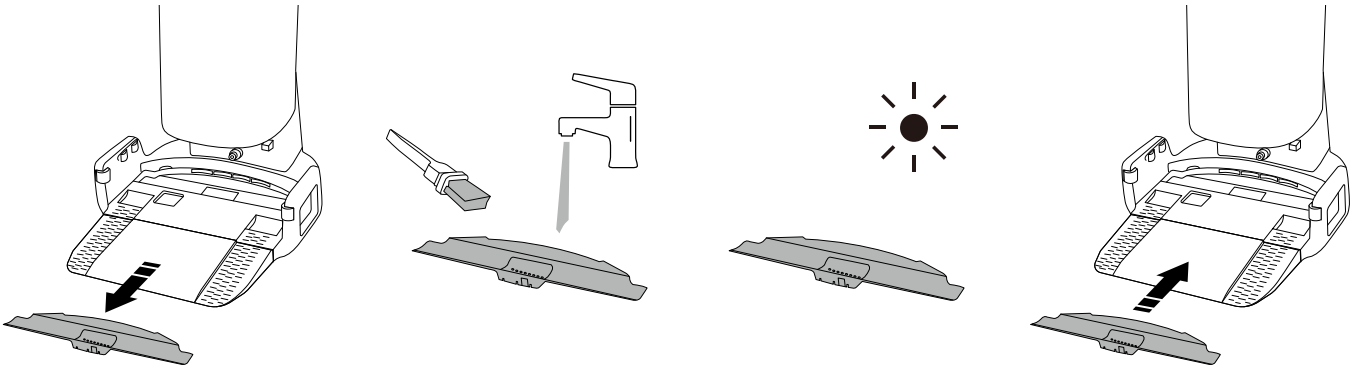

❶ ❷ ❸ ❹

7.7 Clean the Dirty Water Tank

❶ Remove the dirty water tank from the Base Station.

❷ Open and empty the dirty water tank.

❸ Rinse the dirty water tank thoroughly with running water. Then, pull out the water and close the dirty water tank cover.

*You will hear a "click" when it is securely in place.

❹ Reinstall the dirty water tank on the Base Station.

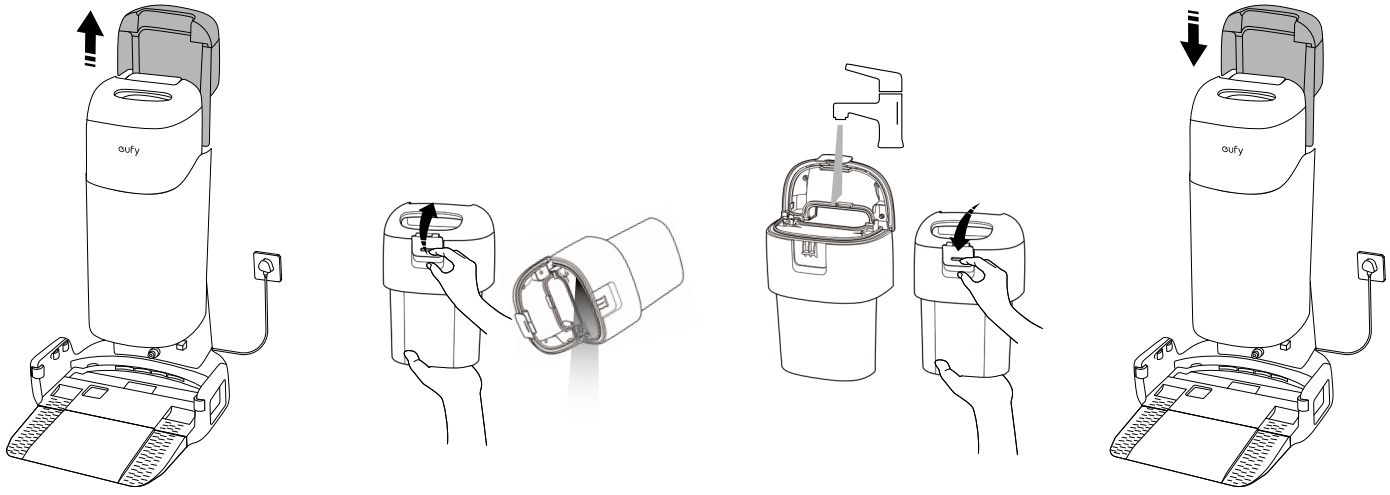

❶ ❷ ❸ ❹

8. Troubleshooting

When an error occurs, please refer to the in-app instructions for solutions.

If the problem persists, please contact support@eufy.com for help.

9. Specifications

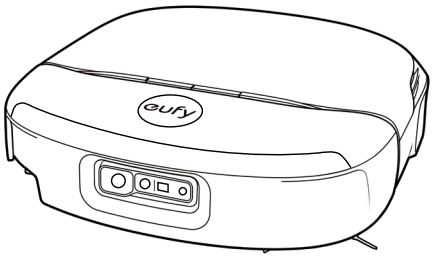	Dimensions	326 × 358 × 98 mm
	Weight	5.35 kg (11.79 lbs)
	Battery	Li-ion 4600 mAh DC 21.6 V
	Input	25 V ⎓ 1.5 A
	Cleaning Time	**Vacuum Only Mode** Quiet Suction: 144 min Standard Suction: 127 min Turbo Suction: 107 min MAX Suction: 90 min
	Charging Time	4 h
	Clean Water Reservoir	120 mL
	Dirty Water Reservoir	200 mL
	Operation Frequency	2.4G Band (2.412 GHz - 2.484 GHz)
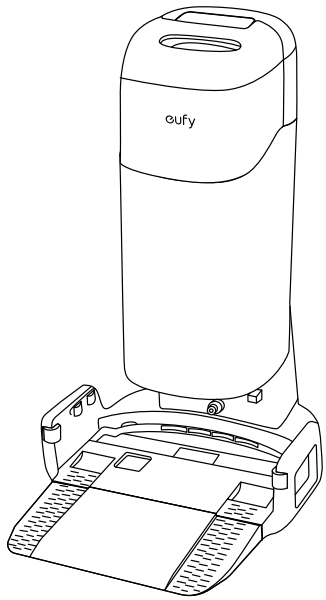	Dimensions	387 × 476 × 670 mm
	Weight	9.4 kg (20.72 lbs)
	Voltage	US/JP/TW Version: 100-120 V EU/UK/AU Version: 220-240 V
	Power (Dry and Charge)	330 W MAX
	Power (Dust Collection)	650 W
	Clean Water Tank	3 L
	Dirty Water Tank	2 L
	Disposable Dust Bag Capacity	2.5 L

- The S2 Pro Base Station features a warm air drying function. When the ambient temperature is above 35 °C, the RoboVac will charge first; room-temperature air drying will be used until the RoboVac is fully charged.
- As voltages vary across different countries and regions, we recommend purchasing the machine version specific to your location to avoid potential safety hazards and equipment damage.

10. Customer Service

For video tutorials, FAQs, warranty policies, and more information:

- Website: www.eufy.com/support
- Email: support@eufy.com

11. Other Information

Network Configuration Instructions

Network Configuration Process:

By default, the device is configured via BLE (Bluetooth Low Energy) through the mobile app. If BLE configuration fails, a button to try another configuration method (AP mode) will appear.

1. BLE (Bluetooth Low Energy) Configuration:

Trigger Condition:

Activate Bluetooth network configuration by pressing and holding both the recharge button and the start / pause button on the device for 3 seconds.

Status Description:

When the device is not yet connected to a network, it will automatically enable BLE broadcasting and activate BLE services to provide Bluetooth-based network configuration.

2. AP (Access Point) Configuration:

Trigger Condition:

Activate AP network configuration by pressing and holding both the recharge button and the start / pause button on the device for 3 seconds.

Status Description:

When the device is not yet connected to a network, it will broadcast an open (no password) and visible AP hotspot to provide network configuration via AP mode.

The device will:

- Listen for network configuration requests on TCP port 9668.

Note:

During the BLE and AP configuration processes, please ensure your network environment is stable and follow the instructions to complete the setup. If you encounter any issues, you can press and hold both the recharge button and the start / pause button again to restart the configuration process.

IMPORTANT SAFETY INSTRUCTIONS

When using an electrical appliance, basic precautions should always be followed, including the following:

READ ALL INSTRUCTIONS BEFORE USING THIS APPLIANCE

WARNING

To reduce the risk of fire, electric shock, or injury:

1. Do not leave this appliance when plugged in. Unplug from outlet when not in use and before servicing.
2. WARNING - To Reduce The Risk Of Electric Shock - Do not use outdoors or on wet surfaces.
3. Do not allow to be used as a toy. Close attention is necessary when used by or near children.
4. Use only as described in this manual. Use only manufacturer's recommended attachments.
5. Do not use with a damaged cord or plug. If this appliance is not working as it should, has been dropped, damaged, left outdoors, or dropped into water, return it to a service center.
6. Do not pull or carry by the cord, use the cord as a handle, close a door on the cord, or pull the cord around sharp edges or corners. Do not run appliance over the cord. Keep the cord away from heated surfaces.
7. Do not unplug by pulling on the cord. To unplug, grasp the plug, not the cord.
8. Do not handle the plug or appliance with wet hands.
9. Do not put any object into openings. Do not use with any opening blocked (including the electrolyser aperture); keep free of dust, lint, hair, and anything that may reduce air flow.
10. Keep hair, loose clothing, fingers, and all parts of body away from openings and moving parts.
11. Before using this device, pick up objects like clothing and loose paper. Lift up cords for blinds or curtains. Move power cords and sharp, pointed, or fragile objects out of the way. If this device

passes over a power cord and drags it, an object could be pulled off a table or shelf.

12. Turn off all controls before unplugging.
13. Use extra care when cleaning on stairs.
14. Do not use to pick up flammable or combustible liquids, such as gasoline, or use in areas where they may be present.
15. Connect to a properly grounded outlet only. See Grounding Instructions.
16. Do not pick up anything that is burning or smoking, such as cigarettes, matches, or hot ashes.
17. Do not use without dust bag, water tank and filters in place.
18. Unplug from outlet before filling, rinsing, or cleaning. Do not fill above the filled level mark.
19. This appliance is intended for household and indoor use.
20. Read all safety warnings and instructions. Failure to follow the warnings and instructions may result in electric shock, fire or serious injury.
21. Prevent unintentional starting. Ensure the switch is in the off-position before picking up or carrying this appliance. Carrying this appliance with your finger on the switch or energizing appliance that has the switch on invites accidents.
22. This appliance contains batteries that are only replaceable by skilled persons.
23. Recharge only with the charger specified by the manufacturer. A charger that is suitable for one type of battery pack may create a risk of fire when used with another battery pack.
24. Use appliances only with specifically designated battery packs. Use of any other battery packs may create a risk of injury and fire.
25. When the battery pack is not in use, keep it away from other metal objects, like paper clips, coins, keys, nails, screws or other small metal objects, that can make a connection from one terminal to another. Shorting the battery terminals together may cause burns or a fire.
26. Under abusive conditions, liquid may be ejected from the battery; avoid contact. If contact accidentally occurs, flush with water. If liquid contacts eyes, seek additional medical help. Liquid ejected from the battery may cause irritation or burns.
27. Do not use a battery pack or appliance that is damaged or modified. Damaged or modified batteries may exhibit unpredictable behavior resulting in fire, explosion or risk of injury.
28. Do not expose a battery pack or appliance to fire or excessive temperature. Exposure to fire or temperature above 130°C/266°F may cause explosion.
29. Follow all charging instructions and do not charge this appliance outside of the temperature range specified in the instructions. Charging improperly or at temperatures outside of the specified range may damage the battery and increase the risk of fire.
30. Have servicing performed by a qualified repair person using only identical replacement parts. This will ensure that the safety of the product is maintained.
31. Do not modify or attempt to repair this appliance except as indicated in the instructions for use and care.
32. Charging, using and storing this appliance should be within a room temperature range of 5-40°C / 41-104°F.
33. Place the cords from other appliances out of the area to be cleaned. Do not allow the appliance to operate in an area with an unattended infant/child or where someone is lying on the floor. Do not operate the appliance in an area where there are lit candles or fragile objects on the floor to be cleaned. Do not operate the appliance in a room that has lit candles on furniture that the appliance may accidentally hit or bump into. Do not allow children to sit on the appliance. Do not use the appliance on a wet surface. Be aware of the potential trip hazard in the area an automatic floor cleaner is being operated.
34. (For US/CA) GROUNDING INSTRUCTIONS

    This appliance must be grounded. If it should malfunction or breakdown, grounding provides a path of least resistance for electric current to reduce the risk of electric shock. This appliance is equipped with a cord having an equipment-grounding conductor and grounding plug. The plug must be inserted into an appropriate outlet that is properly installed and grounded in accordance with all local codes and ordinances. WARNING: Improper connection of the equipment-grounding conductor can result in a risk of electric shock. Check with a qualified electrician or service person if you are in doubt as to whether the outlet is properly grounded. Do not modify the plug provided with the appliance if it will not fit the outlet. Have a proper outlet installed by a qualified electrician. This appliance should be used on a nominal 120-V circuit and has a grounding plug as illustrated below. Make sure that the appliance is connected to an outlet that matches the plug. No adaptor should be used with this appliance.

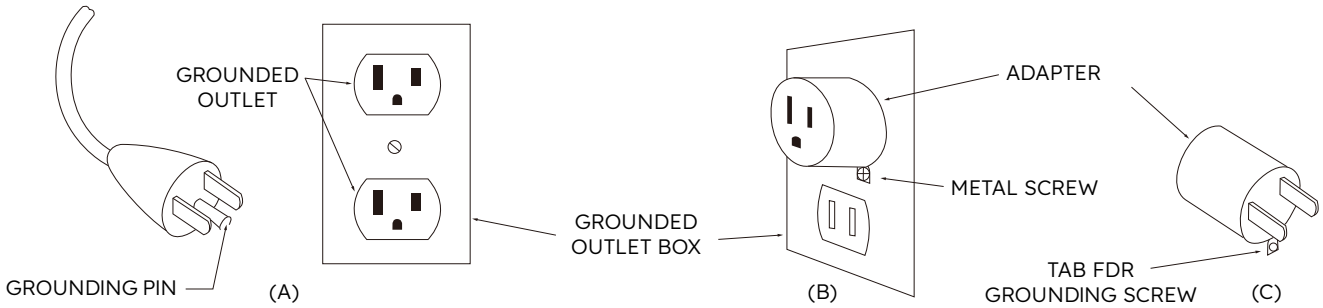

35. This appliance is not intended for use by persons (including children) with reduced physical, sensory or mental capabilities, or lack of experience and knowledge, unless they have been given supervision or instruction concerning use of this appliance by a person responsible for their safety. Children should be supervised to ensure that they do not play with this appliance.
36. This appliance can be used by children aged from 8 years and above and persons with reduced physical, sensory or mental capabilities or lack of experience and knowledge if they have been given supervision or instruction concerning use of this appliance in a safe way and understand the hazards involved. Children shall not play with this appliance. Cleaning and user maintenance shall not be made by children without supervision.
37. (Optional) Only use the new hose-sets supplied with the appliance and the old ones should not be reused. The maximum inlet water pressure is 0.4 Mpa, and the minimum inlet water pressure is 0.1 Mpa.
38. This appliance is only to be used with the charging station provided with this appliance. WARNING: For the purposes of recharging the battery, only use the T210T charging station provided with this appliance.
39. Do not use non-rechargeable batteries. Replace only with the battery model: T291T-1A.
40. Before removing the battery, turn off this appliance. To remove the battery, first unscrew the screws on the bottom, then remove the back cover. Disconnect the battery connector to remove the battery. The connector of the battery only fits one way. If the connector does not fit during the connection, reverse the connector. The used battery should be placed in a sealed plastic bag and disposed of safely according to local environmental regulations.

    CAUTION: In order to avoid a hazard due to inadvertent resetting of the thermal cut-out, this appliance must not be supplied through an external switching device, such as a timer, or connected to a circuit that is regularly switched on and off by the utility.
41. The plug must be removed from the socket-outlet after use and before cleaning or maintaining this appliance.
42. A hazard may occur if this appliance runs over the supply cord.
43. The medium used in ozone disinfection is 100% tap water. The substances produced during ozone disinfection are ozone and hydrogen under a safe dose, and the ozone will be decomposed into oxygen in about half an hour.
44. The charging station is only intended for use with this unit T210T. Do not use the charging station with other units or recharge non-rechargeable batteries.
45. : For household and indoor use only.
46. Do not use this appliance on high-pile rugs or animal leather products.
47. Only use the floor cleaner designated by eufy. We are not responsible for any damage and injury caused by unauthorized floor cleaners.
48. Method of entering standby mode: When charging, quickly hit the red reset button on the robot three times. When the base station screen turns off, it indicates that the device has entered low power consumption mode.
49. **Warning:** Eye damage may result from directly viewing the light produced by the lamp in this apparatus. Products having lamps intended for replacement only by qualified service personnel.
50. **Warning:** This appliance is provided with an interlock to reduce the risk of excessive ultraviolet radiation. Do not defeat its purpose or attempt to service.
51. **Warning:** This appliance contains a UV emitter. Do not stare at the light source.

SAVE THESE INSTRUCTIONS

Notice



This symbol on the device or its packaging indicates:

Do not dispose of electrical appliances as unsorted municipal waste; use separate collection facilities. Contact your local authorities for information regarding the collection systems available. If electrical appliances are disposed of in landfills or dumps, hazardous substances can leak into the groundwater and get into the food chain, damaging your health and well-being. When replacing old appliances with new ones, the retailer is legally obliged to take back your old appliance for disposal free of charge.

FCC Statement

This device complies with Part 15 of the FCC Rules. Operation is subject to the following two conditions: (1) This device may not cause harmful interference, and (2) this device must accept any interference received, including interference that may cause undesired operation.

Warning: Changes or modifications not expressly approved by the party responsible for compliance could void the user's authority to operate the equipment.

Note: This equipment has been tested and found to comply with the limits for a Class B digital device, pursuant to Part 15 of the FCC Rules. These limits are designed to provide reasonable protection against harmful interference in a residential installation.

This equipment generates, uses, and can radiate radio frequency energy and, if not installed and used in accordance with the instructions, may cause harmful interference to radio communications. However, there is no guarantee that interference will not occur in a particular installation. If this equipment does cause harmful interference to radio or television reception, which can be determined by turning the equipment off and on, the user is encouraged to try to correct the interference by one or more of the following measures: (1) Reorient or relocate the receiving antenna. (2) Increase the separation between the equipment and receiver. (3) Connect the equipment into an outlet on a circuit different from that to which the receiver is connected. (4) Consult the dealer or an experienced radio / TV technician for help.

This equipment must be installed and operated in accordance with provided instructions and the antenna(s) used for this transmitter must be installed to provide a separation distance of at least 20cm from all persons and must not be collocated or operating in conjunction with any other antenna or transmitter.

The following importer is the responsible party (for FCC matters only).

Company Name: POWER MOBILE LIFE, LLC

Address: 10800 NE 8TH ST #900, BELLEVUE, WA, 98004, UNITED STATES

Telephone: 1-800-988-7973

ISED Compliance Statement

This device contains licence-exempt transmitter(s)/receiver(s) that comply with Innovation, Science and Economic Development Canada's licence-exempt RSS(s). Operation is subject to the following two conditions:

1. This device may not cause interference.

2. This device must accept any interference, including interference that may cause undesired operation of the device.

This equipment must be installed and operated in accordance with provided instructions and the antenna(s) used for this transmitter must be installed to provide a separation distance of at least 20 cm from all persons and must not be collocated or operating in conjunction with any other antenna or transmitter.

EU Declaration of Conformity

This product complies with the radio interference requirements of the European Community. Hereby, Anker Innovations Limited declares that the radio equipment type T210T is in compliance with Directive 2014/53/EU. The full text of the EU declaration of conformity is available at the following website: https://support.eufy.com/s/articleRecommend?type=DownLoad.

Frequency band: 2.4G band (2.4000GHz - 2.4835GHz)

* Output power of the Wi-Fi module is less than 20dBm.

GB Declaration of Conformity

Hereby, Anker Innovations Limited declares that the product type T210T is in compliance with Radio Equipment Regulations 2017 and The Restriction of the Use of Certain Hazardous Substances in Electrical and Electronic Equipment Regulations 2012. The full text of the GB declaration of conformity is available at the following website:
https://support.eufy.com/s/articleRecommend?type=DownLoad.

The following importer is the responsible party for EU and UK matters.
ANKER TECHNOLOGY (UK) LTD
39 Clarendon Road, Watford, Hertfordshire, England, WD17 1JA, United Kingdom

Anker Innovations (Malta) CO.LTD
Villa Malitah, Mediterranean Street, The Village St. Julian's STJ 1870 Malta.

Manufacturer:
Anker Innovations Limited
Unit 56, 8th Floor, Tower 2, Admiralty Centre, 18 Harcourt Road, Hong Kong

UK PSTI Statement

Hereby, Anker Innovations Limited declares that this device is in compliance with The Product Security and Telecommunications Infrastructure (Security Requirements for Relevant Connectable Products) Regulations 2023. For the Statement of Compliance, visit the website:
https://passport.eufy.com/uk/psti-related.

Australian Smart Device Security Statement

Hereby, Anker Innovations Limited declares that this device is in compliance with the Cyber Security (Security Standards for Smart Devices) Rules 2025. For the Statement of Compliance, visit the website:
https://passport.eufy.com/au/ssfsd-related.

Trademark Notice

- Amazon, Echo, Alexa and all related logos are trademarks of Amazon.com, Inc. or its affiliates.
- Apple and the Apple logo are trademarks of Apple Inc., registered in the U.S. and other countries. App Store is a service mark of Apple Inc., registered in the U.S. and other countries.
- Google Play and the Google Play logo are trademarks of Google Inc.
- Google Home is a trademark of Google Inc.

Laser Safety Information

The laser sensor in this product meets the IEC 60825-1: 2014 and EN 60825-1:2014/A11:2021 Standard for Class 1 laser products. Please avoid direct eye contact with it during use.
CLASS 1 LASER PRODUCT
CONSUMER LASER PRODUCT EN 50689:2021