1. About Your Device
1.1 What's in the Box
1.2 Overview
1.3 Button Controls
1.4 LED Indication
2. Preparing Your Device
2.1 Install the Omni Station
2.2 Charge Your RoboVac
2.3 Download the App
2.4 Reset the Wi-Fi Connection
3. Using Your Device
3.1 Important Tips Before Use
3.2 Mapping
3.3 Editing Map
3.4 Cleaning
3.5 Increase Suction Power
3.6 Schedule Cleaning
3.7 Using the Mopping System
4. Using Your Device with Apple Siri / Amazon Alexa / Google Assistant and more
5. Enabling / Disabling Child Safety Lock
6. Cleaning and Maintenance
6.1 Clean the Dustbin and Filter
6.2 Clean the Dirty Water Reservoir
6.3 Replace the Roller Mop
6.4 Clean the DuoSpiral™ Brushes
6.5 Clean the Side Brushes
6.6 Replace the Dust Bag
6.7 Clean the Dirty Water Tank
6.8 Clean the Filter Tray
6.9 Clean the Sensors, Camera, and Charging Contacts
7. Troubleshooting
8. Specifications
9. Customer Service
10. Other Information
Network Configuration Instructions
Important Safety Instructions

💡 The App interface is for reference only. Actual screens may vary.

1. About Your Device

1.1 What's in the Box

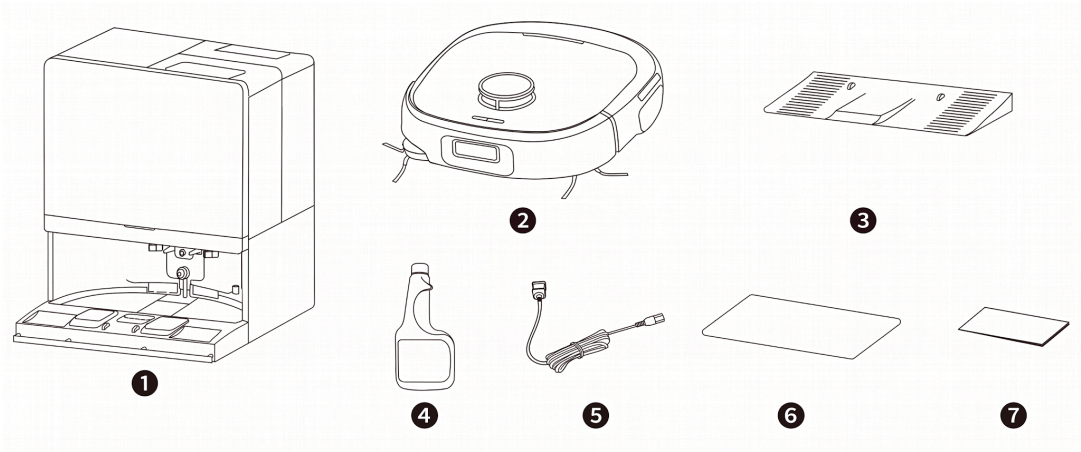

1. Omni Station with Water Tanks
2. Robot Vacuum Cleaner (RoboVac)
3. Detachable Base
4. Floor Cleaning Solution
5. Power Cord
6. Quick Start Guide
7. Safety Sheet

1.2 Overview

RoboVac

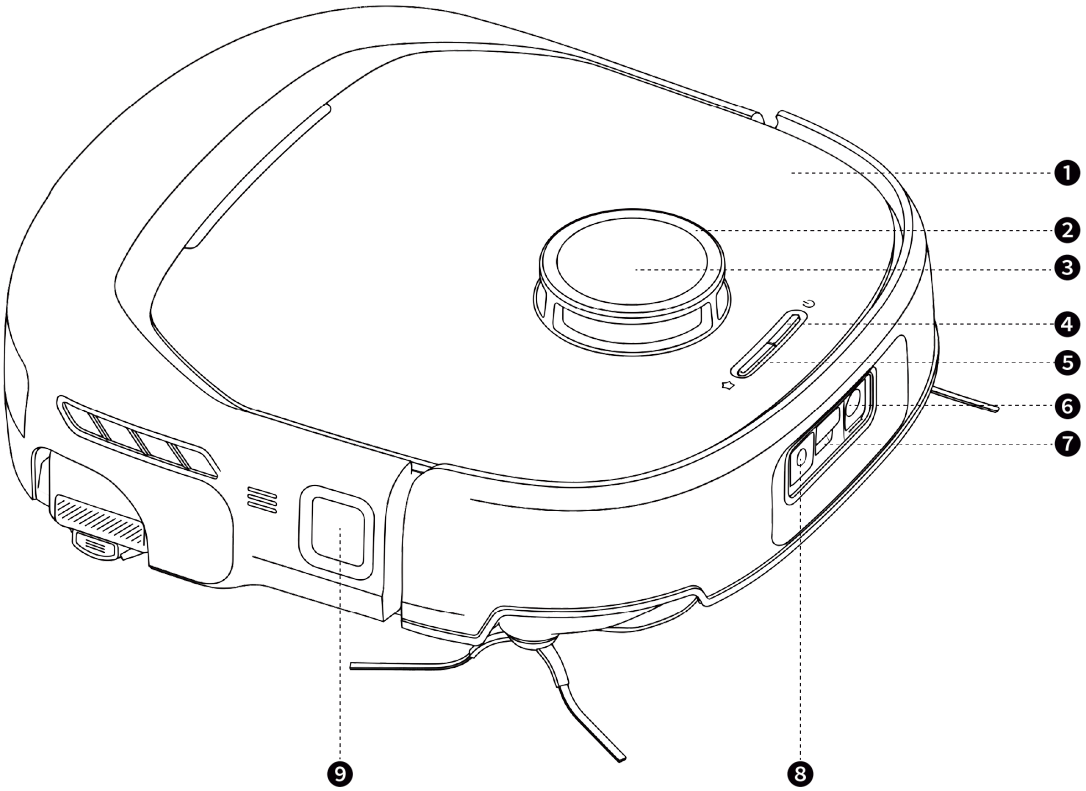

1. Robot Cover
2. LED Indicator
3. Navigation LiDAR
4. Power Button
5. Recharge Button
6. RGB Camera
7. Line Laser Sensors
8. LED Light
9. Wall Sensor

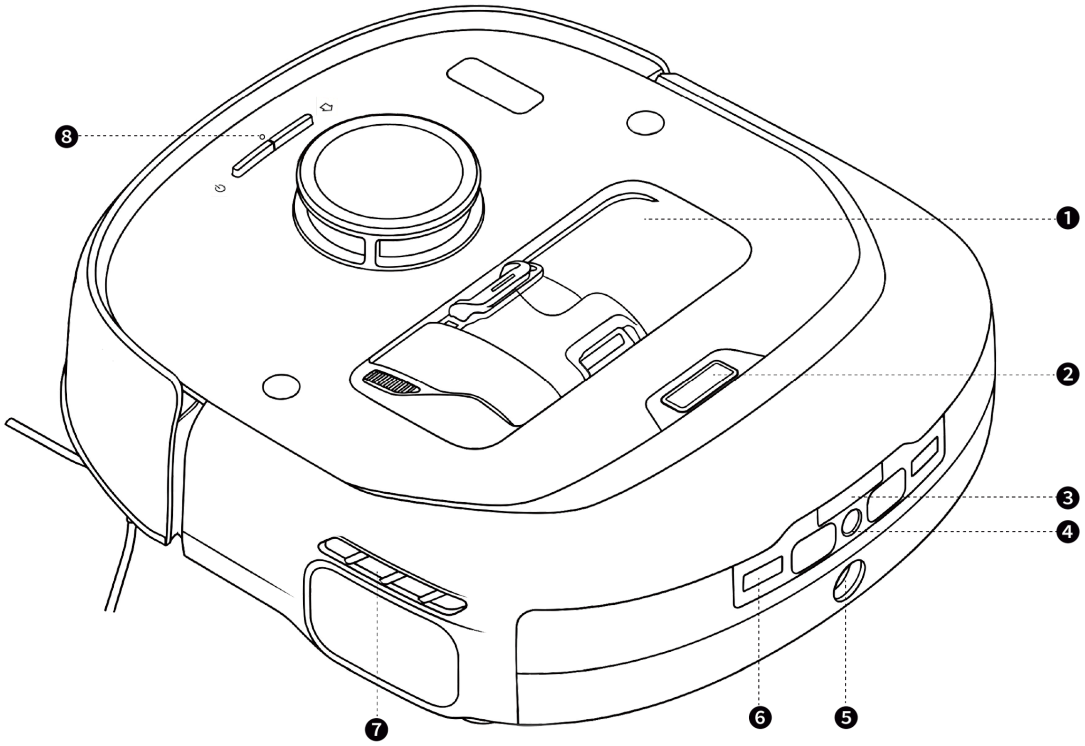

1. Dust Bin
2. Water Reservoir Release Button
3. Recharge Sensor
4. Water Injection Port
5. Dirty Water Collection Port
6. Charging Contact Pins (× 2)
7. Air Outlet
8. Reset Hole

Dust Bin

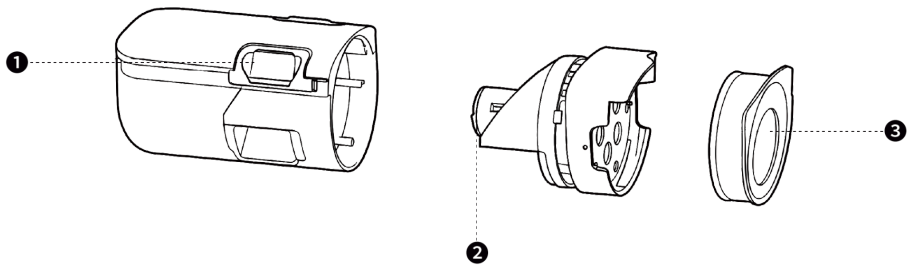

1. Dust Bin Handle
2. Metal Filter
3. High-Performance Filter

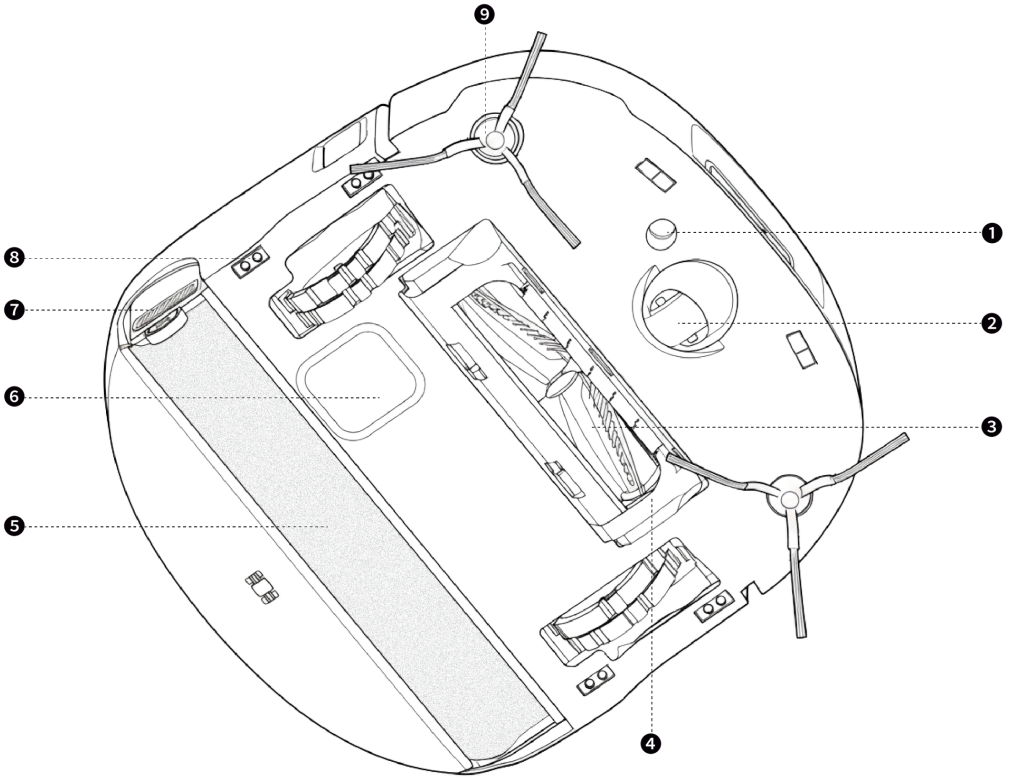

1. Carpet Detection Sensor
2. Swivel Wheel
3. DuoSpiral™ Brushes

4. Brush Guard
5. Roller Mop
6. Dust Collection Port
7. Roller Mop Release Button
8. Drop Sensors (× 6)
9. Side Brushes (× 2)

Omni Station

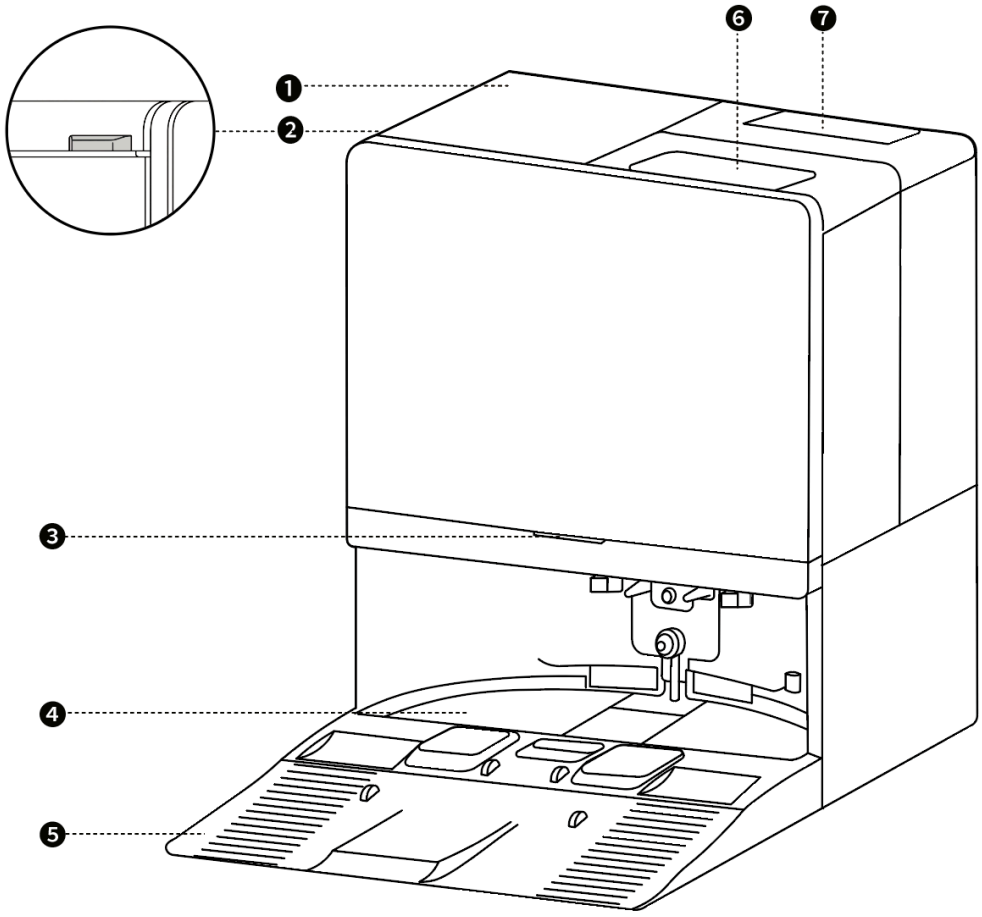

1. Dust Bag Compartment
2. Lift Tab
3. LED Indicator
4. Filter Tray
5. Detachable Base
6. Clean Water Tank
7. Dirty Water Tank

1.3 Button Controls

	• Press and hold for 3 seconds: Power on / off • Press: Pause / resume the current task
	• Press **during cleaning**: Pause the current task • Press **when paused**: Return RoboVac to the Omni Station
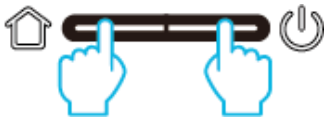	• Press and hold both for 3 seconds: Reset Wi-Fi connection • Press and hold both for 10 seconds: Factory reset

1.4 LED Indication

RoboVac

Light	Indication
Solid white	Cleaning / Fully charged
Breathing white	Charging
Solid red	Low battery
Flashing red	Error

Omni Station

Light	Indication
Solid white	Collecting dust / Washing / Drying mop / OTA
Solid red	Error

2. Preparing Your Device

2.1 Install the Omni Station

1. Install the detachable base by pressing down firmly on both sides.

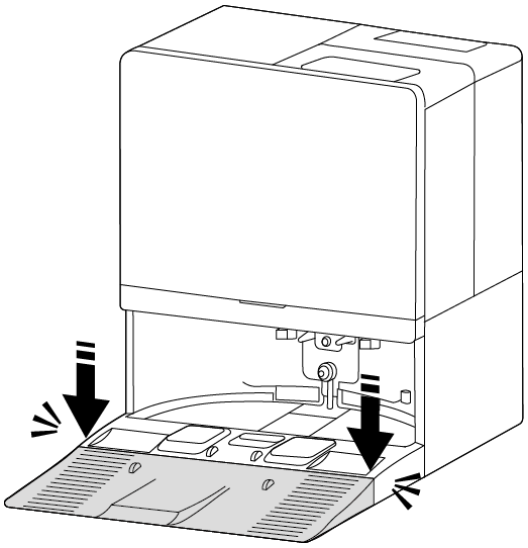

2. Place the Omni Station in a location with a strong Wi-Fi signal and ensure the RoboVac can easily access it. Make sure there is at least 1.5 meters (4.9 feet) of clearance in front and 0.5 meters (1.6 feet) on both sides on a hard, open floor. It is recommended to place it against a wall and on a hard, level surface.

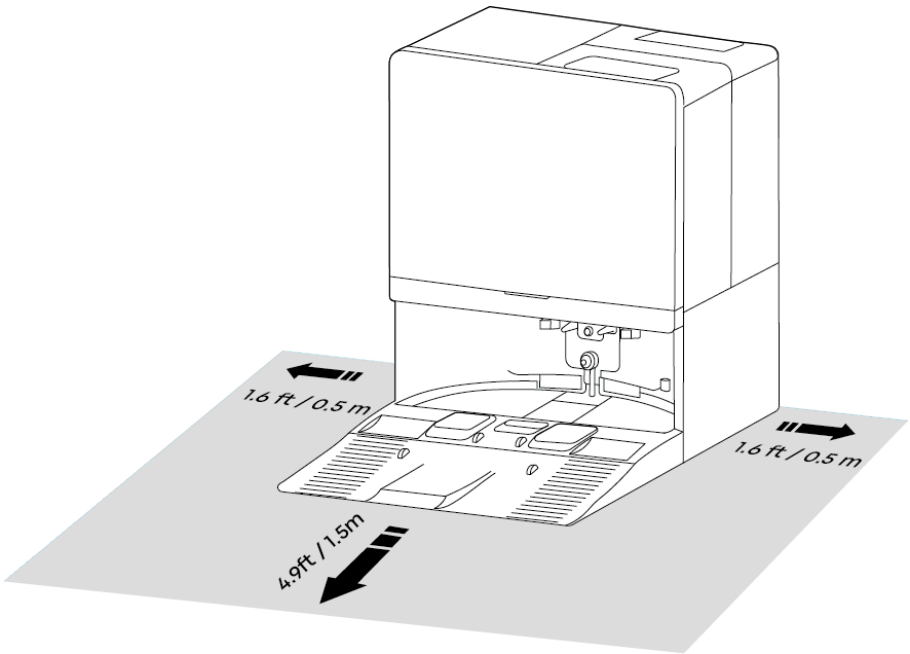

3. Connect the power cord to the Omni Station.
   When the Omni Station connects to AC power, the LED indicator on the Omni Station is steady white.

💡 Always keep the Omni Station plugged in to ensure the connection between the RoboVac and the Omni Station is successful; otherwise, the RoboVac will not automatically return to the station.

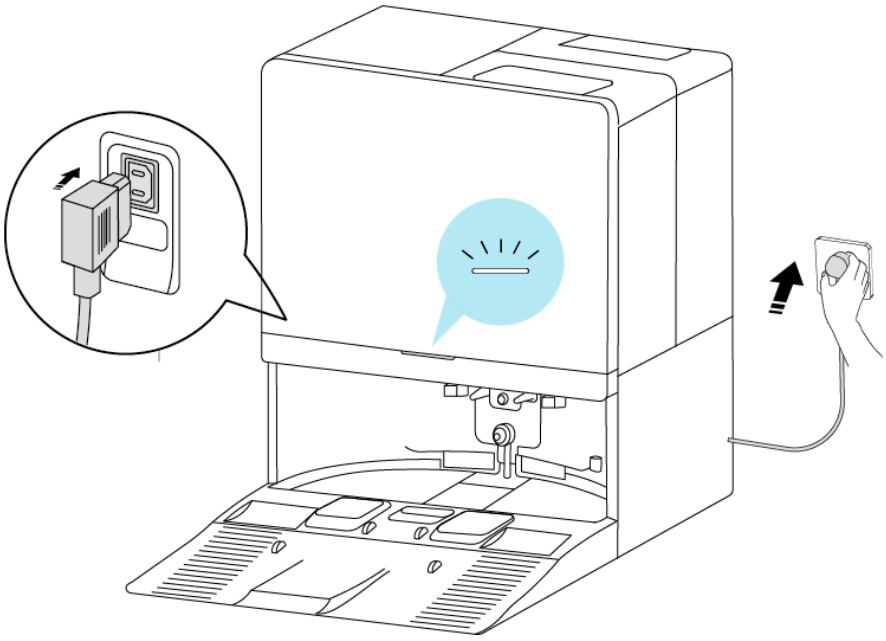

4. Take out the clean water tank. Add clean water until it reaches the MAX water line.

⚠️ Do not add hot water into the tank to avoid shortening its service life.

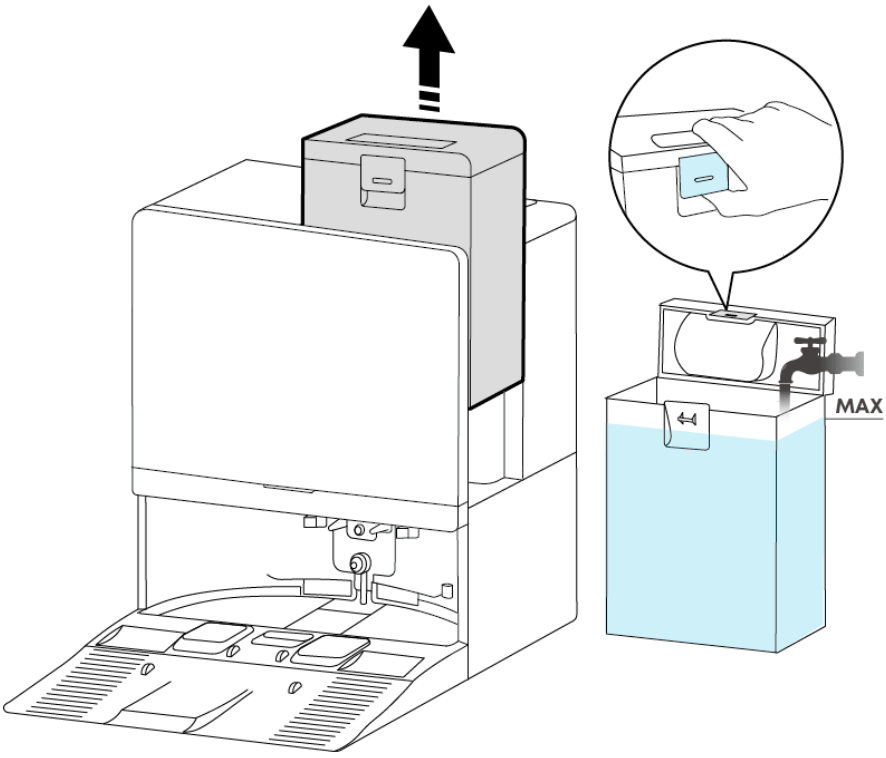

> 💡 The white granules in the clean water tank are descalers.

5. Take out the cleaning solution compartment, and fill it with the provided cleaning solution.

> ⚠️ Only use the cleaning solution designated by eufy, otherwise it may affect the cleaning effect and damage the device.

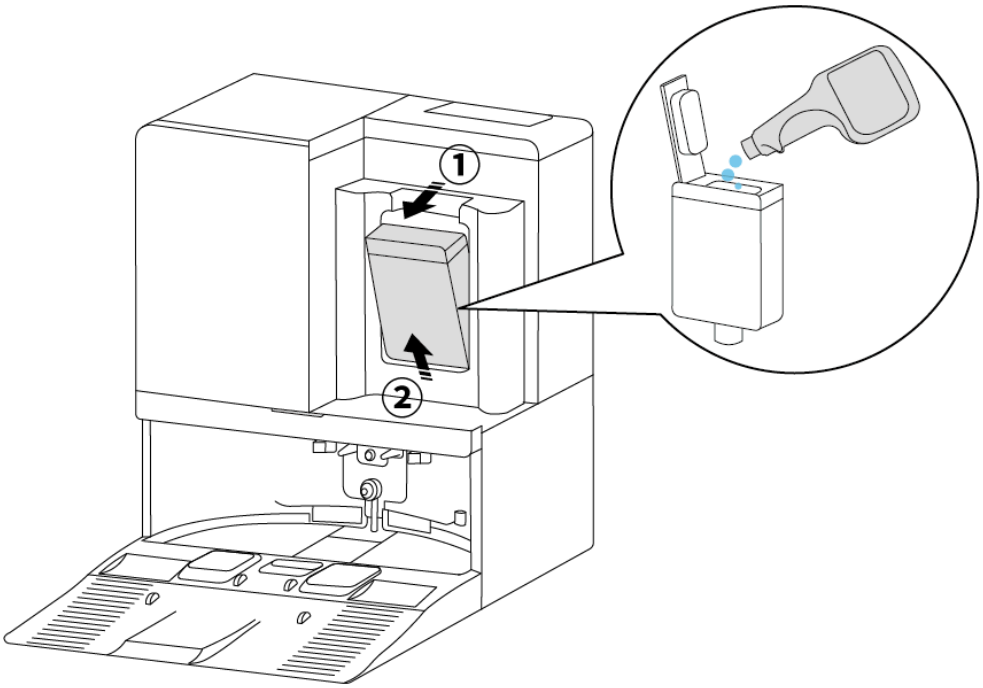

6. Insert the bottle into the cleaner slot. Make sure the floor cleaner is securely installed.

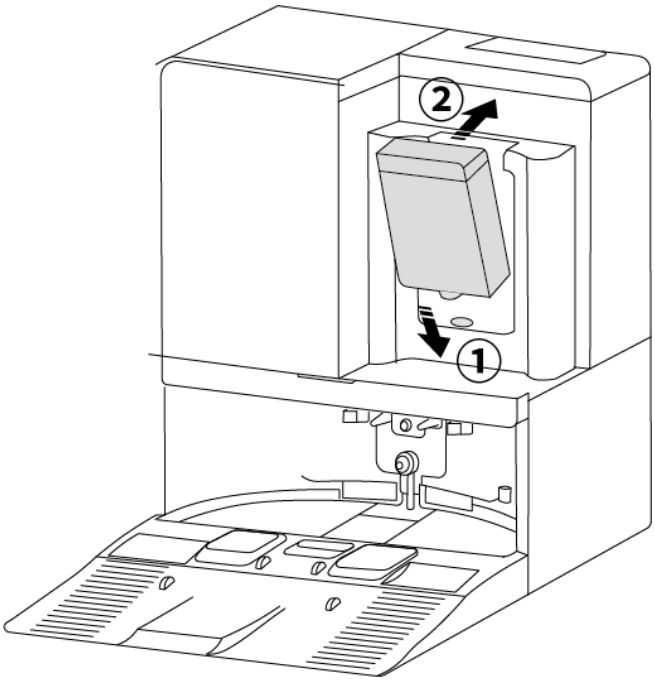

7. Make sure the clean water tank cap is properly closed, and the latch clicks into place. Then, install the clean water tank.

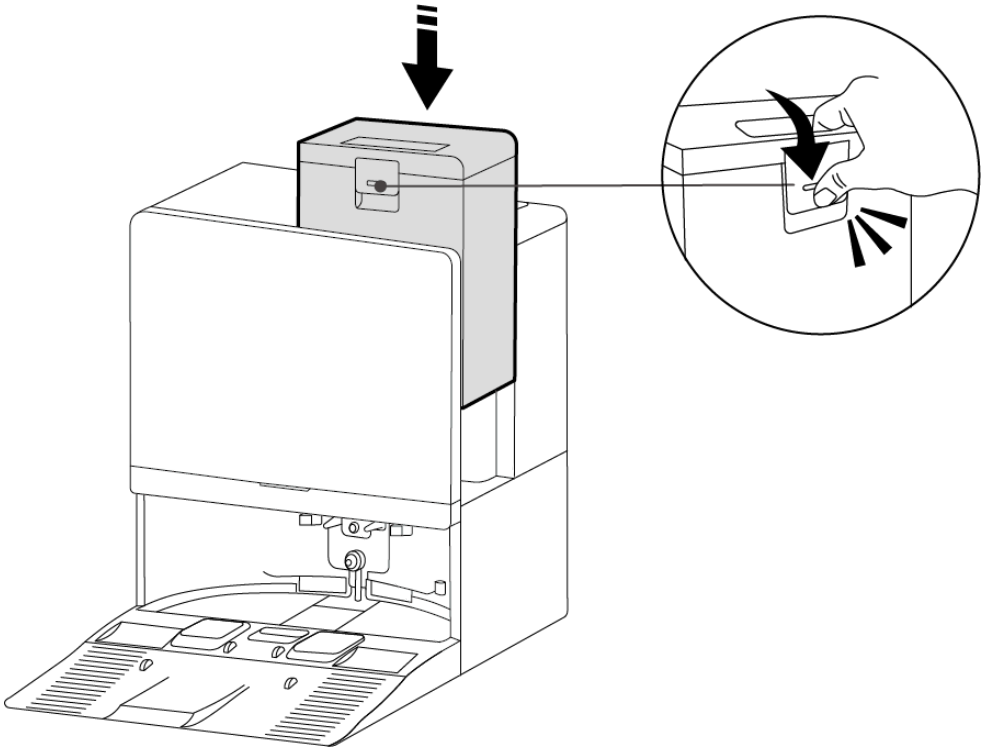

2.2 Charge Your RoboVac

1. Remove the privacy sticker and the foam blocks from the RoboVac.

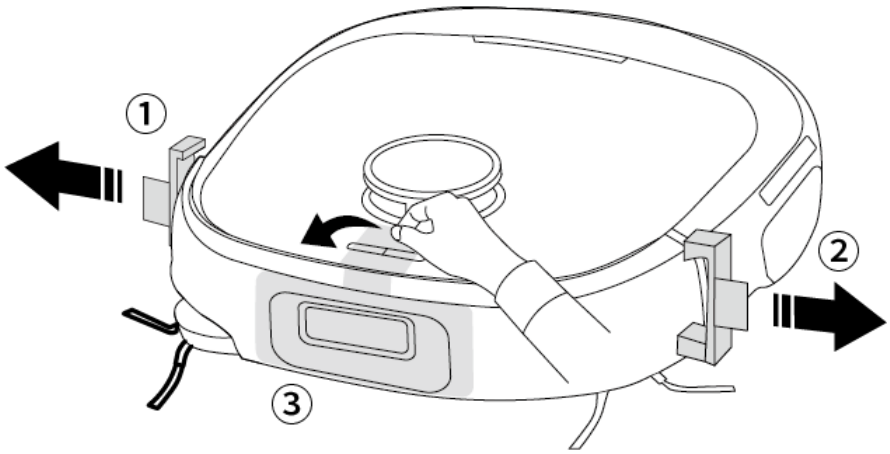

2. Attach the RoboVac to the Omni Station. The RoboVac will power on and start charging automatically.

> 💡 The dirty water tank of the RoboVac and the Omni Station's water tanks may contain remaining water from factory acceptance tests. Rest assured, it's safe to use.

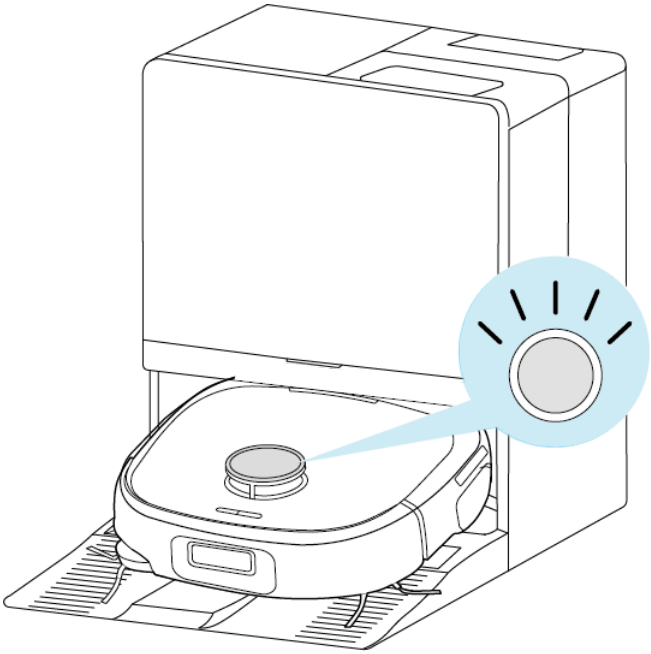

2.3 Download the App

Before you start, ensure:

- Your smartphone runs iOS 11.0 or later, or Android 8.0 or later.
- Your Wi-Fi router broadcasts a 2.4GHz signal.

1. Download the app from the App Store (iOS) or Google Play (Android).
2. Open the app and create an account.
3. Tap **+** > **Add Device** > **Clean** > **Robot Vacuum-E Series** > **Omni E35**.

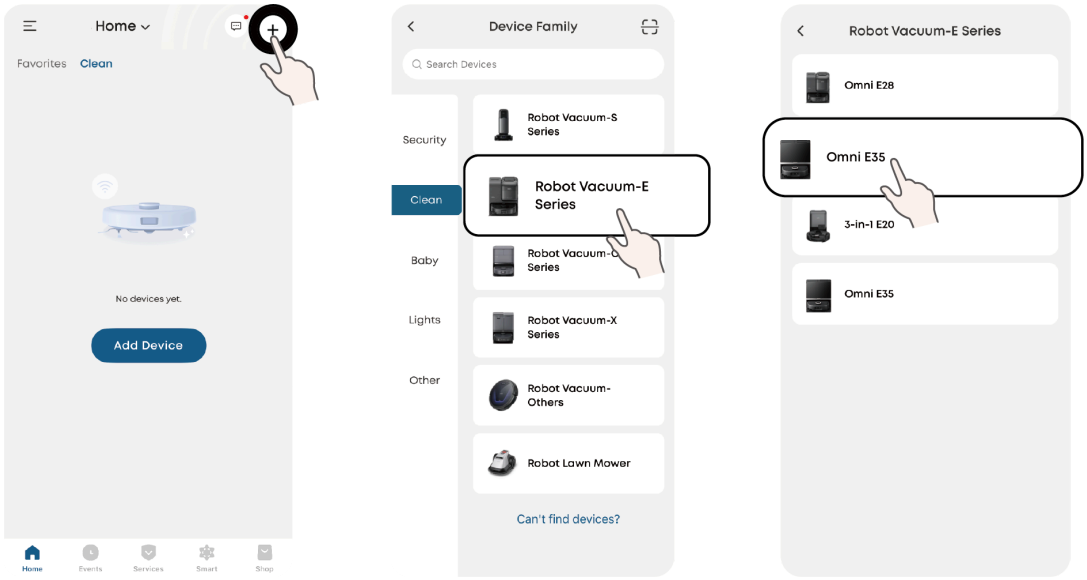

4. Follow the on-screen instructions to connect to your Wi-Fi network.

Once connected, control the robot via the app to access all features: cleaning modes, suction power, scheduling, map management, No-Go zones, notifications, and more.

2.4 Reset the Wi-Fi Connection

If you experience connection issues, reset the Wi-Fi:

Press and hold the **Power** and **Recharge** buttons simultaneously for 3 seconds until you hear a voice prompt. Follow the in-app instructions to reconnect.



3. Using Your Device

3.1 Important Tips Before Use

A. Remove power cords and small objects from the floor that may entangle RoboVac.

B. It is strongly recommended to place physical barriers or set a “No-Go” zone via the eufy app in front of fireplaces and certain areas (i.e. stairway) that may cause damage to RoboVac if entered.

C. Avoid vacuuming large amounts of water as it will potentially damage the device.

D. Do not use the RoboVac on floors with standing water, in wet areas such as bathrooms or laundry rooms, or on floors that have been heavily flooded. The RoboVac is designed for routine damp mopping on hard floors only; prolonged exposure to excessive moisture may damage the device.

E. Do not immerse the RoboVac or the Omni Station in water or any other liquid. Do not rinse the main body of the RoboVac or the Omni Station under running water. Only the detachable parts listed in Chapter 6 are washable. Water entering the internal components may cause electrical damage and void the warranty.

F. RoboVac may climb on top of objects less than 1.18 in (30 mm) in height. Remove these objects if possible.

G. Anti-drop sensors will prevent RoboVac from tumbling down stairs and steep drops in most cases. Sensors are less effective if dirty or used on carpeted / reflective floors. It is recommended to regularly wipe the sensors and set no-go zones, especially around stairs or any areas where the robot might fall.

3.2 Mapping

This feature is designed to help your RoboVac efficiently learn the layout of your home, ensuring thorough and systematic cleaning. By creating a detailed floor plan, your RoboVac can navigate and clean with precision.

To maximize the efficiency and accuracy of the mapping process, please follow these steps:

- **Open All Doors:** Ensure all doors within the cleaning area are open. This allows the robot to access and map each room seamlessly.
- **Block Off Restricted Areas:** If there are specific zones you don't want the robot to enter, use physical barriers to block these areas. This can enhance mapping accuracy and prevent the robot from entering unwanted spaces. After the mapping is completed, you can remove physical barriers, and set up restricted areas in the app to prevent the robot from entering those areas.
- **Remove Obstacles:** Clear any objects, such as toys, cables, small furniture, or fringed carpets, that might obstruct paths or become entangled in its brushes. This helps RoboVac move freely and map the area without interruptions.
- **Do Not Move the Omni Station:** Once the floor plan is created, avoid relocating the Omni Station. RoboVac relies on the Omni Station as a reference point for navigation and mapping. Moving it may disrupt the accuracy of the floor plan.

To start the mapping process, tap **Start** in the app.

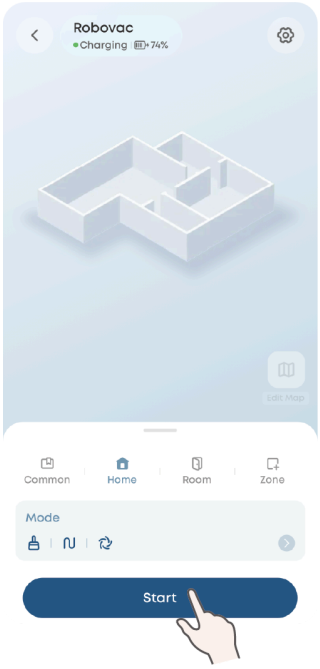

To add more maps or adjust mapping modes, tap the ⚙ icon > **Manage Map** to enter the map management page.

3.3 Editing Map

You can edit the map in the app to better match your home layout.

To enter the map editing page, tap **Edit Map**.

On this page, you can perform the following operations:

Room Management

- Merge: Merge two rooms into one.
- Divide: Divide one room into separate rooms.
- Rename: Rename a room.
- Map Expansion: Expand the map to include additional areas.

Map Elements

- No-Go Zone: Set areas where the robot is not allowed to enter.
- Carpets: Mark carpeted areas so the robot can apply the appropriate cleaning strategy.
- Furniture: Add furniture positions to help refine the map layout and cleaning path.
- Floor Material: Set different floor types, such as wood or tile, for more suitable cleaning settings.

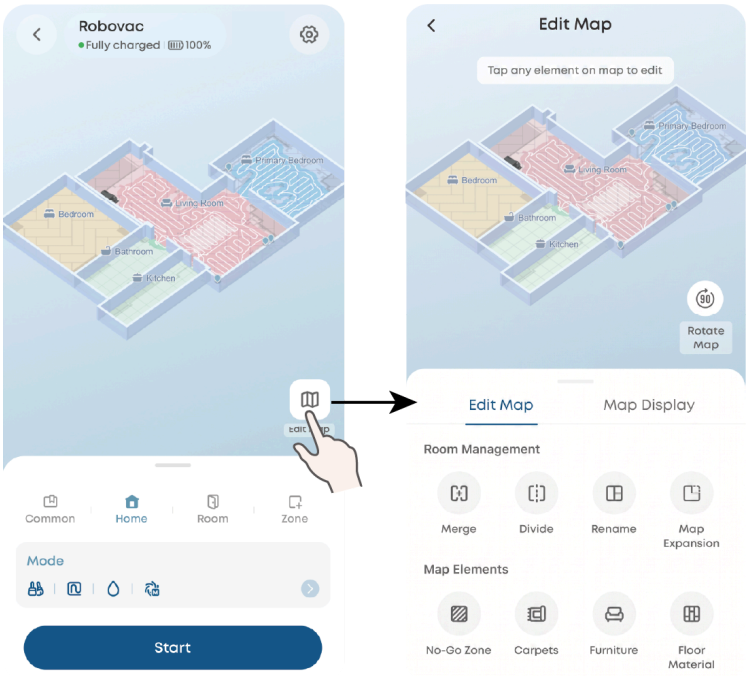

This feature is only designed for dividing the cleaning zones, not for isolating hazardous areas.

3.4 Cleaning

Start cleaning from the app or by pressing the Power button. The robot can vacuum and mop simultaneously, or vacuum only.

The app provides multiple cleaning modes for different cleaning tasks.

On the main cleaning page:

1. Select a mode.
2. Tap the **Mode** section to adjust the cleaning settings as needed.
3. Tap **Start**.

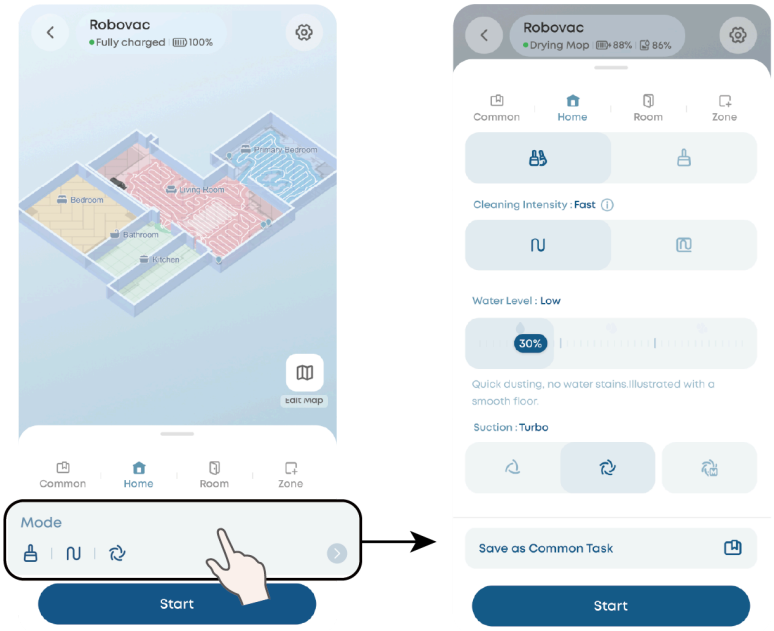

Home Mode

Use this mode to clean the entire mapped area.

The robot cleans edges first, then follows a **Z-shaped path** to clean the open floor area.

When cleaning is complete, the robot returns to the station automatically.

Room Mode

Use this mode to clean one or more selected rooms.

Tap the room on the map to select it, then tap **Start**.

The robot cleans only the selected room(s).

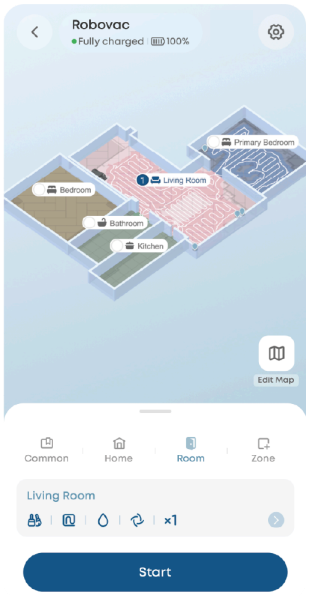

Zone Mode

Use this mode to clean a specific area.

Draw or select a zone on the map, then tap **Start**.

The robot cleans only the selected zone.



Common

Use this mode to start a saved cleaning task.

You can create a **Common task** in **Home**, **Room**, or **Zone** mode by saving the current cleaning settings.

After a task is saved, you can select it directly from the **Common** page and start cleaning without reconfiguring the settings.

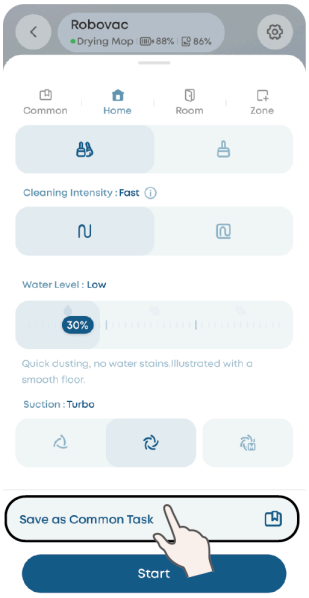

3.5 Increase Suction Power

Enable **BoostIQ™** to let the robot automatically increase suction power when it detects carpets.

Tap the ⚙ icon > **Cleaning Preference** to enable **BoostIQ™**.

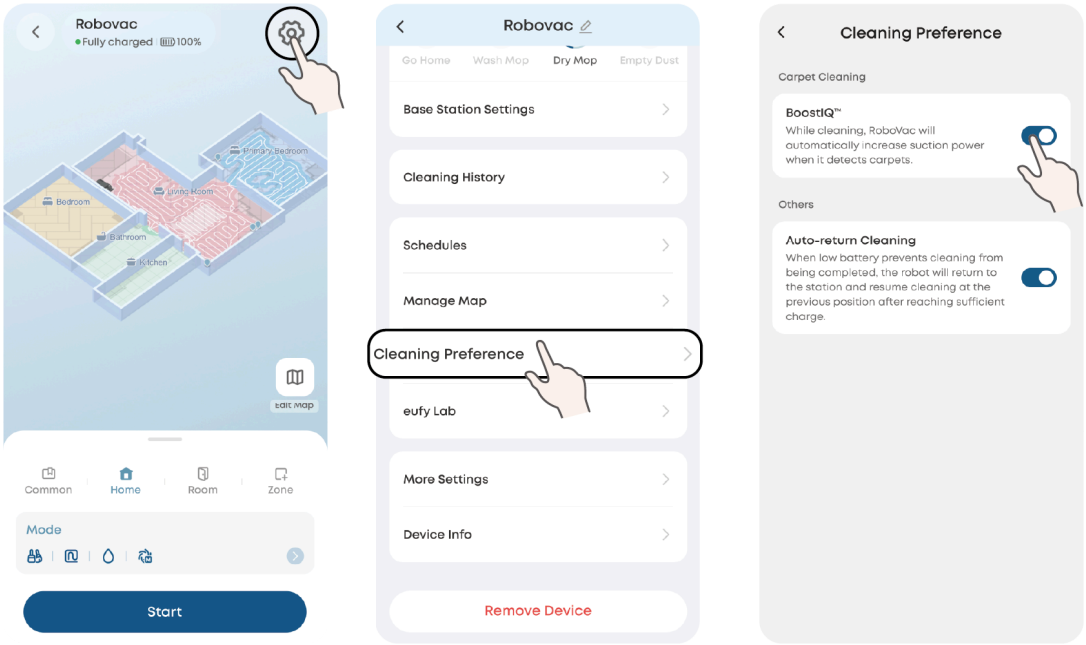

3.6 Schedule Cleaning

1. Tap the ⚙ icon > **Schedules** > **Add Schedule**.
2. Select days (Sunday–Saturday), start time, rooms, and cleaning mode.
3. Tap **Save**. The robot runs automatically at the scheduled time.

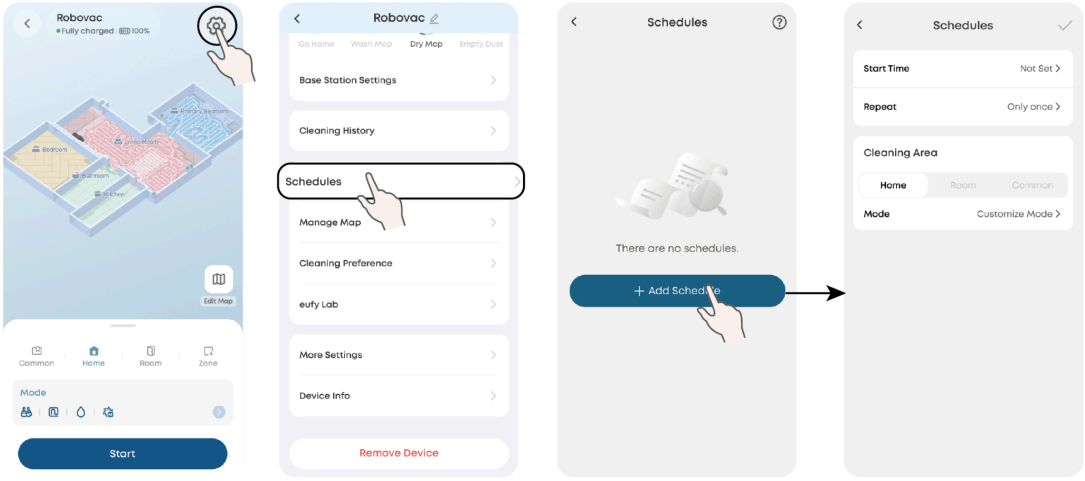

3.7 Using the Mopping System

During mopping, you can adjust water levels in the app.

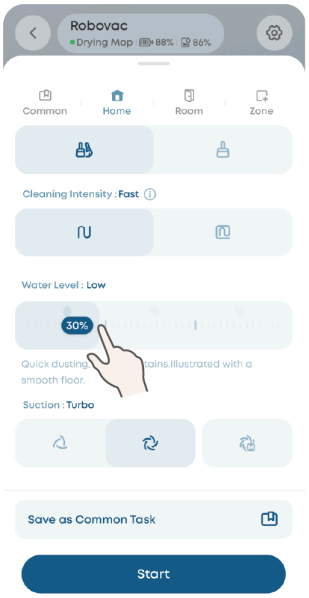

After cleaning, the station automatically washes and dries the roller mop at 55°C (131 °F). Drying takes approximately 3.5 to 7 hours, depending on the drying mode selected.

To adjust the mopping settings, tap the ⚙ icon > **Base Station Settings**.

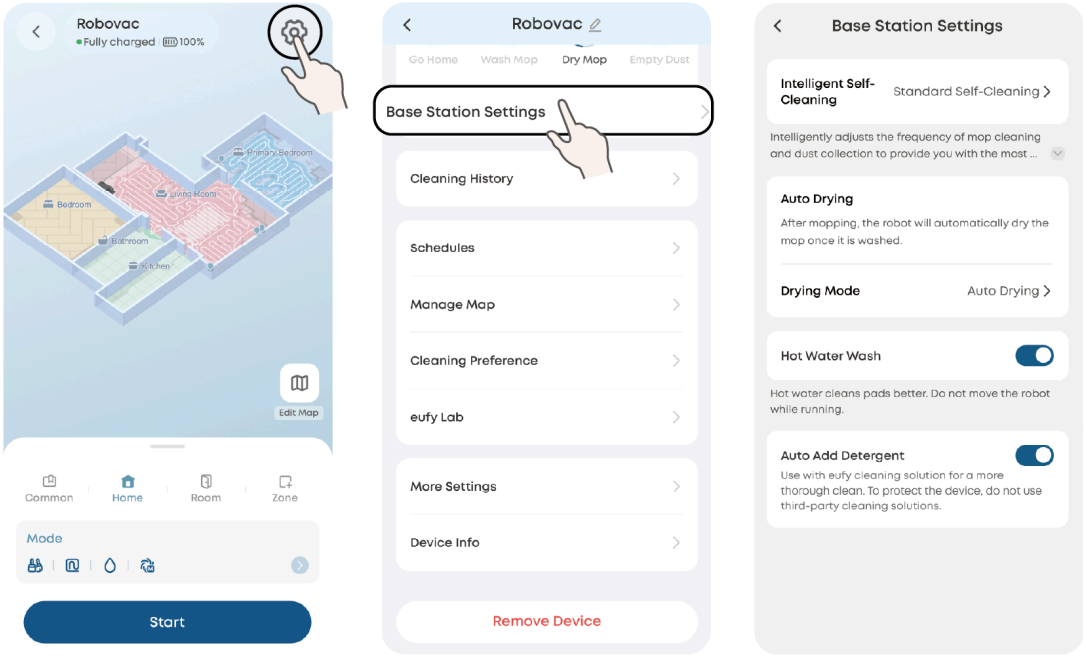

Empty and rinse the dirty water tank after each session to prevent mildew. See Chapter 6.

4. Using Your Device with Apple Siri / Amazon Alexa / Google Assistant and more

Before you start, ensure:

- The robot is docked and charged.
- The robot is connected to the eufy app.
- You have a Siri-enabled, Alexa-enabled or Google Assistant-enabled device (sold separately) with the respective app installed.

Setup:

1. Open the eufy app.
2. Tap the ☰ icon > **Third Party Services**.
3. Follow the on-screen instructions to link your Apple, Alexa or Google account.

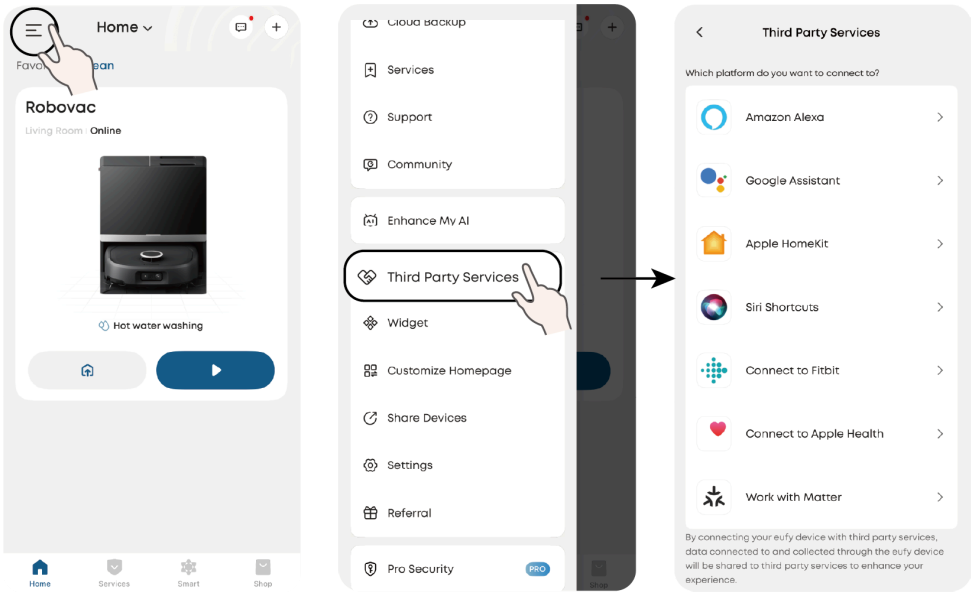

5. Enabling / Disabling Child Safety Lock

Tap the ⚙ icon > **More Settings** > **Child Safety Lock**.

Once the child safety lock is enabled, all buttons will be locked to prevent children from damaging the device or accidentally getting hurt.

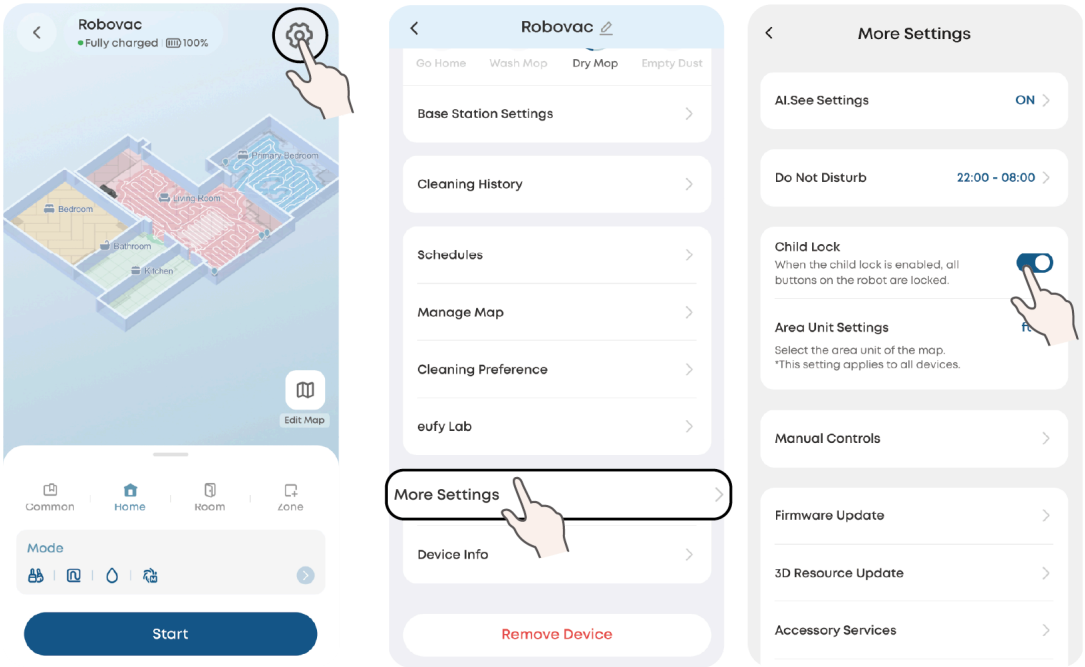

6. Cleaning and Maintenance

Power off the robot and unplug the station before cleaning or maintenance.

> 💡 Do not spray or pour water, cleaning agents, or any liquid onto the RoboVac, the Omni Station, the power cord, or the charging contacts. Use a slightly damp (almost dry) soft cloth for exterior wiping only, and ensure no moisture enters any openings.

Recommended Cleaning and Replacement Schedule

	Part	Clean	Replace
Robot	Dirty Water Reservoir	Monthly	—
	Roller Mop	Monthly	Every 3–6 months
	High-Performance Filter	Monthly	Every 3–6 months
	Metal Filter	Monthly	—
	DuoSpiral™ Brushes	Monthly	Every 3–6 months
	Side Brushes	Monthly	Every 3–6 months
	Brush Guard	Monthly	Every 3–6 months (or when visibly worn)
	Sensors & Camera	Monthly	—
	Charging Contacts	Monthly	—
	Swivel Wheel	Monthly	—
Omni Station	Dust Bag	—	Every 1–2 months
	Floor Cleaning Solution	—	Every 1–2 months
	Clean Water Tank	As needed	—
	Dirty Water Tank	As needed	—

6.1 Clean the Dustbin and Filter

1. Remove the top cover and take out the dust bin.

2. Rotate to open the dust bin, and separate the metal and high-performance parts of the filter.
3. Empty the dust bin.
4. Rinse and air-dry completely before next use.
5. Reinstall the filter.
6. Place the dust bin and the top cover back into the machine.

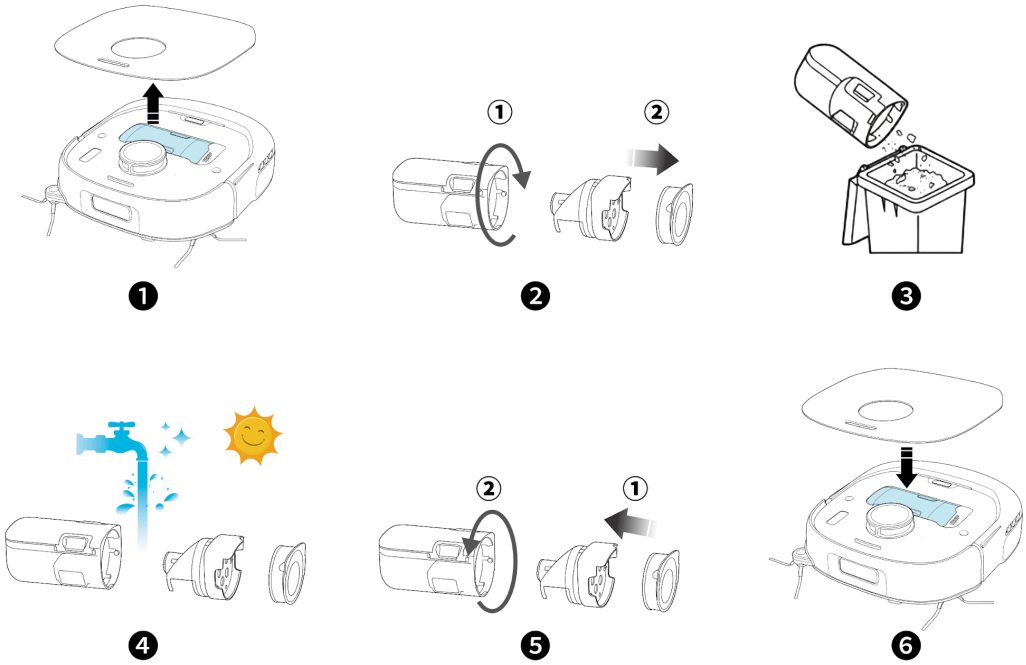

6.2 Clean the Dirty Water Reservoir

1. Open the top cover of the robot, and press the **Water Tank** button (Dirty Water Reservoir Release Button) to release the dirty water reservoir.
2. Open the lid, then remove the 2 filters.
3. Use a cleaning brush (not included) to remove dirt and debris from the inside of the tank and around the corners.
4. Rinse and air-dry completely before next use.
5. Install the filters back into place, then close the lid securely.
6. Put the dirty water reservoir back into the RoboVac and close the top cover.

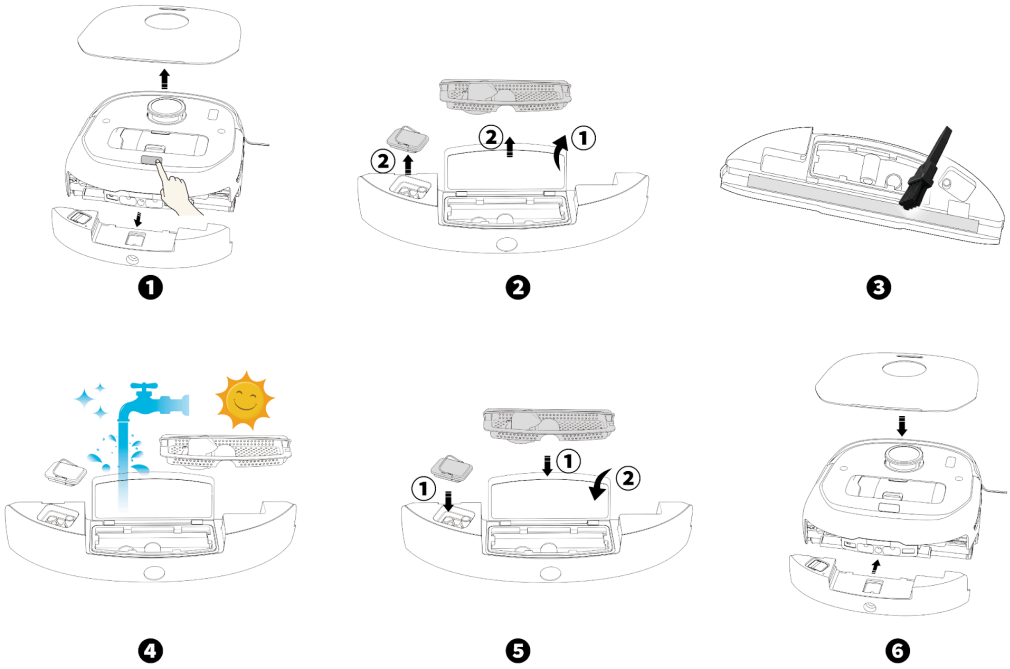

6.3 Replace the Roller Mop

1. Remove the top cover and take out the dirty water reservoir.
2. Flip the robot over, then push the red button at the side of the roller mop to release it.
3. Pull out the roller mop, and clean the debris.
4. Reinsert the roller mop.
5. Press the replacement brush down until it snaps into place.

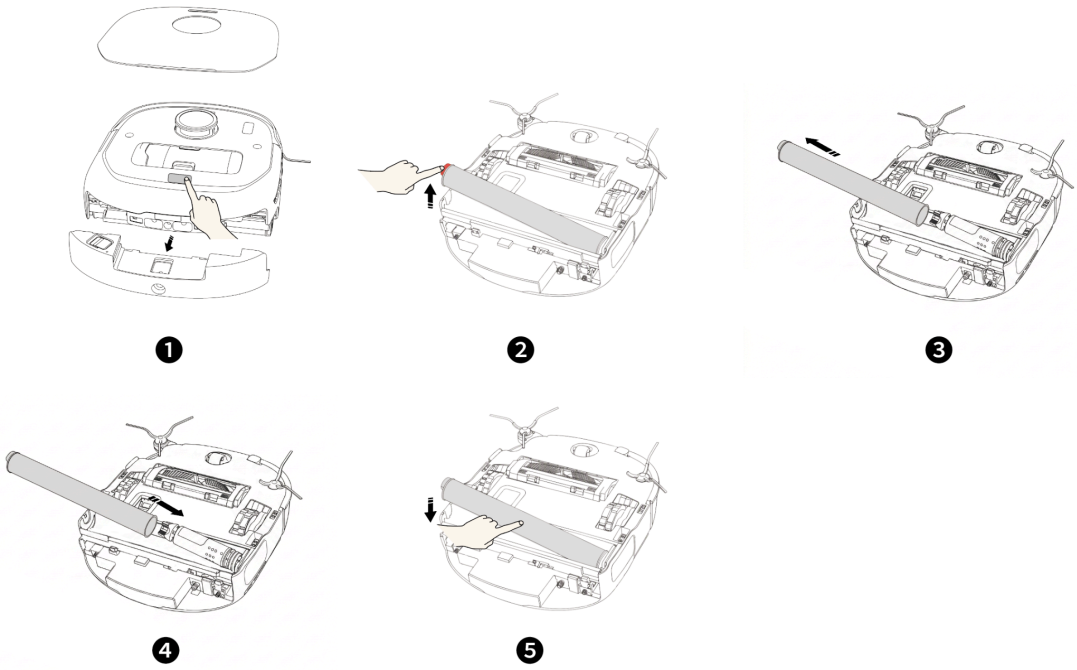

6.4 Clean the DuoSpiral™ Brushes

> ⚠️ Before turning the robot over, remove the dirty water reservoir first.

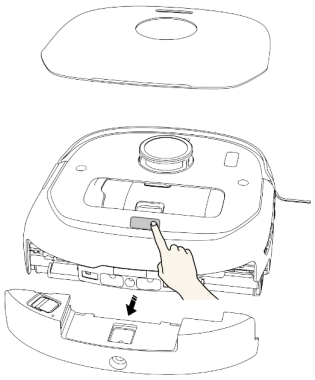

1. Press the release tabs to unlock the brush guard.
2. Push the side of one rolling brush inward and gently flip it up.
3. Gently twist and pull out the rolling brush.
4. Push the side of the other rolling brush inward and gently flip it up.
5. Gently twist and pull out the other rolling brush.
6. Rinse both rolling brushes and brush guard with running water. Air dry completely before next use.
7. Reinstall one side of the rolling brush and snap it into place.
8. Reinstall the other side of the rolling brush and snap it into place.
9. Press down to snap the brush guard into place.

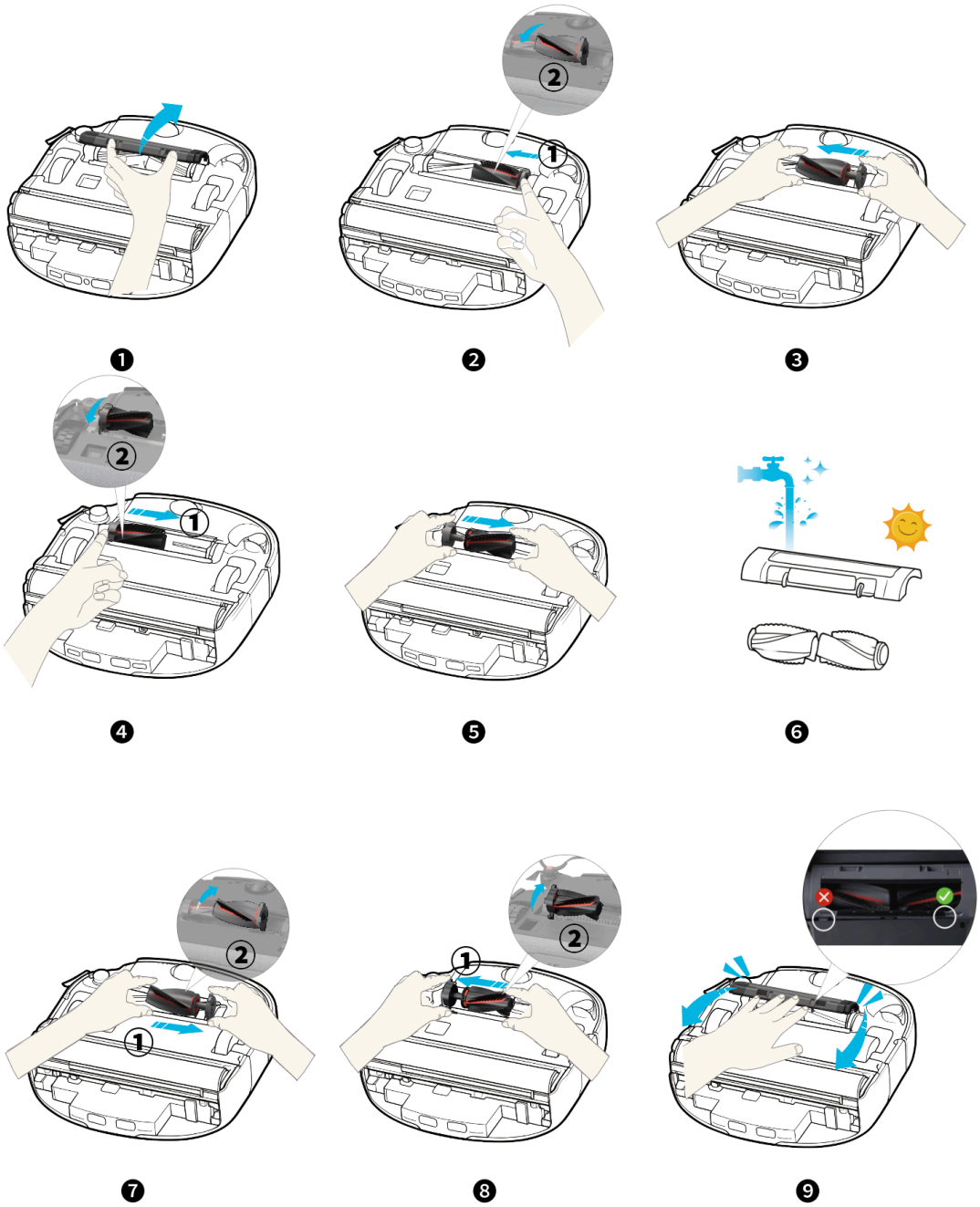

6.5 Clean the Side Brushes

> ⚠️ Before turning the robot over, remove the dirty water reservoir first.

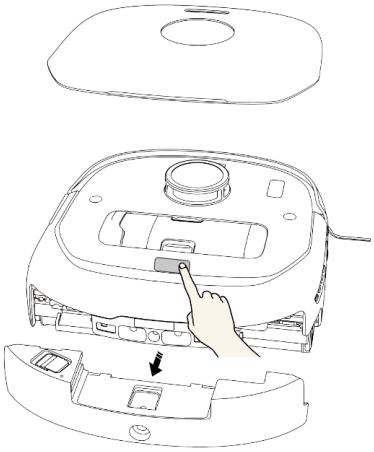

1. Pull to remove the side brushes.
2. Pull off any tangled hair between the brush and the mount.
3. Rinse and air-dry completely before next use.
4. Press to reinstall the side brush on the machine.

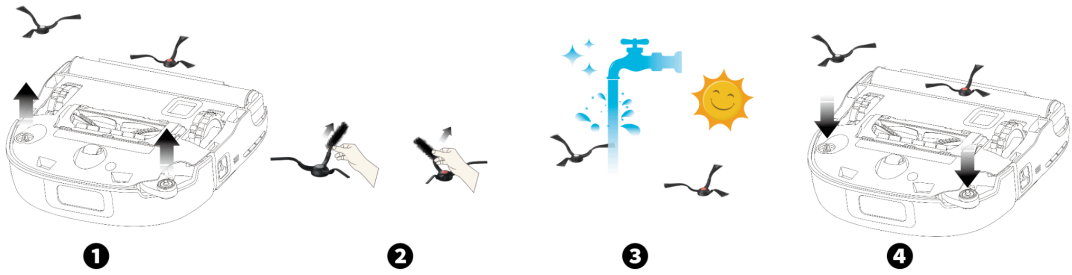

6.6 Replace the Dust Bag

1. Open the dust bag compartment on the station. Pull out and dispose of the sealed bag.
2. Install a new dust bag. Ensure the dust bag is fully inserted, then close the cover.

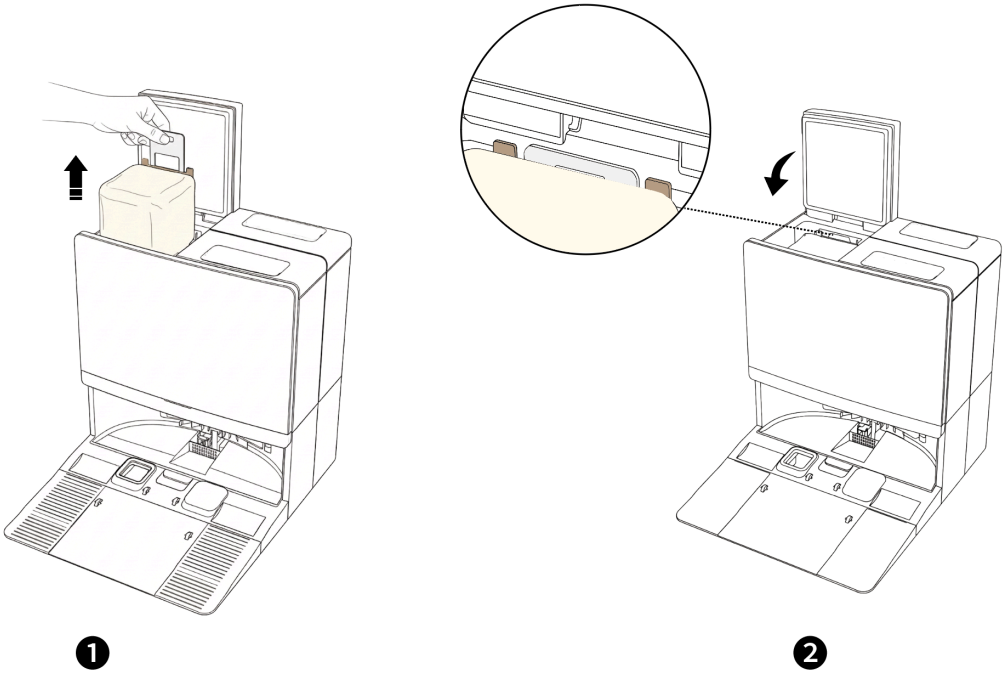

6.7 Clean the Dirty Water Tank

1. Take out the dirty water tank from the Omni Station.
2. Empty the dirty water tank.
3. Rinse thoroughly with running water.
4. Reinsert the tank into the station.

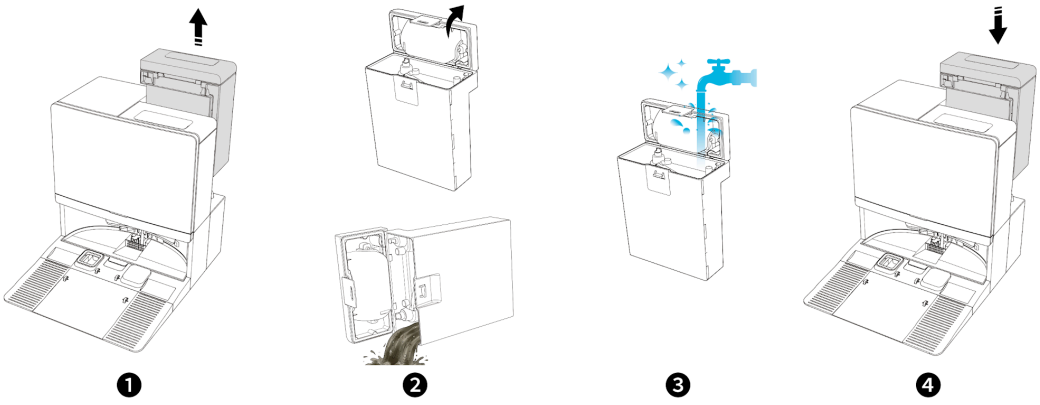

6.8 Clean the Filter Tray

1. Remove the filter tray from the Omni Station.
2. Rinse the tray thoroughly with water.

3. Place the tray back into the station.

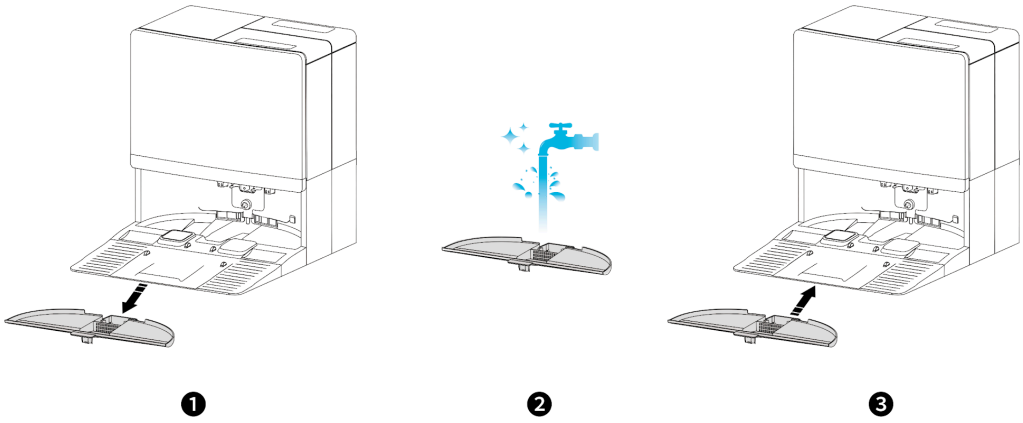

6.9 Clean the Sensors, Camera, and Charging Contacts

To maintain the best performance, clean the sensors and charging contact pins regularly.

> ⚠️ Before turning the robot over, remove the dirty water reservoir first.

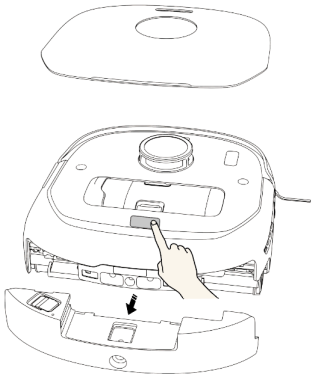

Dust off the cameras, sensors and charging contact pins with a soft cloth.

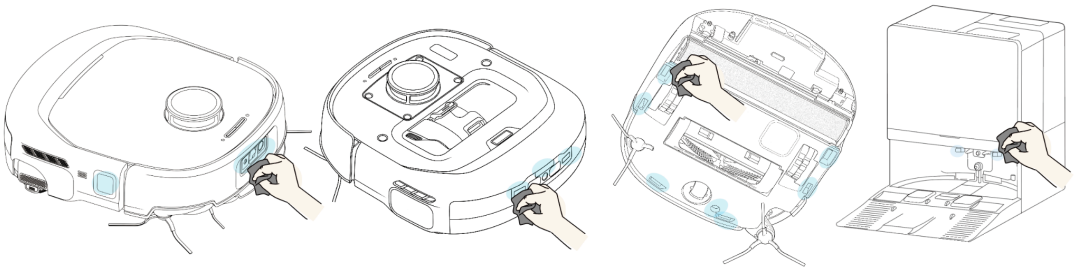

7. Troubleshooting

When an error occurs, refer to in-app instructions for solutions. If the problem persists, please contact support@eufy.com for help.

8. Specifications

Suction Power	35 kPa
Battery Capacity	5200 mAh
Runtime	Up to 188 minutes (quiet mode)
Charging Time	3.5 hours
Input Voltage	100 to 240 V, 50 to 60 Hz
Output	20 V / 1.2 A
Roller Mop Length	290 mm
Mop Downforce	16 N
Mop Extension	32 mm
Obstacle Clearance	30 mm
Carpet Clearance	26 mm
Water Resistance	Not rated. Do not expose to liquids beyond normal mopping operation.
Dust Bag Capacity	2.5 L
Clean Water Tank	2.5 L
Dirty Water Tank	2.4 L
Noise Level (Quiet Mode)	64 dBA
Wi-Fi	2.4 GHz

9. Customer Service

For support, FAQs, and troubleshooting guides:

- Website: www.eufy.com/support
- Email: support@eufy.com

10. Other Information

Network Configuration Instructions

Network Configuration Process:

By default, the device is configured via BLE (Bluetooth Low Energy) through the mobile app. If the BLE configuration fails, a button to try another configuration method (AP mode) will appear.

1. BLE (Bluetooth Low Energy) Configuration:

Trigger Condition:

Activate Bluetooth network configuration by pressing the device's reset button.

Status Description:

When the device is not yet connected to a network, it will automatically enable BLE broadcasting and activate BLE services to provide Bluetooth-based network configuration.

2. AP (Access Point) Configuration:

Trigger Condition:

Activate AP network configuration by pressing the device's reset button.

Status Description:

When the device is not yet connected to a network, it will broadcast an open (no password) and visible AP hotspot to provide network configuration via AP mode.

The device will:

- Listen to network configuration requests on TCP port 9668.

Note:

During the BLE and AP configuration processes, please ensure your network environment is stable and follow the instructions to complete the setup. If you encounter any issues, you can press the reset button again to restart the configuration process.

IMPORTANT SAFETY INSTRUCTIONS

When using an electrical appliance, basic precautions should always be followed, including the following:

READ ALL INSTRUCTIONS BEFORE USING THIS APPLIANCE

WARNING

To reduce the risk of fire, electric shock, or injury:

- Do not leave this appliance when plugged in. Unplug from outlet when not in use and before servicing.
- Do not use as a toy. Close attention is necessary when used by or near children.
- Use only as described in this manual. Use only manufacturer's recommended attachments.
- Do not use with a damaged cord or plug. If this appliance is not working as it should, has been dropped, damaged, left outdoors, or dropped into water, return it to a service center.
- Do not pull or carry by the cord, use the cord as a handle, close a door on the cord, or pull the cord around sharp edges or corners. Do not run the appliance over the cord. Keep the cord away from heated surfaces.
- Do not unplug by pulling on the cord. To unplug, grasp the plug, not the cord.
- Do not handle the plug or appliance with wet hands.
- Do not put any object into openings. Do not use with any opening blocked; keep free of dust, lint, hair, and anything that may reduce air flow.
- Keep hair, loose clothing, fingers, and all parts of body away from openings and moving parts.
- Turn off all controls before unplugging.
- Exercise extra care when cleaning on stairs. If there is a drop-off in the cleaning area due to a step or stairs, you should operate the appliance to ensure that it can detect the step without falling over the edge. It may be necessary to place a physical barrier at the edge to keep the appliance from falling. Make sure the physical barrier is not a trip hazard.
- Do not use to pick up flammable or combustible liquids, such as gasoline, or use in areas where these liquids may be present.
- Do not pick up anything that is burning or emitting smoke, such as cigarettes, matches, or hot ashes.
- Do not use without dust bag, water tank or filters in place.
- ⌂: The appliance is intended for household and indoor use. Do not use outdoors or on wet surfaces.

- Read all safety warnings and instructions. Failure to follow the warnings and instructions may result in electric shock, fire and/or serious injury.
- Prevent unintentional starting of the appliance. Ensure the switch is in the off-position before picking up or carrying the appliance. Carrying the appliance with your finger on the switch or energizing the appliance that has the switch on can lead to accidents.
- Use appliances only with specifically designated battery packs. Use of any other battery packs may lead to risk of injury and fire.
- When the battery pack is not in use, keep it away from other metal objects, like paper clips, coins, keys, nails, screws or other small metal objects, that can make a connection from one terminal to another. Shorting the battery terminals together may cause burns or a fire.
- Under abusive conditions, liquid may be ejected from the battery; avoid contact. If contact accidentally occurs, flush with water. If liquid contacts eyes, seek medical help at once. Liquid ejected from the battery may cause irritation or burns.
- Do not use a battery pack or appliance that is damaged or modified. Damaged or modified batteries may exhibit unpredictable behavior resulting in fire, explosion or risk of injury.
- Do not expose a battery pack or appliance to fire or excessive temperature. Exposure to fire or temperature above 130°C/266°F may cause explosion.
- Follow all charging instructions and do not charge the appliance outside of the temperature range specified in the instructions. Charging improperly or at temperatures outside of the specified range may damage the battery and increase the risk of fire.
- Have servicing performed by a qualified repair person using only identical replacement parts. This will ensure that the safety of the product is maintained.
- Do not modify or attempt to repair the appliance or the battery pack except as indicated in the instructions for use and care.
- Charging, using and storing of the appliance should be within a room temperature range of 5-40°C/41-104°F.
- Place the cords from other appliances out of the area to be cleaned. Do not operate the vacuum in a room where an infant or child is sleeping.
- Do not operate the appliance in an area where there are lit candles or fragile objects on the floor to be cleaned. Do not operate the vacuum in a room that has lit candles on furniture that the vacuum may accidentally hit or bump into. Do not allow children to sit on the vacuum. Do not use the vacuum on a wet surface.

- The appliance can be used by children aged 8 years and above and persons with reduced physical, sensory or mental capabilities or lack of experience and knowledge, if they have been given supervision or instruction concerning use of the appliance in a safe way and understand the hazards involved. Children should not play with this appliance. Cleaning and user maintenance should not be implemented by children without supervision.
- If the supply cord is damaged, it must be replaced by the manufacturer, its service agent or similarly qualified persons in order to avoid hazard.
- The appliance contains batteries that are only replaceable by skilled persons.
- The plug must be removed from the socket-outlet before cleaning or maintaining the station.
- A hazard may occur if the appliance runs over the supply cord.
- WARNING: For the purposes of recharging the battery, only use the T210M station provided with this appliance.
- The Station is only to be used with Robot Vacuum Omni E35 cleaners. Do not use the Station with other units or recharge non-rechargeable batteries. A Station that is suitable for one type of battery pack may create a risk of fire when used with another battery pack.
- The appliance is not to be used if it has been dropped, if there are visible signs of damage or if it is leaking.
- Do not use non-rechargeable batteries. Replace only with the battery model: C0914D8. Before removing the battery, turn off this appliance. To remove the battery, first unscrew the screws on the bottom, then remove the back cover. Disconnect the battery connector to remove the battery. The connector of the battery only fits one way. If the connector does not fit during the connection, reverse the connector. The used battery should be placed in a sealed plastic bag and disposed of safely according to local environmental regulations.
- To enter CEC and ERP modes (low power mode), when the robot is in the station, press and hold the recharge button for 14 seconds. The light will flash at a frequency of once per second, indicating it has entered CEC and ERP modes. Press and hold the power button for 2 seconds to exit CEC and ERP modes.
- This appliance is not intended for use by persons (including children) with reduced physical, sensory or mental capabilities, or lack of experience and knowledge, unless they have been given supervision or instruction concerning use of the appliance by a person responsible for their safety. Children should be supervised to ensure that they do not play with the appliance.
- Be aware of the potential trip hazard in the area an automatic floor cleaner is being operated.

- CAUTION: In order to avoid a hazard due to inadvertent resetting of the thermal cut-out, this appliance must not be supplied through an external switching device, such as a timer, or connected to a circuit that is regularly switched on and off by the utility.

(For US/CA) Connect to a properly grounded outlet only. See Grounding Instructions.

GROUNDING INSTRUCTIONS

- This appliance must be grounded. If it should malfunction or breakdown, grounding provides a path of least resistance for electric current to reduce the risk of electric shock. This appliance is equipped with a cord having an equipment-grounding conductor and grounding plug. The plug must be inserted into an appropriate outlet that is properly installed and grounded in accordance with all local codes and ordinances.
- WARNING – Improper connection of the equipment-grounding conductor can result in a risk of electric shock. Check with a qualified electrician or service person if you are in doubt as to whether the outlet is properly grounded. Do not modify the plug provided with the appliance – if it will not fit the outlet, have a proper outlet installed by a qualified electrician.
- This appliance is for use on a nominal 120-V circuit and has a grounding attachment plug that looks like the plug illustrated in sketch A in the figure below. Make sure that the appliance is connected to an outlet having the same configuration as the plug. No adapter should be used with this appliance.

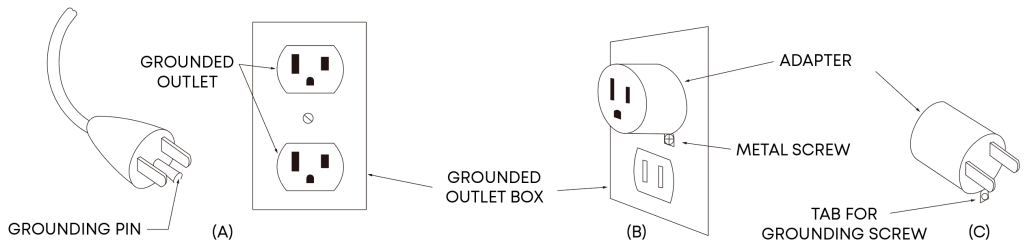

Environmental Notice

- The built-in lithium-ion batteries of this robot vacuum contain chemicals that may pollute the environment.
- Before disposing of this product, ask a professional to remove the batteries and then discard them at an appropriate recycling facility.
- The battery must be removed from the appliance before it is scrapped.
- The appliance must be disconnected from the supply mains when removing the battery.
- The battery is to be disposed of safely.

SAVE THESE INSTRUCTIONS

Notice



This symbol on the device or its packaging indicates:

Do not dispose of electrical appliances as unsorted municipal waste; use separate collection facilities. Contact your local authorities for information regarding the collection systems available. If electrical appliances are disposed of in landfills or dumps, hazardous substances can leak into the groundwater and get into the food chain, damaging your health and well-being. When replacing old appliances with new ones, the retailer is legally obliged to take back your old appliance for disposal free of charge.

FCC Statement

This device complies with Part 15 of the FCC Rules. Operation is subject to the following two conditions: (1) this device may not cause harmful interference, and (2) this device must accept any interference received, including interference that may cause undesired operation.

Warning: Changes or modifications not expressly approved by the party responsible for compliance could void the user's authority to operate the equipment.

Note: This equipment has been tested and found to comply with the limits for a Class B digital device, pursuant to Part 15 of the FCC Rules. These limits are designed to provide reasonable protection against harmful interference in a residential installation.

This equipment generates, uses, and radiates radio frequency energy and, if not installed and used in accordance with the instructions, may cause harmful interference to radio communications. However, there is no guarantee that interference will not occur in a particular installation. If this equipment does cause harmful interference to radio or television reception, which can be determined by turning the equipment on and off, the user is encouraged to try to correct the interference by one or more of the following measures: (1) Reorient or relocate the receiving antenna. (2) Increase the separation between the equipment and receiver. (3) Connect the equipment into an outlet on a circuit different from that to which the receiver is connected. (4) Consult the dealer or an experienced radio / TV technician for help.

The following importer is the responsible party (for FCC matters only).

Company Name: POWER MOBILE LIFE, LLC

Address: 10800 NE 8TH ST #900, BELLEVUE, WA, 98004, UNITED STATES

Telephone: +1 (800) 994 3056

FCC RF Exposure Compliance Statement

This equipment complies with the FCC/IC radiation exposure limits set forth for an uncontrolled environment. This equipment should be installed and operated with a minimum

distance of 20cm between the radiator and your body.

ISED Compliance Statement

This device contains licence-exempt transmitter(s)/receiver(s) that comply with Innovation, Science and Economic Development Canada's licence-exempt RSS(s). Operation is subject to the following two conditions:

1. This device may not cause interference.
2. This device must accept any interference, including interference that may cause undesired operation of the device.

This equipment must be installed and operated in accordance with provided instructions and the antenna(s) used for this transmitter must be installed to provide a separation distance of at least 20 cm from all persons and must not be collocated or operating in conjunction with any other antenna or transmitter.

Laser Safety Information

The laser sensor in this product meets the IEC 60825-1: 2014 and EN 60825-1:2014/A11:2021 Standard for Class 1 laser products. Please avoid direct eye contact with it during use.

CLASS 1 LASER PRODUCT

CONSUMER LASER PRODUCT EN 50689:2021

EU Declaration of Conformity

This product complies with the radio interference requirements of the European Community. Hereby, Anker Innovations Limited declares that the radio equipment type T210M is in compliance with Directive 2014/53/EU. The full text of the EU Declaration of Conformity is available at the following website:

https://support.eufy.com/s/articleRecommend?type=DownLoad&secondType=doc.

Maximum output power is less than 20 dBm (For EU)

Frequency band: 2.4G band (2.4000GHz - 2.4835GHz)

GB Declaration of Conformity

Hereby, Anker Innovations Limited declares that the product type T210M is in compliance with Radio Equipment Regulations 2017 and The Restriction of the Use of Certain Hazardous Substances in Electrical and Electronic Equipment Regulations 2012. The full text of the GB Declaration of Conformity is available at the following website: https://support.eufy.com/s/articleRecommend?type=DownLoad&secondType=doc.

The following importer is the responsible party for EU and UK matters.

ANKER TECHNOLOGY (UK) LTD

39 Clarendon Road, Watford, Hertfordshire, England, WD17 1JA, United Kingdom

Anker Innovations (Malta) CO.LTD

Villa Malitah, Mediterranean Street, The Village St.Julian's STJ 1870 Malta

Manufacturer:

Anker Innovations Limited

Unit 56, 8th Floor, Tower 2, Admiralty Centre, 18 Harcourt Road, Hong Kong

UK PSTI Statement

Hereby, Anker Innovations Limited declares that this device is in compliance with the Product Security and Telecommunications Infrastructure (Security Requirements for Relevant Connectable Products) Regulations 2023. For the statement of compliance, visit the website: https://www.eufy.com/uk/psti-related.

Trademark Notice

Amazon, Echo, Alexa and all related logos are trademarks of Amazon.com, Inc. or its affiliates.

Apple and the Apple logo are trademarks of Apple Inc., registered in the U.S. and other countries. App Store is a service mark of Apple Inc., registered in the U.S. and other countries.

Google Play and the Google Play logo are trademarks of Google Inc.

Google Home is a trademark of Google Inc.

Australian Smart Device Security Statement

Hereby, Anker Innovations Limited declares that this device is in compliance with the Cyber Security (Security Standards for Smart Devices) Rules 2025. For the Statement of Compliance, visit the website: https://passport.eufy.com/au/ssfsd-related.